# MAINTENANCE MANUAL

## AQUILA AT01 (A210)

Doc.-No. MM-AT01-1020-100

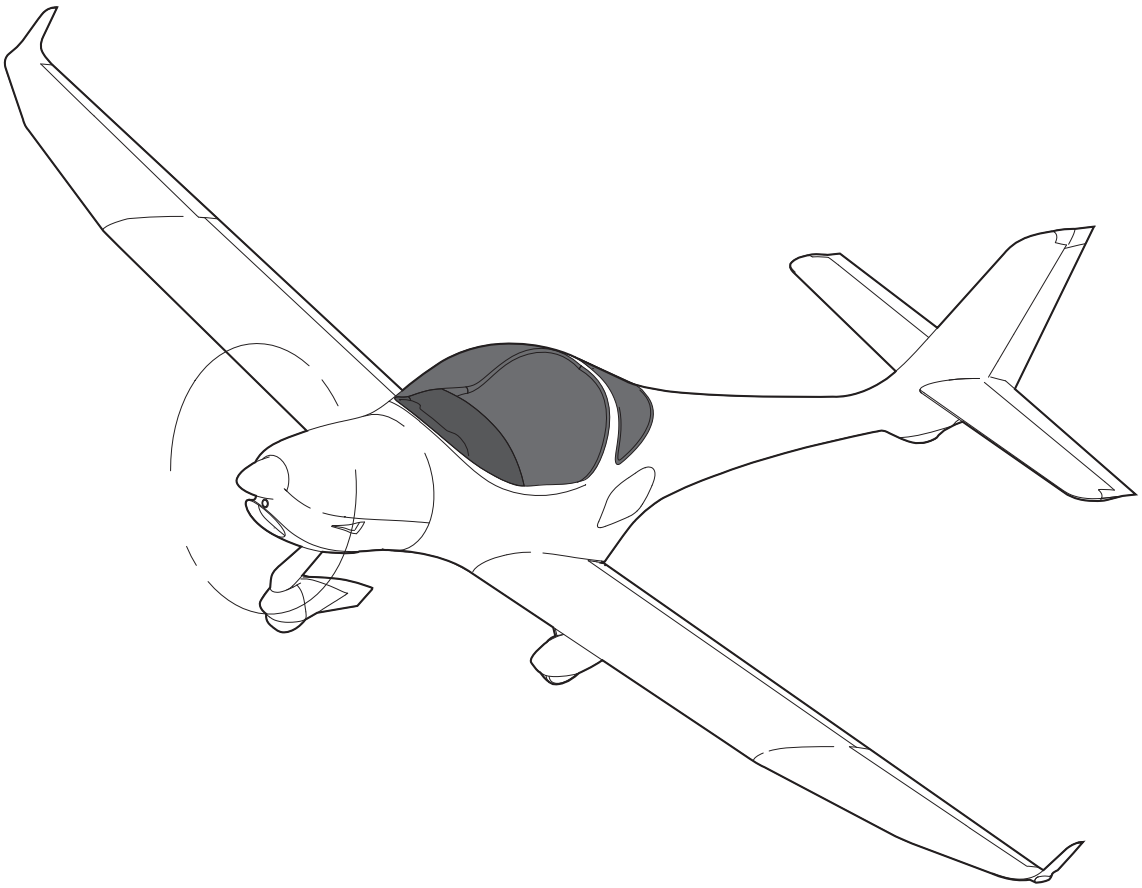

This document is protected by copyright. All associated rights, in particular those of translation, reprinting, reproduction by photo mechanical or similar means and storing in data processing facilities in whole or part are reserved.
The technical content of this document is approved under the authority of the DOA ref. EASA.21J.025.

AQUILA Aviation International GmbH
Flugplatz
14959 Schönhagen

Phone: +49 33 731 707 - 0
Fax: +49 33 731 707 - 11
e-mail: support@aquila-aviation.de
occurence@aquila-aviation.de

# TABLE OF CONTENTS


| Cha/Sec/Sub | Title | Pages |
|---|---|---|
| | TABLE OF CONTENTS | 1-6 |
| | INTRODUCTION | 1-8 |
| | LIST OF EFFECTIVE CHAPTERS | 1-2 |
| 04 | AIRWORTHINESS LIMITATIONS | |
| 04-00-00 | Airworthiness Limitations - General | 1-2 |
| 05 | TIME LIMITS / MAINTENANCE CHECKS | |
| 05-00-00 | Time Limits / Maintenance Checks - General | 1 |
| 05-10-00 | Component Time Limits | 1-3 |
| 05-20-00 | Scheduled Maintenance Checks | 1-29 |
| 05-30-00 | Daily Inspections | 1 |
| 05-50-00 | Unscheduled Maintenance Checks | 1-2 |
| 06 | DIMENSIONS AND AREAS | |
| 06-00-00 | Dimensions and Areas - General | 1 |
| 06-10-00 | Aircraft Dimensions and Areas | 1-3 |
| 06-20-00 | Aircraft Zoning | 1-2 |
| 06-30-00 | Access/Inspection Plates | 1-2 |
| 07 | LIFTING AND SHORING | |
| 07-00-00 | Lifting and Shoring - General | 1 |
| 07-10-00 | Jacking | 201-202 |
| 08 | LEVELING AND WEIGHING | |
| 08-00-00 | Leveling and Weighing - General | 1 |
| 08-10-00 | Weighing | 201-203 |
| 08-20-00 | Leveling | 201-202 |
| 09 | TOWING AND TAXIING | |
| 09-00-00 | Towing and Taxiing - General | 1 |
| 09-10-00 | Towing | 201-202 |
| 09-20-00 | Taxiing | 201 |
| 10 | PARKING, MOORING, STORAGE AND RETURN TO SERVICE | |
| 10-00-00 | Parking, Mooring, Storage and Return to Service - General | 1 |
| 10-10-00 | Parking | 201 |
| 10-11-00 | Storage | 201-202 |
| 10-20-00 | Mooring | 201 |
| 10-30-00 | Return to Service | 201 |

## TABLE OF CONTENTS (Cont.)


| Cha/Sec/Sub | Title | Pages |
|---|---|---|
| 11 | PLACARDS AND MARKINGS | |
| 11-00-00 | Placards and Markings - General | 1 |
| 11-20-00 | Exterior Placards and Markings | 201-207 |
| 11-30-00 | Interior Placards and Markings | 201-207 |
| 12 | SERVICING | |
| 12-00-00 | Servicing - General | 1 |
| 12-10-00 | Replenishing - Description | 1-2 |
| 12-11-00 | Fuel - Servicing | 301-302 |
| 12-12-00 | Engine Oil - Servicing | 301-302 |
| 12-13-00 | Induction Air Filter - Servicing | 301 |
| 12-14-00 | Cooling System - Servicing | 301-302 |
| 12-15-00 | Brake System - Servicing | 301 |
| 12-16-00 | Tires - Servicing | 301 |
| 12-17-00 | Battery - Servicing | 301 |
| 12-20-00 | Scheduled Servicing - Description | 1 |
| 12-21-00 | Lubricants - Description | 1-2 |
| 12-22-00 | Lubrication - Servicing | 301-303 |
| 12-23-00 | Aircraft Exterior - Cleaning and Care | 701-704 |
| 12-24-00 | Aircraft Interior - Cleaning and Care | 701-702 |
| 12-30-00 | Unscheduled Servicing | 301 |
| 20 | STANDARD PRACTICES AIRFRAME | |
| 20-00-00 | Standard Practices Airframe - General | 1 |
| 20-10-00 | Fastener Identification and Torque Data | 1-4 |
| 20-11-00 | Conversion Data | 1-3 |
| 21 | VENTILATION AND HEATING | |
| 21-00-00 | Ventilation and Heating - General | 1 |
| 21-20-00 | Fresh Air Distribution - Description | 1 |
| 21-20-00 | Fresh Air Distribution - Maintenance | 201 |
| 21-40-00 | Heating - Maintenance | 201 |
| 23 | COMMUNICATIONS | |
| 23-00-00 | Communications - General | 1 |
| 23-10-00 | Speech Communication - Description | 1-2/2/2[1)] |
| 23-10-00 | Speech Communication - Maintenance | 201-202/202/202[1)] |
| 23-50-00 | Audio Integrating - Maintenance | 201-202/202[1)] |
| 24 | ELECTRICAL POWER | |
| 24-00-00 | Electrical Power - General | 1 |
| 24-00-00 | Electrical Power - Troubleshooting | 101-102 |
| 24-20-00 | Alternator System - Description | 1-2 |
| 24-20-00 | Alternator System - Maintenance | 201-204 |


1) Depending on effectivity.

## TABLE OF CONTENTS (Cont.)


| Cha/Sec/Sub | Title | Pages |
|---|---|---|
| 24-30-00 | Battery System - Description | 1-2 |
| 24-30-00 | Battery System - Maintenance | 201-203 |
| 24-40-00 | External Power - Maintenance | 201-203 |
| 24-60-00 | Electrical Load Distribution - Description | 1 |
| 24-61-00 | Circuit Breaker - Maintenance | 201 |
| 24-97-00 | Electrical System Wiring - Maintenance | 201 |
| 25 | EQUIPMENT / FURNISHINGS | |
| 25-00-00 | Equipment / Furnishings - General | 1 |
| 25-10-00 | Seats - Maintenance | 201-203 |
| 25-11-00 | Restraint System - Maintenance | 201 |
| 25-12-00 | Cabin Interior - Maintenance | 201-203 |
| 25-50-00 | Cargo Tie Downs - Maintenance | 201 |
| 25-60-00 | Emergency Equipment - Description | 1-2 |
| 25-62-00 | Emergency Locater Transmitter - Maintenance | 201-202 |
| 25-66-00 | Fire Extinguisher - Maintenance | 201-201/202[1)] |
| 27 | FLIGHT CONTROLS | |
| 27-00-00 | Flight Controls - General | 1 |
| 27-10-00 | Aileron Control System - Description | 1-2 |
| 27-10-00 | Aileron Control System - Maintenance | 201-207 |
| 27-20-00 | Rudder Control System - Description | 1-2 |
| 27-20-00 | Rudder Control System - Maintenance | 201-205 |
| 27-30-00 | Elevator Control System - Description | 1-2 |
| 27-30-00 | Elevator Control System - Maintenance | 201-205 |
| 27-31-00 | Elevator Trim Control System - Description | 1-2 |
| 27-31-00 | Elevator Trim Control System - Maintenance | 201-202 |
| 27-50-00 | Flap Control System - Description | 1-2 |
| 27-50-00 | Flap Control System - Maintenance | 201-205 |
| 28 | FUEL | |
| 28-00-00 | Fuel - General | 1-2 |
| 28-10-00 | Fuel Storage - Maintenance | 201 |
| 28-20-00 | Fuel Distribution - Maintenance | 201-205 |
| 28-41-00 | Fuel Quantity Indication - Maintenance | 201-206 |
| 31 | INDICATING / RECORDING SYSTEMS | |
| 31-00 00 | Indicating / Recording Systems - General | 1-2/2/2[1)] |
| 31-10-00 | Instrument Panel - Maintenance | 201-202 |
| 31-30-00 | Recorders - Maintenance | 201-204 |


1) Depending on effectivity.

## TABLE OF CONTENTS (Cont.)


| Cha/Sec/Sub | Title | Pages |
|---|---|---|
| 32 | LANDING GEAR | |
| 32-00-00 | Landing Gear - General | 1 |
| 32-10-00 | Main Landing Gear - Description | 1 |
| 32-10-00 | Main Landing Gear - Maintenance | 201-202 |
| 32-20-00 | Nose Landing Gear - Description | 1 |
| 32-20-00 | Nose Landing Gear - Maintenance | 201-204 |
| 32-40-00 | Wheels and Brakes - Description | 1 |
| 32-40-00 | Wheels and Brakes - Maintenance | 201-208 |
| 33 | LIGHTS | |
| 33-00-00 | Lights - General | 1 |
| 33-10-00 | Interior Lights - Maintenance | 201-202 |
| 33-40-00 | Exterior Lights - Maintenance | 201-203/202[1)] |
| 34 | NAVIGATION | |
| 34-00-00 | Navigation - General | 1 |
| 34-11-00 | Pitot / Static System - Description | 1-2 |
| 34-11-00 | Pitot / Static System - Maintenance | 201-204 |
| 34-18-00 | Stall Warning System - Description | 1 |
| 34-18-00 | Stall Warning System - Maintenance | 201 |
| 34-20-00 | Attitude and Direction - Maintenance | 201-203 |
| 34-25-00 | Integrated Flight System - Maintenance | 201-204/205[1)] |
| 34-40-00 | Independent Position Determining - Maintenance | 201-201/202/205[1)] |
| 34-45-00 | Collision Warning System - Maintenance | 201-204 |
| 34-50-00 | Dependent Position Determining - Maintenance | 201-202/203[1)] |
| 51 | STRUCTURES | |
| 51-00-00 | Structures - General | 1-2 |
| 51-10-00 | Composite Damage Investigation | 201-203 |
| 51-20-00 | Composite Repair | 201-223 |
| 52 | DOORS | |
| 52-00-00 | Doors - General | 1 |
| 52-10-00 | Canopy - Maintenance | 201-204 |
| 52-30-00 | Baggage Door - Maintenance | 201 |
| 53 | FUSELAGE | |
| 53-00-00 | Fuselage - General | 1 |
| 53-10-00 | Fuselage Main Frame - Description | 1-4 |
| 53-10-00 | Fuselage Main Frame - Maintenance | 201 |
| 53-20-00 | Auxiliary Structure - Description | 1 |


1) Depending on effectivity.

## TABLE OF CONTENTS (Cont.)


| Cha/Sec/Sub | Title | Pages |
|---|---|---|
| 55 | STABILIZERS | |
| 55-00-00 | Stabilizers - General | 1 |
| 55-10-00 | Horizontal Stabilizer - Maintenance | 201 |
| 55-20-00 | Elevator - Maintenance | 201-203 |
| 55-30-00 | Vertical Stabilizer - Maintenance | 201 |
| 55-40-00 | Rudder - Maintenance | 201-202 |
| 56 | WINDOWS | |
| 56-00-00 | Windows - General | 1 |
| 56-10-00 | Flight Compartment Windows - Maintenance | 201-203 |
| 57 | WINGS | |
| 57-00-00 | Wings - General | 1 |
| 57-10-00 | Wing - Maintenance | 201-206 |
| 57-50-00 | Control Surfaces - Maintenance | 201-207 |
| 61 | PROPELLER | |
| 61-00-00 | Propeller - General | 1 |
| 61-00-00 | Propeller - Troubleshooting | 101-103 |
| 61-10-00 | Propeller Assembly - Maintenance | 201-204 |
| 61-20-00 | Propeller Control - Maintenance | 201-205 |
| 71 | POWER PLANT | |
| 71-00-00 | Power Plant - General | 1 |
| 71-00-01 | Engine - Description | 1-3 |
| 71-00-01 | Troubleshooting - Rotax 912S | 101-104 |
| 71-00-01 | Rotax 912S - Maintenance | 201-203 |
| 71-10-00 | Cowling - Maintenance | 201-202 |
| 71-20-00 | Engine Mount - Maintenance | 201 |
| 71-60-00 | Air Induction System - Maintenance | 201 |
| 74 | IGNITION SYSTEM | |
| 74-00-00 | Ignition System - General | 1-2 |
| 74-10-00 | Ignition System - Maintenance | 201-203 |
| 75 | COOLING SYSTEM | |
| 75-00-00 | Cooling System - General | 1-2 |
| 75-00-00 | Cooling System - Maintenance | 201-203 |
| 75-00-01 | Winterization Kit - Maintenance | 201-202 |
| 76 | ENGINE CONTROLS | |
| 76-00-00 | Engine Controls - General | 1 |
| 76-00-00 | Engine Controls - Maintenance | 201-205 |

**TABLE OF CONTENTS (Cont.)**


| Cha/Sec/Sub | Title | Pages |
|---|---|---|
| 77 | ENGINE INDICATING | |
| 77-00-00 | Engine Indicating - General | 1 |
| 77-10-00 | Power Indication - Maintenance | 201-202 |
| 77-20-00 | Temperature Indication - Maintenance | 201 |
| 78 | EXHAUST | |
| 78-00-00 | Exhaust - General | 1 |
| 78-10-00 | Exhaust - Maintenance | 201-202 |
| 79 | OIL | |
| 79-00-00 | Oil - General | 1-2 |
| 79-10-00 | Oil Tank - Maintenance | 201-202 |
| 79-20-00 | Oil Cooler - Maintenance | 201-202 |
| 79-31-00 | Oil Pressure Indication - Maintenance | 201-202 |
| 79-33-00 | Oil Temperature Indication - Maintenance | 201 |
| 80 | STARTING | |
| 80-00-00 | Starting - General | 1 |
| 80-10-00 | Starter - Maintenance | 1 |
| 91 | CHARTS AND DIAGRAMS | |
| 91-00-00 | Charts and Diagrams - General | 1-24 |

## RECORD OF REVISIONS

| Revision Number | Date of Revision | Date Inserted | By | Revision Number | Date of Revision | Date Inserted | By |
|---|---|---|---|---|---|---|---|
| 1 | 01.10.01 | | | 26 | 02.03.15 | | |
| 2 | 29.10.01 | | | 27 | 21.07.15 | | |
| 3 | 05.11.01 | | | 28 | 28.08.15 | | |
| 4 | 07.11.01 | | | 29 | 29.02.16 | | |
| 5 | 26.11.01 | | | 30 | 10.06.16 | | |
| 6 | 01.03.02 | | | 31 | 09.10.18 | | |
| 7 | 15.03.02 | | | 32 | 16.09.19 | | |
| 8 | 22.03.02 | | | 33 | 08.06.22 | | |
| 9 | 14.05.02 | | | 34 | 27.02.26 | | |
| 10 | 18.05.02 | | | | | | |
| 11 | 08.07.02 | | | | | | |
| 12 | 26.04.05 | | | | | | |
| 13 | 28.10.05 | | | | | | |
| 14 | 18.01.06 | | | | | | |
| 15 | 30.04.08 | | | | | | |
| 16 | 15.09.09 | | | | | | |
| 17 | 02.03.10 | | | | | | |
| 18 | 21.06.10 | | | | | | |
| 19 | 25.11.10 | | | | | | |
| 20 | 24.02.11 | | | | | | |
| 21 | 05.11.12 | | | | | | |
| 22 | 19.03.13 | | | | | | |
| 23 | 19.07.13 | | | | | | |
| 24 | 15.08.13 | | | | | | |
| 25 | 30.10.13 | | | | | | |

## RECORD OF TEMPORARY REVISIONS

| Temp. Revision Number | Page | Date of Revision | By | Date Removed | By |
|---|---|---|---|---|---|
| 01 | 05-20-00 p.4 | 24.01.13 | | 19.03.13 | |
| 02 | 05-10-00 p.1 & 2 | 11.06.14 | | 28.08.15 | |
| 03 | 05-20-00 p.7<br>76-10-00 p.203 & 204 | 14.08.14 | | 28.08.15 | |
| 04 | 12-14-00 p.301 & 302<br>75-10-00 p.201<br>79-20-00 p.201 | 27.04.15 | | 08.06.22 | |
| | | | | | |
| | | | | | |
| | | | | | |
| | | | | | |
| | | | | | |
| | | | | | |
| | | | | | |
| | | | | | |
| | | | | | |
| | | | | | |
| | | | | | |
| | | | | | |
| | | | | | |
| | | | | | |
| | | | | | |
| | | | | | |
| | | | | | |
| | | | | | |

## HIGHLIGHTS OF REVISIONS

| Revision Number | Date of Revision | Reason for Revision | Revision Number | Date of Revision | Reason for Revision |
|---|---|---|---|---|---|
| 25 | 30.10.13 | FAA validation: description/maintenance of electrical system, avionics and structures revised; airworthiness limitations; | | | |
| 26 | 02.03.15 | Life time limit, 6000 hour inspection | | | |
| 27 | 21.07.15 | “Fuel” revision; fuel indicating system calibration procedures | | | |
| 28 | 28.08.15 | TBO’s and maintenance checklist revised; Temp. rev. 2 & 3 incorporated | | | |
| 29 | 29.02.16 | Control surface ply lay-up added; repair procedures revised | | | |
| 30 | 10.06.16 | 6000h check & TBOs added; battery check procedure added | | | |
| 31 | 09.10.18 | Rotax: new spark plugs | | | |
| 32 | 16.09.19 | TBO’s and maintenance checklist revised | | | |
| 33 | 08.06.22 | TBO’s and maintenance checklist revised; Temp. rev. 4 incorporated | | | |
| 34 | 27.02.26 | TBO’s and maintenance checklist revised; Rotax 912 maintenance manual updates | | | |
| | | | | | |

# INTRODUCTION

## 1. General

This maintenance manual provides to maintenance personnel all information necessary for the maintenance of the aircraft. It contains detailed descriptions of the systems, troubleshooting and maintenance practices. This handbook only contains maintenance practices to be carried out on the aircraft, e.g. removal and installation of components.
Maintenance, repairs and inspections must be accomplished in accordance with the instructions given in this maintenance manual (MM).

## 2. List of Technical Publications

A. Use the MM in conjunction with the latest revisions of the technical publications listed in table 1.

NOTE: Due to the multiplicity of equipment coming onto the market the following list may be incomplete. If there is no information given on a certain component, use the documentation provided by the manufacturer of this component.

Table 1 - List of Technical Publications

| No. | Title | Manual No. / Part No. | Supplier |
|---|---|---|---|
| 1. | Airplane Flight Manual<br>AQUILA AT01 | FM-AT01-1010-100 | AQUILA Aviation<br>International GmbH |
| 2. | Maintenance Manual (Line) for<br>ROTAX Engine Type 912 Series | MML-912<br>899196 | BRP-Powertrain GmbH & Co KG |
| 3. | Maintenance Manual (Heavy) for<br>ROTAX Engine Types 912 and 914 Series | MMH-912<br>899603 | BRP-Powertrain GmbH & Co KG |
| 4. | Operator's Manual for<br>ROTAX Engine Type 912 Series | OM-912<br>899700 | BRP-Powertrain GmbH & Co KG |
| 5. | Illustrated Parts Catalog for<br>ROTAX Engine Types 912 and 914 Series | IPC-912<br>899473 | BRP-Powertrain GmbH & Co KG |
| 6. | Operation & Installation Manual<br>Hydraulically Controlled Variable Pitch Prop. | E-124 | mt-Propeller Entwicklung GmbH |
| 7. | Operation & Installation Manual<br>Hydraulic Constant Speed Governor<br>P-41()()-() | E-699 | mt-Propeller Entwicklung GmbH |
| 8. | Operation & Installation Manual<br>Hydraulic Constant Speed Governor<br>P-8()()-() | E-1048 | mt-Propeller Entwicklung GmbH |
| 9. | Maintenance Manual<br>Cleveland Wheels and Brakes | AWBCMM0001 | Parker Hannifin Corp. |

Table 1 - List of Technical Publications (Cont.)

| No. | Title | Manual No. / Part No. | Supplier |
|---|---|---|---|
| 10. | Garmin G500 AML STC Installation Manual | 190-01102-06 | Garmin International Inc. |
| 11. | Instructions for Continued Airworthiness G500 PFD/MFD System | 190-01102-00 | Garmin International Inc. |
| 12. | Installation Manual EFD1000 and EFD500 Software Version 2.x | 900-00003-001 | Aspen Avionics Inc. |
| 13. | Instructions for Continued Airworthiness EFD1000 and EFD500 | 900-00012-001 | Aspen Avionics Inc. |
| 14. | Installation Manual GMA 340 Audio Panel | 190-00149-01 | Garmin International Inc. |
| 15. | Pilot's Guide GMA 340 Audio Panel | 190-00149-10 | Garmin International Inc. |
| 16. | Installation Manual GMA 350/350H | 190-01134-11 | Garmin International Inc. |
| 17. | Pilot's Guide GMA 350 | 190-01134-12 | Garmin International Inc. |
| 18. | Maintenance Manual Bendix/King KT 76C ATCRBC Transponder | 006-15545-0002 | Honeywell International Inc. |
| 19. | Installation Manual GTX 328 Transponder | 190-00420-04 | Garmin International Inc. |
| 20. | Installation Manual GTX 330 Transponder | 190-00207-02 | Garmin International Inc. |
| 21. | Installation Manual 400 Series | 190-00140-02 | Garmin International Inc. |
| 22. | Installation Manual 400W Series | 190-00356-02 | Garmin International Inc. |
| 23. | Installation Manual 500 Series | 190-00181-02 | Garmin International Inc. |
| 24. | Installation Manual 500W Series | 190-00357-02 | Garmin International Inc. |
| 25. | Installation Manual GTN 6xx/7xx AML STC | 190-01007 | Garmin International Inc. |
| 26. | Installation Manual Bendix/King KMD 150 MFD/GPS | 006-10607-0000 | Honeywell International Inc. |
| 27. | Installation Manual Flymap L | 500-301 | Stauff Systec GmbH |
| 28. | Installation Manual Model SL30 NAV/COMM | 560-0404-03 | Garmin AT Inc. |

Table 1 - List of Technical Publications (Cont.)

| No. | Title | Manual No. / Part No. | Supplier |
|---|---|---|---|
| 29. | Pilot's Guide<br>SL30 NAV/COMM | 560-0403-01 | Garmin AT Inc. |
| 30. | Installation Manual<br>Model SL40 VHF COMM Transceiver | 560-0956-03 | Garmin AT Inc. |
| 31. | Pilot's Guide<br>SL40 VHF COMM | 560-0954-02 | Garmin AT Inc. |
| 32. | Installation Manual / Operation Manual<br>Kannad 406 AF Compact | DOC 08038<br>Ref. 0145599 | Kannad Aviation Enquiries<br>Orolia SAS |
| 33. | Installation Manual<br>VT-01 Transponder | 01.0200.11E | Garrecht Avionik GmbH |
| 34. | Installation Manual<br>VT-02 Transponder | 02.0200.11E | Garrecht Avionik GmbH |
| 35. | Installation Manual<br>FLARM Collision Warning Unit | --- | FLARM Technology GmbH |
| 36. | Maintenance Manual<br>Bendix/King KX 125 | 5006-05335-0001 | Honeywell International Inc. |
| 37. | Acceptable Methods, Techniques and Practices - Aircraft Inspection and Repair | AC 43.13-1B | Federal Aviation Administration (FAA) |
| 38. | Restraint Systems Model 1-10-()<br>Component Maintenance Manual | CMM 25-22-13 | Schroth Safety Products GmbH |
| 39. | Kannad AF Integra<br>Operation Manual | DOC 09078<br>Ref. 0146257 | Kannad Aviation Enquiries<br>Orolia SAS |
| 40. | Andromeda Aurora<br>Installation Manual | | Aveo Engineering |
| 41. | Ultra Galactica<br>Installation Manual | AVE-WPST-54G-IM | Aveo Engineering |

3. Structure of the Maintenance Manual

The MM has been prepared in accordance with the Air Transport Association (ATA) Specification Number 100 for Manufacturer's Technical Data.

A. Classification of Subject Matter

The MM is divided into 5 major sections. Each of these sections is sub-divided into chapters. A table of contents is provided at the beginning of each MM chapter.

| | | |
|---|---|---|
| (1) | General | Ch. 05 - 12 |
| (2) | Airframe Systems | Ch. 20 - 37 |
| (3) | Structures | Ch. 51 - 57 |
| (4) | Propeller | Ch. 61 |
| (5) | Power Plant | Ch. 71 - 80 |

Each chapter is identified by a separator sheet with the chapter number and the title.

B. Page Numbering System

(1) The page numbering system consists of three-element numbers separated by dashes.

The first element identifies a system:
e.g. 27 Flight Controls (a chapter)

The second element identifis a subsystem in the system:

e.g. 27-30 Elevator (a section)

If the system comprises several subsystems, further sections are added:
e.g. 27 - 31 Elevator Trim Control (a further section)

The last number permits the identification of the individual units in a system or subsystem. However, this number is only used when detailed description of such individual units is required.

Example:

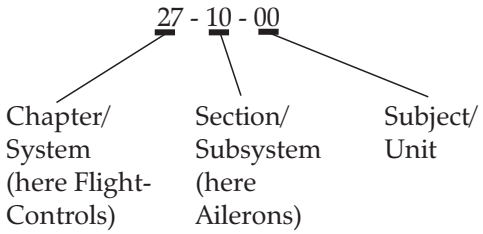

(2) When the chapter/system element number is followed by zeros in the section/subsystem and subject/unit element number (28-00-00), the information is applicable to the entire system.
(3) When the section/subsystem element number is followed by zeros in the subject/unit element number (28-20-00), the information is applicable to subsystem within the system.
(4) The subject/unit element number is used to identify information applicable to units within the subsystems.

This breakdown of the chapters provides a good overview and facilitates the exchange of revised pages. Since most of the systems are relatively simple, the third element is used only in the more complex systems, i.e. if it appears necessary to describe a unit or device in greater detail.

(5) All maintenance data given in the MM is divided into specific types of information. This facilitates work with the manual. For this purpose, page number blocks are reserved depending on type of information.

| | |
|---|---|
| Page 1 - 99 | Description and Operation |
| Page 101 - 199 | Troubleshooting |
| Page 201 - 299 | Maintenance Practices |
| Page 301 - 399 | Servicing |
| Page 401 - 499 | Removal/Installation |
| Page 501 - 599 | Adjustment/Test |
| Page 601 - 699 | Inspection/Check |
| Page 701 - 799 | Cleaning/Painting |
| Page 801 - 899 | Repairs |

Example page number:

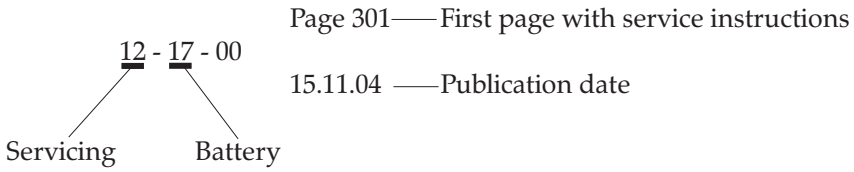


(6) Figures are numbered consecutively within each topic.

| | | |
|---|---|---|
| Example: | Fig. 201 | 1. Illustration for maintenance |
| | Fig. 202 | 2. Illustration for maintenance etc. |

C. Page Order

(1) In the front of the manual:

Title
Table of Contents
Record of Revisions

Record of Temporary Revisions
Highlights of Revisions
Introduction
List of Effective Chapters

(2) Each chapter begins with:

Title
Table of Contents

D. Figures

The figures within the sections of a chapter are numbered in accordance with the appropriate page number block. Numbering begins with one (1) and is continuous.

4. Using the Maintenance Manual

A. To obtain information about a specific system, refer to the list of effective chapters in the front of the manual to find the corresponding chapter number.
In the table of contents of the respective chapter, one then finds more detailed information about the arrangement of material.

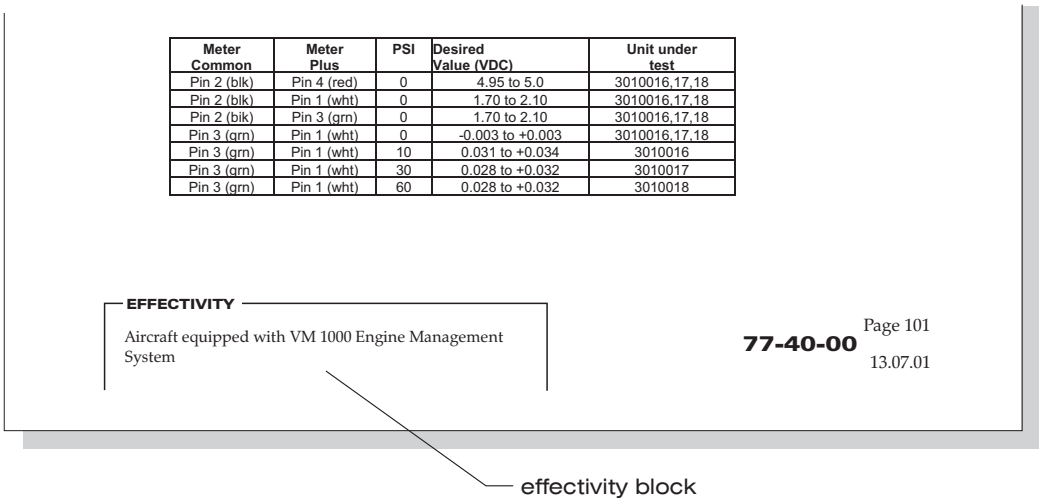

| Meter Common | Meter Plus | PSI | Desired Value (VDC) | Unit under test |
|---|---|---|---|---|
| Pin 2 (blk) | Pin 4 (red) | 0 | 4.95 to 5.0 | 3010016,17,18 |
| Pin 2 (blk) | Pin 1 (wht) | 0 | 1.70 to 2.10 | 3010016,17,18 |
| Pin 2 (bik) | Pin 3 (grn) | 0 | 1.70 to 2.10 | 3010016,17,18 |
| Pin 3 (grn) | Pin 1 (wht) | 0 | -0.003 to +0.003 | 3010016,17,18 |
| Pin 3 (grn) | Pin 1 (wht) | 10 | 0.031 to +0.034 | 3010016 |
| Pin 3 (grn) | Pin 1 (wht) | 30 | 0.028 to +0.032 | 3010017 |
| Pin 3 (grn) | Pin 1 (wht) | 60 | 0.028 to +0.032 | 3010018 |



Effectivity Block
Figure 1

B. Effectivity

This maintenance manual is "customized". It includes the following effectivity identification system to show modification and/or configuration differences.

(1) The MM starts with a list of effective chapters. Each chapter is listed with date of issue or revision.

(2) To identify the aircraft an effectivity statement (i.e. Garmin Avionics) or a six-digit numeric indicator is shown in the effectivity column in the table of contents if applicable.
   (a) The six-digit numeric indicator begins with the last three digits of the lowest assigned number, to indicate first effectivity, and ends with the last three digits of the highest assigned number, to indicate last effectivity, of an unbroken sequence of assigned numbers. A hyphen is shown between the numbers. Open ended effectivity is indicated by "999" in the last effectivity if applicable. For example: 023-999 indicates aircraft 023 and subsequent.

(3) Effectivity Block
The system provides further direct annotation of applicability on the pages. On pages not applicable for all aircraft, an effectivity block appears at the bottom left-hand corner. Effectivity identification may be a six-digit numeric indicator (ref. to (2)(a)) or an effectivity statement (refer to figure 1).
The information on that page applies only to the aircraft noted in the effectivity block.

NOTE: Pages with no effectivity block may be followed by pages with effectivity blocks and vice versa and have identical page numbers.

C. Revisions

(1) Maintenance manual revisions, caused by variety of reasons (regulation changes, technical changes, typographical errors, etc.), will be published regularly.

Revision notification contains a note explaining the revision along with:

- the revised manual chapters
- the reason of revision
- the affected airplane serial numbers

(2) Should a revision be urgently required between regular updating, a temporary revision will be issued. The relevant pages are yellow and will usually be incorporated in the next scheduled revision of the maintenance manual.

(3) Identifying revised material
   (a) Revisions and/or additions will be identified by a vertical black line (revision bar) in the outer margin of the page opposite the text/illustration that has been changed.
   (b) When technical changes result in unaltered texts slipping on to a different page, a revision bar will be placed in the outside margin, opposite the chapter/section/subject, page number and date of all affected pages, providing no other revision bar appears on the page.

(4) Incorporating revisions into the manual

(a) In order to keep track of revisions and to facilitate the use of the manual, a revision always affects the entire chapter, i.e. all pages of a chapter have the same date of issue or revision and the entire chapter is replaced during a revision.

(b) MM revisions contain an effectivity page. Chapters to be removed or inserted are listed in sequence and assigned with the respective action.
Incorporation of revisions into the manual must be documented in the record of revisions at the front of the MM.

(c) Temporary revisions are issued as single pages and must be incorporated according to the notes on the effectivity page delivered with the revision. They become invalid and must be removed when the corresponding permanent revision is issued.

D. WARNINGS, CAUTIONS and NOTES

When carrying out maintenance on the airplane, general safety and maintenance rules should always be observed.
In addition, the MM contains warnings, cautions and notes to highlight or emphasize important and critical instructions.

WARNING:

Hazard for maintenance personnel!

CAUTION:

Hazard for systems and equipment!

NOTE:

Specific information

E. Abbreviations

Where it appears reasonable, abbreviations are used. They conform to recognized standards.

## LIST OF EFFECTIVE CHAPTERS

| Chapter | Title | Date* |
|---|---|---|
| GENERAL | | |
| | Table of Contents | 27.02.26 |
| | Introduction | 08.06.22 |
| 04 | Airworthiness Limitations | 02.03.15 |
| 05 | Time Limits / Maintenance Checks | 27.02.26 |
| 06 | Dimensions and Areas | 08.06.22 |
| 07 | Lifting & Shoring | 30.10.13 |
| 08 | Leveling and Weighing | 27.09.01 |
| 09 | Towing and Taxiing | 02.03.10 |
| 10 | Parking, Mooring, Storage & Return to Service | 02.03.10 |
| 11 | Placards and Markings | 08.06.22 |
| 12 | Servicing | 08.06.22 |
| AIRFRAME SYSTEMS | | |
| 20 | Standard Practices Airframe | 09.10.18 |
| 21 | Ventilation and Heating | 08.07.02 |
| 23 | Communications | 30.10.13 |
| 24 | Electrical Power | 10.06.16 |
| 25 | Equipment and Furnishings | 30.10.13 |
| 27 | Flight Controls | 27.02.26 |
| 28 | Fuel | 21.07.15 |
| 31 | Indicating/Recording Systems | 30.10.13 |
| 32 | Landing Gear | 08.06.22 |
| 33 | Lights | 30.10.13 |
| 34 | Navigation | 30.10.13 |
| STRUCTURES | | |
| 51 | Structures | 29.02.16 |
| 52 | Doors | 30.10.13 |
| 53 | Fuselage | 30.10.13 |
| 55 | Stabilizers | 14.05.02 |
| 56 | Windows | 19.07.13 |
| 57 | Wings | 18.01.06 |
| PROPELLER | | |
| 61 | Propeller | 27.02.26 |

## LIST OF EFFECTIVE CHAPTERS

| Chapter | Title | Date* |
|---|---|---|
| POWER PLANT | | |
| 71 | Power Plant | 26.04.05 |
| 74 | Ignition | 09.10.18 |
| 75 | Cooling System | 08.06.22 |
| 76 | Engine Controls | 28.08.15 |
| 77 | Engine Indicating | 26.11.01 |
| 78 | Exhaust | 07.11.01 |
| 79 | Oil | 08.06.22 |
| 80 | Starting | 05.11.01 |
| 91 | Charts and Wiring Diagrams | 30.04.08 |

* The date refers to the issue / revision date of the respective chapter.

The technical content of this document (revision 34) is approved under the authority of DOA ref. EASA.21J.025.

27.02.26

Date, Signature Office of Airworthiness

# CHAPTER 4

# AIRWORTHINESS LIMITATIONS

## RECORD OF REVISIONS - CHAPTER 4

| Revision Number | Date of Revision | Revised Pages | Descriptions of Revisions | LBA Approval Signature and Date |
|---|---|---|---|---|
| —— | 14.09.01 | —— | Original Issue | 21. Sep. 01 |
| 01 | 20.06.02 | LOEP Page 01<br>LOR Page 01<br>Sec 04-00-01 Page 01, 02 | 1st Revision<br>1st Revision<br>Revised Paragraph 2.B., 2.D. | 31. Juli 02 |
| 02 | 28.10.05 | ROR Page 01<br>TOC Page 01<br>Sec 04-00-01 Page 01 | 2nd Revision<br>1st Revision<br>General Revision | Confirmed: 27. Dez. 05<br>EASA-Approval No: EASA.A.C.017 03 |
| 03 | 30.10.13 | ROR Page 1<br>TOC Page 1<br>Sec 04-00-00 Page 1 | 3rd Revision<br>2nd Revision<br>General Revision (FAA Approval) | |
| 04 | 02.03.15 | ROR Page 1<br>Sec 04-00-00 Page 1 | 4th Revision<br>Life time limit / 6000h inspection | EASA Major Change Approval 10052527 |
| | | | | |

## TABLE OF CONTENTS


| Title | Chapter Section Subject | Page |
|---|---|---|
| AIRWORTHINESS LIMITATIONS - GENERAL | 04-00-00 | 1 |
| Introduction | 04-00-00 | 1 |
| Airworthiness Limitations | 04-00-00 | 1 |

## AIRWORTHINESS LIMITATIONS - GENERAL

1. Introduction

This chapter gives information on mandatory replacement times of structural parts and components and on inspection periods for the airframe structure of the aircraft.
All mandatory limitations listed have been determined by the airframe manufacturer.
Compliance with the specified times and intervals is mandatory for maintaining the airworthiness of the aircraft.

THE AIRWORTHINESS LIMITATIONS CHAPTER IS APPROVED BY EUROPEAN AVIATION SAFETY AGENCY (EASA) IN ACCORDANCE WITH THE APPLICABLE CERTIFICATION PROCEDURES AND THE TYPE CERTIFICATION BASIS.

THE AIRWORTHINESS LIMITATIONS CHAPTER IS FAA APPROVED AND SPECIFIES MAINTENANCE REQUIRED UNDER SECS. 43.16 AND 91.403 OF THE FEDERAL AVIATION REGULATIONS UNLESS AN ALTERNATIVE PROGRAM HAS BEEN FAA APPROVED.

For possible airworthiness limitations of engine, propeller, components and vendor equipment refer to the applicable maintenance data as listed in the “Introduction” chapter of this manual.

2. Airworthiness Limitations

A. Life Time Limit
The airframe of the AQUILA AT01 is limited to **6000 h** of flight time.

An inspection program to reach an extension of replacement time can be obtained from AQUILA Aviation GmbH.

NOTE: The life time limit of 6000 h of flight time will be kept for all models listed in the data sheet. For all S/N’s having performed the 6000 h inspection program and possible maintenance actions resulting thereof, no further life time limit beyond 6000 operating hours will be established. The aircraft is then considered to have “Safe Life”.

B. Component and System Checks
The following table lists maintenance and checks that have to be carried out at the specified intervals. Where an interval is given in both flight time and calendar time, the limit which is reached first must be applied.

| No. | Component / Maintenance Requirement | Reference | Interval 100h | Interval other | Initials |
|---|---|---|---|---|---|
| - | - | - | - | - | |

C. Replacement Requirements
The aircraft components listed below are life limited and must be replaced/overhauled at a specific time. Where an interval is given in both flight time and calendar time, the limit which is reached first must be applied.

| Chapter | Component / Part | Replacement Time | Overhaul |
|---|---|---|---|
| - | - | - | - |

D. Outside Painting of the Airframe
All structural parts which are exposed to direct vertical sunlight and listed in the table below have to be painted WHITE, excepting areas provided for registration marks, warnings and approved designs. This will prevent the temperature of the structure from becoming too high.

| P/N | Component / Part |
|---|---|
| AT01-2100-001 | Fuselage (incl. vertical stabilizer and rudder) |
| AT01-2130-001 | Upper cowling |
| AT01-3000-001 | Horizontal stabilizer (incl. elevator) |
| AT01-4000-001 | Wing (incl. flaps and ailerons) |

For airplanes registered in the USA or countries where the FAA-TC has been accepted, approved coatings / shades are Du Pont PUR EV310 Performance Coating / RAL 9001 and Du Pont PUR EV310 Performance Coating / RAL 9016.
Before painting the aircraft with a different coating AQUILA Aviation GmbH must be contacted.

For airplanes registered in Europe or countries where the EASA-TC has been accepted, approved shades are RAL 9001 and RAL 9016.

# CHAPTER 5

# TIME LIMITS / MAINTENANCE CHECKS

## TABLE OF CONTENTS


| Title | Chapter Section Subject | Page |
|---|---|---|
| TIME LIMITS / MAINTENANCE CHECKS - GENERAL | 05-00-00 | 1 |
| Introduction | 05-00-00 | 1 |
| General Description | 05-00-00 | 1 |
| COMPONENT TIME LIMITS | 05-10-00 | 1 |
| General | 05-10-00 | 1 |
| Component Time Limits | 05-10-00 | 1 |
| SCHEDULED MAINTENANCE CHECKS | 05-20-00 | 1 |
| General | 05-20-00 | 1 |
| Inspection Time Intervals Chart | 05-20-00 | 1 |
| 6000-Hour Inspection | 05-20-00 | 19 |
| DAILY INSPECTIONS | 05-30-00 | 1 |
| General | 05-30-00 | 1 |
| Pre-Flight Check | 05-30-00 | 1 |
| Post-Flight Check | 05-30-00 | 1 |
| UNSCHEDULED MAINTENANCE CHECKS | 05-50-00 | 1 |
| General | 05-50-00 | 1 |
| Special Checks | 05-50-00 | 1 |

# TIME LIMITS / MAINTENANCE CHECKS - GENERAL

1. Introduction

   A. This chapter provides scheduled and unscheduled maintenance checks and inspections, recommended by the type certificate holder as well as the time limits for service life limited components and parts.

2. General Description

   In the following, a brief description and intended purpose of each section of this chapter is given.

   A. Section 05-00 - Time limits / Maintenance Checks - General. This section provides a general overview of the content and purpose of this chapter.

   B. Section 05-10 - Component Time Limits. This section contains the time limits of all service life limited components and parts and recommended time between overhaul (TBO) for components.

   C. Section 05-20 - Scheduled Maintenance Checks. This section contains information about recommended scheduled maintenance and inspections. The recommended maintenance and inspection program for the systems and components as well as the relevant intervals are embodied in a checklist included in this section.

   D. Section 05-30 - Daily Inspections. In this section pre-flight and post-flight checks are described, that have to be carried out every day the aircraft is in operation.

   E. Section 05-50 - Unscheduled Maintenance Checks. This section specifies checks, which have to be conducted after unusual events and incidences such as hard landings.

# COMPONENT TIME LIMITS

1. General

A. Different components and parts of the aircraft are certified for specific service life. When reaching this time limit, the respective item must be replaced or overhauled.
In order to monitor permissible service life the installation or removal of each item must be recorded in the aircraft logbook.
Where an interval is given in both flight time and calendar time, the limit which is reached first must be applied.

2. Component Time Limits

A. Under certain circumstances the replacement or overhaul of components may be required before the time limits listed below are reached.

B. Replacement or overhaul time limits, recommended by the type certificate holder:

| Chapter | Component / Part | Replacement Time | Overhaul |
|---|---|---|---|
| 24 | Ignition lock | 6000 h | no |
| 24 | Starter relais | 2000 h | no |
| 27 | Elevator control rods incl. rod ends | 6000 h | no |
| 27 | Rudder control cables | 6000 h | no |
| 27 | Control surface plain bearing bushings | 6000 h | no |
| 27 | Trim switch | 1000 h | no |
| 28 | Electrical fuel pump | 3000 h or 10 years | no |
| 32 | Nose landing gear spring package rubber elements | 5 years | no |
| 32 | Main landing gear struts | no | 6000 h |
| 32 | Flexible hoses of the brake system | 10 years | no |
| 55 | Lower rudder hinge bracket | 6000 h | no |
| 57 | Wing attachment bolts | 6000 h | no |

| Chapter | Component / Part | Replacement Time | Overhaul |
|---|---|---|---|
| 71 | Flexible teflon hoses of the oil / fuel system[1)] | 2000 h or 15 years | no |
| 71 | Flexible hoses of the cooling system[1)] | 5 years | no |
| 71 | AQUILA engine mount and attaching bolts | 6000 h | no |
| 71 | Engine shock mounts | with engine overhaul | no |
| 76 | Engine / propeller control Bowden cable wires | 2000 h | no |

C. Vendor Established Component Time Limits

| Chapter | Component / Part | Replacement Time | Overhaul |
|---|---|---|---|
| 25 | ELT battery | Note 1 | no |
| 26 | Fire extinguisher Air Total HAL 1.0 | no | 10 years Note 4 |
| 26 | Fire extinguisher H3R RT A400 | 12 years | no |
| 26 | Fire extinguisher H3R A344T | no | 6 years Note 4 |
| 31 | ASPEN internal battery | 800 h or 3 years | no |
| 34 | KMD 150 MFD/GPS internal battery | 10 years (recommended) | no |
| 34 | WINTER instruments | no | Note 5 |
| 61 | Propeller MTV-21-A/175-05 | no | 2400 h or 6 years Note 2 |
| 61 | Propeller governor Woodward A210786 | no | 6 years, with engine Note 6 |
| 61 | Propeller governor P-410-13 | no | 2400 h or 6 years Note 2 |
| 61 | Propeller governor P-850-12 | no | 2400 h or 6 years Note 2 |

1) Hoses that are not covered by the engine type certificate (TC).

| | | | |
|---|---|---|---|
| 71 | Engine ROTAX 912S | no | 2000 h or 15 years,<br>1500 h or 12 years,<br>1200 h or 10 years<br>Note 3 |
| 71 | ROTAX mechanical fuel pump | 5 years<br>Note 3 | no |
| 71 | ROTAX flexible teflon hoses of the fuel system | with engine overhaul<br>Note 3 | no |
| 71 | ROTAX rubber parts of the engine (V-belt, hoses, carburetor parts) | 5 years<br>Note 3 | no |
| 71 | Spark plugs | 400 h<br>Note 3 | no |

NOTES:

Note 1: Refer to manufacturer instructions for battery replacement time limits.

Note 2: Refer to latest issue of the mt-propeller Service Bulletin No. 1.-( ), and to the mt-Propeller E-124 Operation and Installation Manual.

Note 3: Refer to the latest issues of BRP-Rotax, i.e. Service Bulletins, Service Information and to the ROTAX Aircraft Engines Maintenance Manual for ROTAX Engine Type 912 Series.

Note 4: Refer to manufacturer instruction for overhauling.

Note 5: Though there is no TBO for these instruments, the manufacturer Gebr. Winter GmbH & Co. KG recommends that airspeed indicators and altimeters are subjected to retesting after 5 years.

Note 6: The 6 year calendar time limit applies for units not in continuous service with a minimum of 120 hours per year. Refer to the latest issue of the Woodward Service Bulletin S/B-33580-M.

# SCHEDULED MAINTENANCE CHECKS

1. General

A. The inspection time intervals chart contained in this chapter shows the recommended intervals at which maintenance and maintenance checks should be carried out on the aircraft.

**Annual inspections and 100 hour inspections on the AQUILA AT01 must include all inspection items as required by FAR 43, Appendix D, "Scope and detail of annual/100h inspections". Chapter 4 "Airworthiness Limitations" of this manual defines the inspection intervals for continued airworthiness.**

B. If an aircraft is being operated under unusual environmental conditions, maintenance intervals may be reduced.

2. Inspection Time Intervals Chart

A. The maintenance and checks listed are to be carried out at the specified intervals and documented appropriately.

NOTE: For new aircraft and new engines the first check is carried out after 25 hours and should be of the extent of a 100-hour inspection. For new engines only an engine ground run and the checks listed in the "Engine" section have to be carried out.

NOTE: If more than 30% of operation hours have been flown with leaded fuel (e.g. AVGAS 100LL), an additional 50-hour inspection is necessary (refer to ROTAX Aircraft Engines SI-912-016).

NOTE: Where an interval is given in both flight time and calendar time, the limit which is reached first must be applied. The next interval starts with the flight time and calendar time of the latest performed maintenance check.

NOTE: In order to demonstrate continued airworthiness, engines must be inspected after every 100 hours of operation or 12 months. If the aircraft has less than 100 hours of operation during one year a 100 hour check must be carried out. For the annual inspection a tolerance of ±2 months is given.

B. For intervals between maintenance work, the following tolerances must not be exceeded:

| Interval | Tolerance |
|---|---|
| up to and including 100 h | 10% of interval |
| >100 h up to and including 1000 h | 5% of interval |
| >1000 h | 50 h |
| calendar time limits | 30 days |

These tolerances must not be added up. For example: if the 100-hour inspection was done at 107 h, the next inspection must be done at 200±10 h, not 207±10 h.

If an inspection is carried out earlier than allowed by the specified tolerance, all subsequent inspection intervals are counted from that inspection. For example: If the 100 h inspection was done at 87 h, the next inspection must be done at 187±10 h.

C. Due to recent ROTAX publications the maintenance checks given for the ROTAX engine may not be up to date. Refer to the latest revisions of ROTAX Engine Type 912 Series Maintenance Manual and Service Bulletins.

D. Due to the multiplicity of equipment coming onto the market, no maintenance instructions are given for electronic equipment. For information on a certain component use the documentation provided by the manufacturer of this component.

NOTES:

| | |
|---|---|
| MML* | Maintenance Manual Line for ROTAX Engine Type 912 Series |
| MMH* | Maintenance Manual Heavy for ROTAX Engine Type 912 Series |
| MT* | mt-Propeller E-124 Operation and Installation Manual |
| TTSN | Total Time Since New |
| TTSO | Total Time Since Overhaul |

E. Inspection Time Intervals Chart:

| | | | | | |
|---|---|---|---|---|---|
| Aircraft S/N | | Operating Hours | | Registration Number | |
| Engine S/N | | Operating Hours TTSN / TTSO: | | Date | |
| Propeller S/N | | Operating Hours TTSN / TTSO: | | Type of Inspection | |

| No. | Pre-Inspection | Reference | Interval 100h | other | Initials |
|---|---|---|---|---|---|
| 1. | Check that the following documents are up-to-date and available upon request:<br>- AT01 Maintenance Manual<br>- AT01 Airplane Flight Manual<br>- Aircraft Log Book and required certificates<br>- Engine and Propeller Log Books<br>- Equipment List and Weight and Balance Record<br>- Airworthiness Directives<br>- Service Bulletins and Service Information<br>- Services Time Record | AT01 Maintenance Manual, AT01 Airplane Flight Manual | X | | |
| 2. | Airworthiness Directives - Verify all Airworthiness Directives have been complied with. | | X | | |
| 3. | Service Letters, Service Bulletins, and Service Information - Verify all AQUILA and suppliers Service Letters, Service Bulletins and Service Information have been complied with. | | X | | |
| 4. | Service time records, equipment list and weight and balance records - Check. Update if necessary. | | X | | |
| 5. | Aircraft file and technical documentation - Verify complete and in proper order. | | X | | |
| 6. | Engine and engine compartment - General visual inspection for damage or abnormalities. Clean for leakage check. | MML* 12-20-00 | X | | |
| 7. | Airframe, power plant, propeller - Do a walk around to detect damages, fluid leaks or other abnormalities. | | X | | |
| 8. | Fuselage and empennage - Clean. | | X | | |
| 9. | Aircraft interior - Clean and vacuum. | | X | | |
| 10. | Record all malfunctions and abnormalities. | | X | | |

| No. | Engine Ground Test | Reference | Interval 100h | Interval other | Initials |
|---|---|---|---|---|---|
| 1. | Perform an engine test run as follows.<br>(RPM in this point are specified as propeller RPM)<br><br>**Start engine and warm-up** at 820 RPM for approx. 2 minutes, continue at 1030 RPM until oil temperature reaches 50° C.<br><br>**Rudder pedal brakes and parking brake** - Check for proper operation.<br><br>**Magneto RPM drop** - Set 1700 RPM. Check that RPM drop is less than 120 RPM while operating on one magneto and no more than a 50 RPM drop difference between left and right magnetos.<br><br>RPM drop left magneto :_____RPM<br>RPM drop right magneto:_____RPM<br><br>**Propeller governor** - Set 1700 RPM and monitor manifold pressure. Reduce engine speed by moving the propeller control from START to CRUISE. Repeat three times.<br>RPM should drop by 200±15 RPM and manifold pressure should rise.<br><br>RPM drop: _____RPM / Man. press. rise :_____in. Hg<br><br>**Carburetor heat** - Pull knob at 1700 RPM.<br>Propeller RPM should show a drop of at least 20 RPM.<br><br>RPM drop:_____RPM<br><br>**Engine full power** - Advance throttle/propeller to full forward.<br>Tachometer should read 2240±15 RPM.<br><br>Full power RPM:_____RPM<br><br>**Cool down** engine at 1100 RPM.<br><br>**Engine instruments** - Check engine parameters.<br><br>**Engine idle** - Move throttle control lever to full aft.<br>Tachometer should read 750±50 RPM.<br><br>Idle RPM:_____RPM<br><br>**Shut down engine**, set the ignition switch and master switch to the OFF position. Remove ignition key from aircraft. | MML* 12-20-00<br><br>Airplane Flight Manual<br><br>32-40<br><br>MT* | X | | |

| No. | Engine | Reference | Interval 100h | Interval other | Initials |
|---|---|---|---|---|---|
| 1. | Engine cowling - Remove engine cowling. Check for cracks, overheated areas, deformation, loose or missing fasteners. Check condition of fire protect paint and heat resistance shielding. | | X | | |
| 2. | Engine oil change - Remove oil drain screw from oil tank. Drain old oil and dispose in accordance with environmental regulations. | 12-12<br>MML* 12-20-00 | X | 50h[1)] | |
| 3. | Oil tank - Check oil tank and clean if contaminated. | MML* 12-20-00 | X | 50h[1)] | |
| 4. | Oil filter - Remove old oil filter from engine and install new oil filter. Lubricate mating sealing ring of new oil filter with engine oil. Tighten new oil filter by hand.<br><br>Cut open old oil filter without producing any metal chips and inspect filter mat, filter cover, sealing lip, spring of bypass valve (small) and positioning spring (large) for particles, wear and missing material.<br><br>Findings:_____ | 12-12<br>MML* 12-20-00 | X | 50h[1)] | |
| 5. | Visual inspection of the magnetic plug for accumulation of chips | MML* 12-20-00 | X | | |
| 6. | Oil change - Renew gasket ring of drain screw on oil tank. Tighten drain screw to 25 Nm (221 in.lbs).<br>Refill oil tank with approx. 3 liters of oil. For oil quality, see Operators Manual and SI-912-016.<br><br>Refilled:_____Quantity:_____L<br><br>CAUTION:<br>DO NOT USE AIRCRAFT ENGINE OIL.<br><br>Due to the friction clutch and the high stresses in the reduction gear 4-stroke motor cycle oils are recommended. For suitable lubricants and oil change intervals, see ROTAX Operators Manual and latest appropriate ROTAX publications. | 12-12<br>MML* 12-10-00<br>MML* 12-20-00<br>SI-912-010<br>SB-912-040 | X | 50h[1)] | |
| 7. | Check compression by differential pressure method.<br>Test pressure: 6 bar (appr. 6000 hPa / 87 psi)<br>Pressure drop: max. 25%<br>Cyl. 1 2 3 4<br><br>Pressure drop: _____ _____ _____ _____ | MML* 12-20-00 | X[1)] | 200h | |
| 8. | Cooling air ducts, engine baffling and cylinder cooling fins - Check for obstructions, cracks, wear and general condition. Check for signs of abnormal temperatures. Check crankcase for cracks. | MML* 12-20-00<br>SB-912-029 | X | | |
| 9. | Leakage bore at the base of the water pump - Check for signs of leakage. | MML* 12-20-00 | X | | |

1) If more than 30% of operation hours have been flown with leaded fuel e.g.: AVGAS 100LL

| No. | Engine | Reference | Interval 100h | Interval other | Initials |
|---|---|---|---|---|---|
| 10. | Cooling system - Renew coolant (conventional coolant only). Flush the cooling system. | 12-14<br>MML* 12-20-00 | | 3 years[3)] | |
| 11. | Coolant hoses and lines - Check for damage, leakage, hardening due to heat, porosity, loose connections and secure attachments. Check routing for kinks and narrow bends. | 75-00<br>MML* 12-20-00 | X | | |
| 12. | Coolant expansion tank - Check for damage and abnormalities. Inspect rubber protection plate on tank base for secure fit. Check coolant level, replenish as necessary. Check gasket of tank cap, inspect pressure control valve and return valve. The pressure control valve opens at 1,2 bar (18 psi). Check coolant with densimeter or glycol tester. | 75-00<br>MML* 12-10-00<br>MML* 12-20-00<br>SB-912-043 | X | | |
| 13. | Overflow bottle - Inspect for damage and abnormalities. Verify coolant level, replenish as necessary. Inspect venting bore in cap of overflow bottle for clear passage. Check line from exp. tank to overflow bottle for damage, leakage and clear passage. | 75-00<br>MML* 12-10-00<br>MML* 12-20-00 | X | | |
| 14. | Oil and coolant radiator - Check for obstructions, leaks and security of attachment. If necessary, clean cooling fins and do a pressure leakage test. | 75-00<br>79-20 | X | | |
| 15. | Oil lines - Inspect for damage, leakage, hardening due to heat, porosity, security of connections and attachments.<br>Check routing for kinks or narrow bends.<br>Check fire protection shielding. | MML* 12-20-00 | X | | |
| 16. | Oil tank vent line - Check for proper routing, for obstructions and clear passage | | X | | |
| 17. | Fuel lines - Check for damage, leakage, hardening due to heat, porosity, secure connections and attachments.<br>Check routing for kinks or narrow bends. Check metal fuel lines for cracks and scuffing marks. | MML* 12-20-00 | X | | |
| 18. | Fuel selector / shut-off valve - Check for security of attachment. Check that the valve engages noticeable into the positions LEFT, RIGHT and OFF. | | X | | |
| 19. | Filter element of electrical fuel pump - Inspect and clean. | 28-20 | X | | |
| 20. | Battery - Clean. Check charge. Measure residual capacity [2)]. Capacity (C10) must be at least 19,2 Ah [2)]. If applicable, check acid level and vent case. If necessary, charge/replace battery. | 12-17<br>24-30 | X | | |
| 21. | Battery tray, terminals and cables - Check for security, corrosion and general condition. Grease battery terminals. | 12-22 | X | | |
| 22. | Starter - Check security of attachment and electrical connections. | | X | | |
| 23. | External alternator - Check attachment and V-belt tension. Inspect electrical connections. | MML* 12-20-00 | X | | |

2) N/VFR equipped aircraft only.
3) If SB-AT01-025 or SB-AT01-029 (retrofit of a new cooling system) has been carried out.

| No. | Engine (Cont.) | Reference | Interval 100h | Interval other | Initials |
|---|---|---|---|---|---|
| 24. | Spark plugs - Remove all spark plugs, check for spark plug defects (deposits, excessive wear, melting). Clean spark plugs and check electrode gap. Replace as required. | MML* 12-20-00<br>SI-912-027 | X | | |
| 25. | Spark plug connectors - Check that resistance spark plug connectors fit tightly on the spark plugs.<br>Minimum pull-off force is 30 N (7 lb). | MML* 12-20-00<br>SI-912-027 | | 200h | |
| 26. | Spark plugs - Replace spark plugs | | | 400h<br>200h[1)] | |
| 27. | Wiring harness - Inspect the wiring and its connections for secure fit, damage and signs of wear. | MML* 12-20-00 | X | | |
| 28. | Sensors - Check for tight fit, condition and security of attachment. | | X | | |
| 29. | Exhaust system - Check attachment screws and springs for security and fit. Inspect system for damage and missing parts. Visual inspection of the muffler, exaust pipes and mounting flanges for cracks, corrosion and leakage.<br>Check heat shielding for condition. | | X | | |
| 30. | Cabin heat - Check heat shroud and heat ducts for damage and security of attachment. Check heat control function. | | X | | |
| 31. | Exhaust muffler - Remove heat shroud from muffler and inspect muffler for condition, corrosion and leakage.<br><br>WARNING:<br>FAILURE TO INSPECT MUFFLER FOR LEAKS COULD RESULT IN CARBON MONOXIDE ENTERING THE CABIN, LEADING TO SERIOUS INJURY OR DEATH! | 78-10 | | 200h | |
| 32. | Propeller gear box - Check the friction torque in free rotation.<br><br>Actual friction torque is measured: _____Nm | MML* 12-20-00 | X | | |
| 33. | Propeller gear box - Inspect overload clutch. | MML* 12-20-00<br>SB-912-033 | | 600h[1,4)]<br>1000h | |
| 34. | Propeller gear box - Check the propeller gearbox. Check gear set (pittings). Check wear on tooth of overload clutch. | MML* 12-20-00 | | 1000h | |
| 35. | Carburetors - Check carburetor synchronization. Mechanical and pneumatic synchronization. | MML* 12-20-00 | X | | |
| 36. | Carburetors - Inspect the float chamber assy for contamination and corrosion. Check float weight. | MML* 12-20-00<br>SI-912-021 | | 200h<br>annual | |
| 37. | Carburetors - Check the ventilation of the float chambers. Any trouble with float chamber ventilation impairs engine and carburetor function and must therefore be avoided. Check that the passage of the ventilation lines is free and that no kinks can arise. | | | 200h<br>annual | |

1) If more than 30% of operation hours have been flown with leaded fuel e.g.: AVGAS 100LL
4) Overload clutch without lead drain holes (P/N 996886) only.

| No. | Engine (Cont.) | Reference | Interval 100h | other | Initials |
|---|---|---|---|---|---|
| 38. | Carburetors - Removal/assembly of the two carburetors for carburetor inspection. | MMH* 73-00-00 | | 200h annual | |
| 39. | Carburetors - Check the free movement of the carburetor actuation (throttle lever and starting carburetor).<br>Lubricate carburetor throttle shaft. | MML* 12-20-00<br><br>12-22 | X | | |
| 40. | Carburetor sockets and drip tray - Inspect the carburetor sockets for damage and abnormalities, check for cracks, wear and good condition. Take note of any changes caused by temperature. | MMH* 73-00-00<br>SB-912-030 | | 200h | |
| 41. | Airbox assy - Check for damage, security of attachment and condition. Inspect connected air hoses for condition and leakage. | | X | | |
| 42. | Airbox assy - Check air flap actuation of carburetor heat system. Check that the flaps can be moved through their full arc of travel for hot and filtered ram air. Flap for hot air must be fully closed when carb. heat is off. | | X | | |
| 43. | Throttle control - Check the free movement of the throttle actuation. Check that the Bowden cables allow full travel of the throttle lever from stop to stop. Check Bowden cables for bulging with control lever in the full throttle position.<br>Adjust throttle control if necessary. | 76-00 | X | | |
| 44. | Air filter - Inspect and clean. Renew if necessary. Clean air filter casing. Check the drain hole at the bottom of casing for obstructions or blockage. | MML* 12-20-00 | X | | |
| 45. | Other external engine accessories - Inspect screws and nuts of all other external engine parts and accessories for tight fit. Inspect safety wiring if applicable, replace as necessary. | | X | | |
| 46. | Engine mounts (manufactured by ROTAX and AQUILA) - Check mounts for deformation, cracks, corrosion, security and damage from heat. Check mounting bolts for condition and correct torque value.<br>At shock mounts (4 bolts M10): 25 Nm (221 in.lbs)<br>At firewall (4 bolts M10): 30 Nm (266 in.lbs)<br>Inspect shock mounts for deterioration. | MML* 12-20-00<br>SB-912-028<br>SB-AT01-022 | X | | |
| 47. | Engine test run - Attach cowling and perform an engine test run as described above. After engine test run, re-tighten oil filter by hand and examine engine and engine compartment for signs of leakage. Compare results with first engine test run. Check oil level, replenish as necessary. | 05-20<br>MML* 12-20-00 | X | 50h[1)] | |

1) If more than 30% of operation hours have been flown with leaded fuel e.g.: AVGAS 100LL

| No. | Propeller | Reference | Interval 100h | Interval other | Initials |
|---|---|---|---|---|---|
| 1. | Spinner - Remove from aircraft and check for delamination and cracks. | 61-10 | X | | |
| 2. | Spinner plate - Check for cracks and fit. | | X | | |
| 3. | Blade root and hub area - Examine for oil and grease leaks. | | X | | |
| 4. | Propeller blades - Check blade play (up to 3 mm [1/8 in.] allowed). | | X | | |
| 5. | Propeller blades - Check blade angle play. (max. 2°) | | X | | |
| 6. | Hub - Inspect outside condition of the hub and parts for cracks, corrosion and deterioration. | | X | | |
| 7. | Check nuts for low pitch - Inspect for tightness and safety wire. | | X | | |
| 8. | Propeller assy - Check safetying. | | X | | |
| 9. | Propeller flange stop nuts - Check correct torque value (45 - 47 Nm [398 - 416 in.lbs]). | | X | | |
| 10. | Propeller blades - Visual inspection for damage, repair if necessary. Attach spinner. | MT* 6.2) - 6.10) | X | | |
| 11. | Propeller governor - Visually inspect for signs of oil leakage. Check bolts and nuts are tightened properly and safety wired. Check governor actuation for free movement and bulging. | 61-20 | X | | |

| No. | Fuselage / Cabin | Reference | Interval 100h | other | Initials |
|---|---|---|---|---|---|
| 1. | Prepare aircraft for visual checks:<br>Remove cabin carpets and floorboards;<br>Remove glare shield;<br>Remove baggage compartment floorboard;<br>Remove access panel of the baggage compartment bulkhead;<br>Remove access panel 210AB. | 06-30 | X | | |
| 2. | Fuselage shell / structure - Visual inspection for paint coat damage, dents, cracks, holes, distortion and other evidence of failure. All unpainted parts for delamination (white spots). Check frames for delamination, cracks and disbonding. | SB-AT01-038 | X | | |
| 3. | Lower fin - Inspect fin and lower rudder for signs of breakage. Check skid plate for wear. | | X | | |
| 4. | Canopy - Examine the acrylic glass for cracking, crazing and general condition. Inspect tubular canopy hinge frame and brackets for cracks, distortion, corrosion, wear, and security of attachment. Check the gas spring strut for sufficient power and evidence of leakage. | | X | | |
| 5. | Canopy locking - Check the canopy locking mechanism operates correctly. Check wear of parts. Check existence of the locking pin. The pin has to protrude the cover by approx. 2 mm. Cases of lacking locking pins have to be reported to the type certificate holder (contact information: see cover sheet). Check function of the locking pin. The canopy locking mechanism must not be too smooth-running. In the locked position of the latch, a smooth running release of the latch due to in-flight vibrations must not be possible.<br>If necessary, readjust locking pin. | 52-10 | X | | |
| 6. | Lubricate canopy lock assembly. | 12-22 | | annual | |
| 7. | Baggage door - Check door seal, door latching mechanism, and door hinge for defects and condition. Lubricate if needed. Inspect door structure for cracks or other damage. | 12-22 | X | | |
| 8. | ELT - Perform ELT inspection. Check ELT mount and Velcro strap for security of attachment. Replace strap if necessary. | 25-62 | | annual | |
| 9. | Seat belts/harnesses for pilot / co-pilot - Check components for completeness of the label, deformation, cracks, fractures, functioning of moveable parts, corrosion, surface finish condition and security of attachment.<br>Check textile components for damaged stitching, injurious marks, broken fabric threads, chafe marks and fusing.<br>Perform functional check of buckle and inertia reel. | | X | | |
| 10. | Seats - Check security of attachment of the seat assy to aircraft structure. Check operation of seat adjustment mechanism and seat stops. Inspect gas spring struts for oil leakage or other damage. | | X | | |
| 11. | Seats - Check ease of movement - if required remove seats, clean and lubricate seat rails. | 25-10 | | annual | |

| No. | Fuselage / Cabin (Cont.) | Reference | Interval 100h | Interval other | Initials |
|---|---|---|---|---|---|
| 12. | Center Console - Visually examine the parts of the engine controls, lines and cables, located in the center console. | | | annual | |
| 13. | Engine and propeller controls - Check for proper function, security of attachment and for evidence of wear. Check Bowden cables for bulging with control levers in the full throttle / high RPM position. Check Bowden cable clamp screws on control levers are freely rotatable. | | X | | |
| 14. | Parking brake valve - Check for evidence of leakage especially at the brake line connections. Check control assy for damage. | | X | | |
| 15. | Rudder pedal bearing - Lubricate. | 12-22 | | annual | |
| 16. | Brake master cylinders and brake lines in the cabin area - Check for security, condition and signs of leakage. | | X | | |
| 17. | Fuel lines - Check for leakage and security. | | X | | |
| 18. | Main landing gear - Inspect fuselage structure at such points and areas where the main landing gear is attached. Check for stress marks, distortion, disbonding, and delamination. Inspect main landing gear strut brackets for distortion, cracks, corrosion, and security of attachment. Check wear and condition of the polyamide inserts. Check bolts for correct torque. | | X | | |
| 19. | Flap actuator - Check for wear and damage, for secure mechanical connections and loose or missing lock devices. Check electrical wiring for wear, damage, and proper routing. Inspect electrical connections and switches for security, corrosion and poor condition. Check function of the limit switches and position indicator. | | X | | |
| 20. | Elevator trim system - Check the actuator and the springs for security, wear and damage. Check safetying. Check electrical wiring for wear, insulation damage, and proper routing. Inspect electrical connections and switches for security, corrosion and poor condition. Perform system test and check the correct function of the position indicator. | | X | | |
| 21. | Aileron and elevator control - Check the control sticks, the brackets and the control rods for distortion, cracks, chafing, corrosion and security. Examine all bearings for condition and secure fit. Check safetying. Check travel of control surfaces if the control stick is in the full forward /neutral/ aft, and full left /neutral/ right positions. Verify no binding or jumpy movement of the control sticks through their full range of travel. | | X | | |

| No. | Fuselage / Cabin (Cont.) | Reference | Interval 100h | other | Initials |
|---|---|---|---|---|---|
| 22. | Rudder control - Check rudder control weldment and rudder bellcrank for cracks, distortion, chafing and security. Examine rudder control support brackets, rudder pedal pivot brackets and connection of the rudder controls with the nose gear steering tubes for security, condition and correct splintering. Check centering of springs and cables. Inspect control cables, control cable guides, cable connections, turnbuckles and hardware for correct installation, corrosion, wear, safetying and proper operation. | | X | | |
| 23. | Rudder / aileron control interconnection - Check condition and correct function. | | X | | |
| 24. | Brake reservoir - Check for leakage and system for trapped air. Inspect the vent valve in the filler cap of the brake reservoir for obstruction and blockage. Make sure the hydraulic brake fluid level is correct and replenish, if necessary. Only use hydraulic brake fluid of the required grade. | | X | | |
| 25. | Hydraulic brake fluid - Renew. | 32-40 | | 3000h<br>5 years | |
| 26. | Wing main bolts - Inspect for proper fit, condition and correct safetying. | 57-10 | X | | |
| 27. | Wing main bolts - Remove for visual inspection and lubrication.<br><br>Lube type used: _____ | 57-10<br>12-22 | | 500h 5)<br>5years 5)<br>or<br>annual 5) | |
| 28. | Exterior / interior placards and markings - Check presence, legibility, and security. | 11-20<br>11-30 | X | | |
| 29. | Fire extinguisher - Check for physical damage, corrosion, leakage or clogged nozzle. Weigh unit to determine fullness. Check for obstructions to access or visibility, safety seal is not broken or missing, HMIS label in place, instructions are legible. | | | annual | |
| 30. | Elevator control cover - Check that edge protection profile is installed in the baggage compartment. | SB-AT01-039 | X | | |

5) Interval depends on lube type. Refer to 12-22.

| No. | Wings, Ailerons, Flaps | Reference | Interval 100h | Interval other | Initials |
|---|---|---|---|---|---|
| 1. | Wings with winglets, ailerons, and flaps - Visual inspection for paint coat damage, dents, cracks, holes, distortion and other evidence of failure. Examine all unpainted parts for delamination (white spots). | | X | | |
| 2. | Wing spars in the fuselage belly - Remove spar covering and perform visual inspection of the spar web, the bonding between the spar web and the carbon fiber spar cap strip, as well as the attachment of the root ribs to the spars. Check security and function of control system brackets attached to the spars. | | | annual | |
| 3. | Drain and vent holes - Check for blockage and suspect appearance of any liquid. | | X | | |
| 4. | Ailerons - Check aileron hinges, bearings, and hinge brackets for security and excessive play. Check hinge bushings and replace if necessary. Check bolts and nuts for proper safetying. Examine aileron pushrod for correct installation with stop nuts. Check actuation assembly for suspect binding, excessive play. | | X | | |
| 5. | Aileron hinges - Check play. Maximum play approx.:<br>- Axial ± 1,00 mm (± 0.04 in.)<br>- Radial ± 0,30 mm (± 0.01 in.) | | X | | |
| 6. | Aileron control system - Measure the play in the aileron control system with the control surface locked.<br>Apply a lateral force of 30 N (6.7 lb) to the control stick - the maximum play allowed on the top of the stick is 10 mm (0.4 in.) for both sides. The play should be measured for both control sticks. If excessive play is detected, investigate cause. | | X | | |
| 7. | Flaps - Check hinge brackets for damaged paint, cracks and delamination. Check bearings for correct fit and excessive play. Check hinge bushings and replace if necessary. Check correct safetying of all hinge bolts and castle nuts with cotter pins. | | X | | |
| 8. | Flap hinges - Check play. Maximum play approx.:<br>- Axial ± 0,30 mm (± 0.01 in.)<br>- Radial ± 0,30 mm (± 0.01 in.)<br>Measure the play in the flap control system at the flap trailing edge, at the inboard flap end. Max. play allowed with flaps in take-off and landing positions: ± 5 mm (0.2 in.). No play with flaps retracted. | | X | | |
| 9. | Flaps and ailerons - Check that the gap between fuselage and flaps, between flaps and ailerons, and at the outboard end of the ailerons is at least 2 mm ( 0.08 in.). | | X | | |
| 10. | Stall warning system - Check for condition and proper operation. | | X | | |
| 11. | For serial numbers from AT01-100 to AT01-126:<br>Bonding between wing spar and upper shell - Check condition. | 57-10<br>SB-AT01-002 | | annual | |

| No. | Wings, Ailerons, Flaps (Cont.) | Reference | Interval 100h | other | Initials |
|---|---|---|---|---|---|
| 12. | Navigation / strobe lights - Check operation, condition of glass, and security of attachments. | 33-40 | X | | |
| 13. | Inner fuel tank ribs - Check connection of fuel and vent lines to the fuel tank and the flange gasket of the fuel level sensors for signs of leakage. | 28-10<br>28-20<br>28-40 | | annual | |
| 14. | Fuel vent lines - Check for blockage. | | X | | |
| 15. | Fuel tank drain valves - Check for correct function and leakage. | | X | | |
| 16. | Fuel tank outlet strainer - Check for damage. Clean if necessary. | | | 1000h | |
| 17. | Fuel filler caps - Check for proper function and leakage. | | X | | |
| 18. | Tank inlet and upper wing shell in the fuel tank area - Check sealing of the bore hole in the tank inlet. Check wing skin for bubble formation or bulging. | SB-AT01-027 | | annual | |
| 19. | Tie-down points - Check thread and structure around the tie-down attach points for any damage. | 10-20 | X | | |

| No. | Empennage, Elevator, Rudder | Reference | Interval 100h | Interval other | Initials |
|---|---|---|---|---|---|
| 1. | Empennage - Inspect complete surface of the vertical and horizontal stabilizers, the elevator and the rudder for dents, cracks, holes and delamination. | | X | | |
| 2. | Rudder hinge, elevator hinge and bellcranks - Check brackets and bellcranks for security of attachment and corrosion. Examine bearings for binding and excessive play. Check hinge bushings and replace if necessary. Check correct safetying of the lower rudder pivot pin with castellated nut and cotter pin. | | X | | |
| 3. | Hinge play and control surface positioning - Verify clearance between horizontal stabilizer and elevator horns and clearance between vertical stabilizer and rudder horn is at least 1 mm (0.04 in.). Check elevator hinge and rudder hinge play. Maximum play approx.:<br>- Axial ± 0,30 mm (± 0.01 in.)<br>- Radial ± 0,30 mm (± 0.01 in.) | | | annual | |
| 4. | Elevator control system - Measure the play in the elevator control system with the control surface locked. Apply a force of 50 N (11.2 lb) forwards and then backwards to the control stick - the maximum play allowed on the top of the stick is 10 mm (0.4 in.) for both sides. | | | annual | |
| 5. | Rudder - Remove rudder if there is noticeable play. Examine the elevator actuation assembly inside the vertical stabilizer. Check for any damage, for correct installation and function and for security and wear.<br>Inspect rudder hinge brackets, rudder yoke and control cable thimble-eyes for security, conditions and wear.<br>Lubricate control cable thimble-eyes as required. | 55-40 | | annual | |
| 6. | Rudder rigging - Set rudder pedals in neutral position. Verify the rudder and the nose landing gear are also in neutral position. Set rudder pedals to fully left and then to full right. The rudder must hit the rudder travel stops and the distance from rudder pedal to firewall must be sufficient to apply the pedal brake. Adjust position of the rudder pedals by varying the length of nose wheel steering tubes. Adjust rudder neutral position and control cable tension by means of the turnbuckles in the cabin area. | 27-20 | X | | |

| No. | Nose and Main Landing Gear | Reference | Interval 100h | other | Initials |
|---|---|---|---|---|---|
| 1. | Wheel fairings - Check condition and correct fit. Remove and clean. Check for paint coat damage, cracks, dents and delamination. | | X | | |
| 2. | Fairing mounts - Inspect for cracks, distortion or other damage. | | X | | |
| 3. | Nose gear strut mount and wheel fork - Check for deformation, cracks and corrosion. Check nose gear strut journal bearing for proper operation, play and correct safetying. | | X | | |
| 4. | Nose gear strut and elastomer package - Check strut for deformation, stress marks, and cracks. Inspect correct installation of the nose wheel fork. Inspect elastomer package for wear, deterioration, cracks, correct fit and security. Check journal bearings of the elastomer package for play and condition. | | X | | |
| 5. | Nose wheel steering - Inspect nose wheel steering tubes for condition, excessive play and correct safetying. Check return springs at nose gear strut for security and verify they are tension-free, when the nose wheel is in neutral position. | | X | | |
| 6. | Main landing gear - Check main gear struts for deformation, cracks, damage to the paint coat, and corrosion. Inspect wheel axles for security of attachment to struts and for any damage. | | X | | |
| 7. | Wheels and rims - Clean. Check tires for wear, cuts, foreign matter and deterioration. Inspect rims for security, deformation, cracks and other damage. Examine wheel bearings for excessive play, corrosion and irregular operation. Check tire pressure and proper location of the red slide marks. | | X | | |
| 8. | Wheel bearings - Clean and lubricate. | 12-22 | | 500h annual | |
| 9. | Wheel brakes - Clean. Apply brakes, examine system for leaks. Inspect brake fluid carrying lines at the main landing gear for condition, leakage and security of attachment. Inspect brake discs for cracks, corrosion and wear. Replace brake discs if worn below 4.3mm (0.17 in.). Inspect brake pads for condition and wear. Replace linings when worn to 2.6mm (0.10 in.). Check freedom of movement of the pistons and pressure plates. | 32-40 | X | | |
| 10. | Wheel axles - Clean. Visually inspect for cracks, nicks, corrosion or other damage. | | | every wheel removal | |

| No. | Electrical System / Avionics | Reference | Interval 100h | Interval other | Initials |
|---|---|---|---|---|---|
| 1. | Electrical wiring system - Check the complete electrical wiring system for security, damage, wear and secure fit. Check all cable connections for tight fit, good contact, corrosion and condition. | | X | annual | |
| 2. | Tank inlet bonding wires - Check bonding between electric ground (exhaust port) and tank inlet (max. 1Ω). | | | annual | |
| 3. | Tank inlet bonding wires - Check bonding wires at the airframe ground tube for yellow discoloration. | SB-AT01-027 | | annual | |
| 4. | Instruments - Check instrument panel mounting brackets for security and condition. Examine instruments for security of attachment. Check electrical cables, hoses and lines for correct installation, condition and proper routing. | | | annual | |
| 5. | Pitot / static system - Check pitot tube for security of attachment, condition and obstructions. Check pitot and static pressure lines for correct installation, condition, water and proper routing. Check water traps for water.[6)] | 34-11 | X | | |
| 6. | Pitot / static system - Perform pitot / static system leak test. | 34-11 | | 2 years | |
| 7. | Pitot heating system - Carefully check pitot tube for heating up with pitot heating switched ON.<br><br>WARNING:<br>RISK OF SKIN BURNS! DO NOT TOUCH<br>PITOT TUBE WHEN HEATING IS SWITCHED ON! | | X[6)] | | |
| 8. | Integrated flight system - Check all components and wiring for damage, corrosion, proper operation and security of attachment. | 34-25 | | annual[6)] | |
| 9. | Garmin G500 system - Check bonding. | 34-25 | | 2000h[6)]<br>10 years[6)] | |
| 10. | Aspen EFD1000 system - Check bonding. | 34-25 | | annual[6)] | |
| 11. | Aspen EFD1000 system - Perform capacity check of the internal back-up battery. | 34-25 | | annual[6,7)] | |

6) if installed
7) Interval is reduced to 6 months after 3 years from date of battery installation.

| No. | Return to Service | Reference | Interval 100h | other | Initials |
|---|---|---|---|---|---|
| 1. | Install wheel fairings.<br>Install seats (if removed).<br>Install cabin floor boards.<br>Install baggage compartment floorboard.<br>Install access panel of the baggage compartment bulkhead.<br>Install access panel 210AB. | 06-30 | X | | |
| 2. | Flight controls - Check for full range of travel and excessive friction. | | X | | |
| 3. | Flaps - Operate through full extension and retraction for steady and complete deployment. Check correct limit switches operation at CRUISE, T/O and LDG flap positions. Verify the corresponding flap switch position and the corresponding flap position indicator reading. | | X | | |
| 4. | Elevator trim - Check for full range of travel and excessive friction. Inspect proper operation of the trim control switch, limit switches, and the trim position indicator. Verify that elevator control forces decrease or increase when operating elevator trim. Measure control force to move stick rearward with full nose-down trim (40 ±5 N). | 27-31 | X | | |
| 5. | Engine and propeller controls - Check full range of motion without any obstruction or excessive friction to travel. Check throttle and propeller control levers friction lock. | | X | | |
| 6. | Foreign items - Remove any foreign items from the aircraft. | | X | | |

The aircraft is airworthy and meets the condition specified in the aircraft data sheet. All maintenance required by Service Information and Airworthiness Directives and all prescribed scheduled maintenance checks have been carried out.

Service Station: Next inspection when _____ hours of operation have been reached.

Place, Date

Name, Signature of Mechanic Name, Signature of Inspector Stamp

3. 6000-Hour Inspection

A. The airframe of the type AQUILA AT01 is limited to 6.000 hours of flight time (refer to 04-00). An inspection program to reach an extension of replacement time can be obtained from the type certificate holder on request.
For all S/N`s having performed the 6000-hour inspection and possible maintenance actions resulting thereof no further life time limit beyond 6000 operating hours will be established and the composite structure is then considered to have "Safe Life".

B. All inspection items listed in the following table ”6000-Hour Inspection Checklist” must be performed within **every 6000 hours of flight time**. The inspection **must be performed in conjunction with a 100-hour inspection including all annual inspection items** listed for the airframe (refer to “Inspection Time Intervals Chart” above).
All items performed, all findings discovered and their follow up corrections have to be recorded in acc. with an approved quality procedures manual.

NOTE: The first 6000-hour inspection is replaced by an inspection program to reach an extension of life time (refer to 04-00). It can be obtained from the type certificate holder on request.

C. The inspection table shows three different types of inspections listed in the column “Method/Inspection”:

| | |
|---|---|
| V | Visual inspection |
| T | Tap test |
| F | Functional / fit check |

Refer to 51-10 for a description of visual inspection and tap test methods.

D. Prior to inspection all aircraft log-books have to be checked to establish the aircraft data set and the repair history of the aircraft.

Before starting the 6000-hour inspection the following actions are required:
(1) Fix the fuselage on jacks (refer to 07-10).
(2) Remove wing (refer to 57-00).
(3) Remove rudder (refer to 55-40).
(4) Remove elevator (refer to 55-20).
(5) Remove ailerons (refer to 57-50).
(6) Remove flaps (refer to 57-50).
(7) Remove cowling (refer to 71-10).

E. 6000-Hour Inspection Checklist

| | | | | | |
|---|---|---|---|---|---|
| Aircraft S/N | | Operating Hours TTSN | | Registration Number | |
| Engine S/N | | Operating Hours TTSN / TTSO | | Date | |
| Propeller S/N | | Operating Hours TTSN / TTSO | | Date | |

| No. | Inspection Items Left Wing | Inspection Method | Finding / Condition | Initials |
|---|---|---|---|---|
| **Root Ribs (in front of and behind wing spar)** | | | | |
| 1. | Bonding area of ribs to the wing shell - delamination, cracks. | V, T | | |
| 2. | Condition of rib laminate, delamination, cracks. | V, T | | |
| 3. | Bonding area at the main wing spar web. | V | | |
| 4. | Wing attachment bolt bushing - bonding in the rib. | V | | |
| 5. | Condition of bushing, wear of bearing area, corrosion. | V | | |
| **Inner Flap Hinge Support Rib** | | | | |
| 6. | Bonding area of rib to the wing shell - delamination, cracks. | V, T | | |
| 7. | Condition of rib laminate, delamination, cracks. | V, T | | |
| 8. | Bonding area at the main wing spar web. | V | | |
| 9. | Areas around bushing - delamination, cracks. | V | | |
| 10. | Condition of ball bearing, wear, corrosion. | V | | |
| **Wing Main Spar** | | | | |
| 11. | Spar cap between root ribs - bonding to shear web, cracks. | V | | |
| 12. | Shear web between root ribs - condition, cracks, delamination. | V | | |
| 13. | Spar cap - inspection through openings in root rib and inspection opening in lower wing shell. Bonding to the wing shell (cracks), condition of the main shear web (delamination). | V | | |
| **Upper and Lower Wing Shell** | | | | |
| 14. | Wing shell - delamination, cracks, scratches in shell surfaces, chipping of paint, UV damage. | V, T | | |
| 15. | Wing shell - core damage and dents in sandwich, disbond of shell laminate from core material. | V, T | | |

| No. | Inspection Items<br>Left Wing (Cont.) | Inspection Method | Finding / Condition | Initials |
|---|---|---|---|---|
| 16. | Areas around inspection openings - delamination, cracks. | V | | |
| 17. | Wing leading edge bonding area - disbonds, cracks. | V, T | | |
| 18. | Area around pitot-static tube opening - delamination, cracks. | V, T | | |
| 19. | Area around tie-down fixation point - delamination, cracks. | V, T | | |
| 20. | Area around NAV-light opening - delamination, cracks. | V | | |
| 21. | Area around winglet root upper wing shell - cracks. | V, T | | |
| 22. | Area around ring insert of the tank filler - cracks, disbonding. | V, T | | |
| **Trailing Edge Shear Web** | | | | |
| 23. | Wing trailing edge, flap area - bonding lower to upper shell, disbond, cracks. | V, T | | |
| 24. | Wing trailing edge, flap area - laminate condition, cracks. | V | | |
| 25. | Wing trailing edge, aileron area - bonding area shear web to wing shell, disbonds, cracks. | V, T | | |
| 26. | Wing trailing edge, aileron area - laminate condition, cracks. | V | | |
| 27. | Bonding left an right of hinge levers for flap and aileron. | V, T | | |
| 28. | Aileron hinge levers - delamination at bolt area, bolt corrosion. | V | | |
| 29. | Flap hinge levers - delamination at bolt area, bolt corrosion. | V | | |
| **Tank Rib** | | | | |
| 30. | Bonding area of rib to the wing shell - delamination, cracks. | V, T | | |
| 31. | Condition of rib laminate, delamination, cracks. | V, T | | |
| 32. | Bonding area at the main wing spar web. | V | | |

| No. | Inspection Items<br>Right Wing | Inspection Method | Finding / Condition | Initials |
|---|---|---|---|---|
| **Root Ribs (in front of and behind wing spar)** | | | | |
| 1. | Bonding area of ribs to the wing shell - delamination, cracks. | V, T | | |
| 2. | Condition of rib laminate, delamination, cracks. | V, T | | |
| 3. | Bonding area at the main wing spar web. | V | | |
| 4. | Wing attachment bolt bushing - bonding in the rib. | V | | |
| 5. | Condition of bushing, wear of bearing area, corrosion. | V | | |

| No. | Inspection Items Right Wing (Cont.) | Inspection Method | Finding / Condition | Initials |
|---|---|---|---|---|
| **Inner Flap Hinge Support Rib** | | | | |
| 6. | Bonding area of rib to the wing shell - delamination, cracks. | V, T | | |
| 7. | Condition of rib laminate, delamination, cracks. | V, T | | |
| 8. | Bonding area at the main wing spar web. | V | | |
| 9. | Areas around bushing - delamination, cracks. | V | | |
| 10. | Condition of ball bearing, wear, corrosion. | V | | |
| **Wing Main Spar** | | | | |
| 11. | Spar cap between root ribs - bonding to shear web, cracks. | V | | |
| 12. | Shear web between root ribs - condition, cracks, delamination. | V | | |
| 13. | Spar cap - inspection through openings in root rib and inspection opening in lower wing shell. Bonding to the wing shell (cracks), condition of the main shear web (delamination). | V | | |
| **Upper and Lower Wing Shell** | | | | |
| 14. | Wing shell - delamination, cracks, scratches in shell surfaces, chipping of paint, UV damage. | V, T | | |
| 15. | Wing shell - core damage and dents in sandwich, disbond of shell laminate from core material. | V, T | | |
| 16. | Areas around inspection openings - delamination, cracks. | V | | |
| 17. | Wing leading edge bonding area - disbonds, cracks. | V, T | | |
| 18. | Area around tie-down fixation point - delamination, cracks. | V, T | | |
| 19. | Area around NAV-light opening - delamination, cracks. | V | | |
| 20. | Area around winglet root upper wing shell - cracks. | V, T | | |
| 21. | Area around ring insert of the tank filler - cracks, disbonding. | V, T | | |
| **Trailing Edge Shear Web** | | | | |
| 22. | Wing trailing edge, flap area - bonding lower to upper shell, disbond, cracks. | V, T | | |
| 23. | Wing trailing edge, flap area - laminate condition, cracks. | V | | |
| 24. | Wing trailing edge, aileron area - bonding area shear web to wing shell, disbonds, cracks. | V, T | | |
| 25. | Wing trailing edge, aileron area - laminate condition, cracks. | V | | |
| 26. | Bonding left an right of hinge levers for flap and aileron. | V, T | | |
| 27. | Aileron hinge levers - delamination at bolt area, bolt corrosion. | V | | |

| No. | Inspection Items<br>Right Wing (Cont.) | Inspection Method | Finding / Condition | Initials |
|---|---|---|---|---|
| 28. | Flap hinge levers - delamination at bolt area, bolt corrosion. | V | | |
| **Tank Rib** | | | | |
| 29. | Bonding area of rib to the wing shell - delamination, cracks. | V, T | | |
| 30. | Condition of rib laminate - delamination, cracks. | V, T | | |
| 31. | Bonding area at the main wing spar web. | V | | |

| No. | Inspection Items<br>Control Surfaces | Inspection Method | Finding / Condition | Initials |
|---|---|---|---|---|
| **Ailerons** | | | | |
| 1. | Aileron surfaces - Check for delamination of shells, scratches. | V, T | | |
| 2. | Paint surfaces - Check for condition, scratches, UV damage, chipping of paint. | V | | |
| 3. | Damage of core, dents to core, disbond between core and skin. | V, T | | |
| 4. | Aileron trailing and leading edges - bonding delamination. | V, T | | |
| 5. | Inner and outer aileron ribs - bonding delamination with skin. | V, T | | |
| 6. | Check condition of drain holes in inner and outer ribs. | V | | |
| 7. | Areas around hinges and aileron control horn fasteners - delamination from skin, cracks. | V | | |
| 8. | Condition of control horn bearing, corrosion, play. | V | | |
| 9. | Condition of hinges (bushings), corrosion, play. | V | | |
| 10. | Inspect for previously performed repairs and repaintings. If so, check aileron mass and static moment to be within specified limits (refer to 57-50). | V | | |
| **Flaps** | | | | |
| 11. | Flap surfaces - Check for delamination of shells, scratches. | V, T | | |
| 12. | Paint surfaces - Check for condition, scratches, UV damage, chipping of paint. | V | | |
| 13. | Damage of core, dents to core, disbond between core and skin. | V, T | | |
| 14. | Flap trailing and leading edges - bonding delamination. | V, T | | |
| 15. | Inner and outer flap ribs - bonding delamination with skin. | V, T | | |
| 16. | Check condition of drain holes in inner and outer ribs. | V | | |

| No. | Inspection Items<br>Control Surfaces (Cont.) | Inspection Method | Finding / Condition | Initials |
|---|---|---|---|---|
| 17. | Areas around hinge fasteners - delamination from skin, cracks. | V | | |
| 18. | Condition of control horn bearing, corrosion, play. | V | | |
| 19. | Condition of hinges (bushings), corrosion, play. | V | | |
| 20. | Inspect for previously performed repairs and repaintings. If so, check flap mass and static moment to be within specified limits (refer to 57-50). | V | | |
| **Rudder** | | | | |
| 21. | Rudder surfaces - Check for delamination of shells, scratches. | V, T | | |
| 22. | Paint surfaces - Check for condition, scratches, UV damage, chipping of paint. | V | | |
| 23. | Damage of core, dents to core, disbond between core and skin. | V, T | | |
| 24. | Rudder trailing and leading edges - bonding delamination. | V, T | | |
| 25. | Lower rudder hinge rib - bonding delamination with skin. | V, T | | |
| 26. | Check condition of drain hole in lower hinge rib. | V | | |
| 27. | Area around upper hinge - delamination from skin, cracks. | V | | |
| 28. | Mass balance horn - Check for cracks and delamination. | V, T | | |
| 29. | Condition of hinge (bushing), corrosion, play. | V | | |
| 30. | Inspect for previously performed repairs and repaintings. If so, check rudder mass and static moment to be within specified limits (refer to 55-40). | V | | |
| 31. | Bolts at lower hinge - Check for condition, cracks, corrosion, thread. | V | | |
| **Elevator** | | | | |
| 32. | Elevator surfaces - Check for delamination of shells, scratches. | V, T | | |
| 33. | Paint surfaces - Check for condition, scratches, UV damage, chipping of paint. | V | | |
| 34. | Damage of core, dents in core, disbond between core and skin. | V, T | | |
| 35. | Elevator trailing and leading edges - bonding delamination. | V, T | | |
| 36. | Inner elevator ribs - bonding delamination with skin. | V, T | | |
| 37. | Check condition of drain holes in inner ribs. | V | | |
| 38. | Areas around hinges - delamination from skin, cracks. | V | | |
| 39. | Mass balance horn - Check for cracks and delamination. | V, T | | |

| No. | Inspection Items<br>Control Surfaces (Cont.) | Inspection Method | Finding / Condition | Initials |
|---|---|---|---|---|
| 40. | Condition of hinges (bushings), corrosion, play. | V | | |
| 41. | Inspect for previously performed repairs and repaintings. If so, check elevator mass and static moment to be within specified limits (refer to 55-20). | V | | |
| 42. | Bolts at inner hinge - Check for condition, cracks, corrosion, thread. | V | | |

| No. | Inspection Items<br>Horizontal Stabilizer | Inspection Method | Finding / Condition | Initials |
|---|---|---|---|---|
| 1. | Stabilizer surfaces - Check for delamination of shells, scratches. | V, T | | |
| 2. | Paint surfaces - Check for condition, scratches, UV damage, chipping of paint. | V | | |
| 3. | Damage of core, dents in core, disbond between core and skin. | V, T | | |
| 4. | Stabilizer leading edges - Check for bonding delamination. | V, T | | |
| 5. | Trailing edge spar - Check for cracks and bonding delamination with skin. | V, T | | |
| 6. | Areas around hinge supports in trailing edge spar - Check for cracks and delamination. | V | | |
| 7. | Condition of hinges (bushings), corrosion, play. | V | | |

| No. | Inspection Items<br>Fuselage | Inspection Method | Finding / Condition | Initials |
|---|---|---|---|---|
| **Fuselage Skin Structure and Vertical Stabilizer Skin** | | | | |
| 1. | Skin surfaces - Check for delamination of shells, scratches. | V, T | | |
| 2. | Paint surfaces - Check for condition, scratches, UV damage, chipping of paint. | V | | |
| 3. | Damage of core, dents in core, disbond between core and skin. | V, T | | |
| 4. | Areas near bonding seam at centerline on upper and lower fuselage surfaces - Inspect for cracks in paint. | V, T | | |
| 5. | Check condition of drain holes in lower fuselage. | V | | |
| 6. | Inspect for previously performed repairs and repaintings. | V | | |
| 7. | Areas near bonding seam at connection between horizontal and vertical stabilizer on upper and lower horizontal surfaces - Inspect for cracks in paint. | V | | |

| No. | Inspection Items Fuselage (Cont.) | Inspection Method | Finding / Condition | Initials |
|---|---|---|---|---|
| **Fuselage / Wing Interconnection** | | | | |
| 8. | Root ribs and intersection to fuselage - Check for cracks in paint and structure. | V | | |
| 9. | Area around wing attachment bolt bushings - Check for cracks and disbonding. | V | | |
| 10. | Wing attachment bolt bushings - Check for wear, scratches, corrosion and tightness of fit with the bolt. | V | | |
| 11. | Seat bulkhead and forward landing gear bulkhead in spar bridge - Check condition of laminate and bonding areas with the fuselage shell. | V, T | | |
| 12. | Forward landing gear bulkhead - Check laminate around fasteners of landing gear supports for cracks and delamination. | V, T | | |
| **Bulkheads, Ribs and Hinges in Vertical Stabilizer** | | | | |
| 13. | Upper and lower shear web in vertical stabilizer - Check for delamination and cracks. | V | | |
| 14. | Upper and lower shear web in vertical stabilizer - Check bonding to the stabilizer shell. | V, T | | |
| 15. | Upper hinge plate - check for delamination and cracks. | V | | |
| 16. | Bushing in upper hinge plate - wear, corrosion, fit/play. | V | | |
| 17. | Lower shear web around fasteners for lower hinge bracket - Check laminate. | V | | |
| 18. | Bushing in lower hinge bracket - wear, corrosion, fit/play. | V | | |
| 19. | Lower end of the stabilizer (bumper) - delamination, cracks. | V | | |
| 20. | Bumper plate at lower end of the stabilizer - Check fixation and condition. | V | | |
| **Firewall** | | | | |
| 21. | Check firewall bulkhead (from cockpit side) for cracks in the laminate (around cut outs). | V | | |
| 22. | Firewall bulkhead - Check bonding to the fuselage skin. | V, T | | |
| 23. | Areas around engine brackets - delamination, cracks. | V, T | | |
| 24. | Firewall metal shield - condition, wear, corrosion. | V | | |
| 25. | Fire resistant firewall sealer around the fire shield - condition, corrosion. | V | | |
| 26. | Areas around Camloc fasteners at fuselage cowling support - Check laminate for cracks and delamination. | V | | |

| No. | Inspection Items<br>Fuselage (Cont.) | Inspection Method | Finding / Condition | Initials |
|---|---|---|---|---|
| 27. | Area around pedal control brackets - delamination, cracks. | V | | |
| **Cockpit Area and Baggage Compartment** | | | | |
| 28. | Front cockpit floor - Check for delamination and cracks. Check bonding area to the fuselage structure for disbonding. | V, T | | |
| 29. | Front shear bulkhead - Check for delamination and cracks. Check bonding area to the fuselage structure for disbonding. | V, T | | |
| 30. | Front seat bulkhead - Check for delamination and cracks. Check bonding area to the fuselage structure for disbonding. | V, T | | |
| 31. | Seat elements and attachments - delamination, cracks. | V, T | | |
| 32. | Rear seat bulkhead - Check for delamination and cracks. Check bonding area to the fuselage structure for disbonding. | V, T | | |
| 33. | Front landing gear bulkhead - Check for delamination and cracks. Check bonding area to the fuselage structure for disbonding. | V, T | | |
| 34. | Rear landing gear bulkhead - Check for delamination and cracks. Check bonding area to the fuselage structure for disbonding. | V, T | | |
| 35. | Baggage bulkhead - Check for delamination and cracks. Check bonding area to the fuselage structure for disbonding. | V, T | | |
| 36. | Lower lap belt attachments - Check for delamination and cracks. Check bonding area to the fuselage structure for disbonding. | V | | |
| 37. | Lower lap belt fitting - Check for wear and corrosion. | V | | |
| 38. | Upper lap belt attachments - Check for delamination and cracks at the baggage bulkhead. | V, T | | |
| 39. | Baggage compartment floor supports - Check for delamination and cracks. Check bonding area to the fuselage structure for disbonding. | V | | |
| 40. | Gas spring supports - Check for delamination and cracks. Check bonding area to the fuselage structure for disbonding. | V | | |
| 41. | Composite tube stiffener and attachments - Check for delamination and cracks. Check bonding area to the fuselage structure for disbonding. | V | | |
| 42. | Baggage compartment door, doorframe and supports - Check for delamination and cracks. Check bonding area to the fuselage structure for disbonding. | V | | |
| 43. | Tailboom bulkheads - Check for delamination and cracks. Check bonding area to the fuselage structure for disbonding. | V | | |

| No. | Inspection Items Fuselage (Cont.) | Inspection Method | Finding / Condition | Initials |
|---|---|---|---|---|
| 44. | Elevator control lever mounting supports on baggage bulkhead - Check for delamination and cracks. Check bonding area to the fuselage structure for disbonding. | V | | |
| 45. | Flap actuator mounting supports in middle tunnel - Check for delamination and cracks. Check bonding area to the fuselage structure for disbonding. | V | | |
| 46. | Canopy frame (at the fuselage) - Check for delamination and cracks. | V, T | | |
| 47. | Step supports - Check for delamination and cracks. Check bonding area to the fuselage structure for disbonding. | V | | |
| 48. | Check step component for wear and corrosion. | V | | |
| **Canopy** | | | | |
| 49. | Canopy frame - Check for delamination and cracks. Check bonding area of Plexiglas to the canopy frame structure for disbonding. | V | | |
| 50. | Canopy latching components - corrosion, wear, damage. | V | | |
| 51. | Canopy pin and bushing components - Check for corrosion, wear and fit/play. | V | | |
| 52. | Canopy Plexiglas including side windows - cracks, damage. | V | | |

| No. | Inspection Items Landing Gear | Inspection Method | Finding / Condition | Initials |
|---|---|---|---|---|
| **Main Landing Gear** | | | | |
| 1. | Main landing gear struts - Check condition (distortion, corrosion, wear and paint damages). | V | | |
| 2. | Remove main wheels from axles and check axles for distortion, corrosion, wear and damages. | V | | |
| 3. | Check inner and outer main brackets for fit of shims, cracks and wear. | V | | |
| **Nose Landing Gear and Engine Mount** | | | | |
| 4. | Nose landing gear main strut and wheel fork - Check condition (cracks, distortion, corrosion, wear and paint damages). | V | | |
| 5. | Nose wheel steering tubes - Check condition (cracks and distortion). | V | | |
| 6. | Engine mount - Check the entire tube frame and all welded joints, in particular at the firewall and nose gear suspension, for distortion, wear and cracks. | V | | |

| No. | Inspection Items<br>Landing Gear (Cont.) | Inspection Method | Finding / Condition | Initials |
|---|---|---|---|---|
| 7. | Engine mount attachment bolts - Check for cracks and wear. | V | | |
| 8. | Nose wheel axle - Check for cracks and distortion. | V | | |

The aircraft is airworthy and meets the condition specified in the aircraft data sheet.
All prescribed 6000-hour inspection items and maintenance actions resulting thereof have been carried out.

Service Station:

Place, Date

Name, Signature of Mechanic | Name, Signature of Inspector | Stamp

## DAILY INSPECTIONS

1. General

   A. Pre-flight and post-flight checks must be carried out daily when the aircraft is in operation.

2. Pre-Flight Check

   A. This check must be carried out before the first flight of the day. In this way, the general condition of the aircraft and its engine can be ascertained. Pre-flight checks are essential for flight safety as numerous accidents can be traced back to inadequate pre-flight checks.

      The scope of the pre-flight check is listed in the AQUILA AT01 Flight Manual, section 4.

3. Post-Flight Check

   A. This check should be carried out after the final flight of the day. For the most part, it is a visual inspection.

   B. The check should contain all points of the pre-flight check.
      (1) Supplementary measures:
         (a) Re-fuel.
         (b) Check that the aircraft is properly parked (refer to 10-10).
         (c) Check the logbook entries for remarks about faults or defects, and for correct number of landings and flight hours.
         (d) If necessary, moor the aircraft (refer to 10-20).

# UNSCHEDULED MAINTENANCE CHECKS

1. General

A. Special checks are to be carried out when an incident has occurred that may have caused damage to the aircraft or impaired airworthiness.

In addition, a 25-hour inspection must be carried out on new aircraft and its engine, on overhauled engines and after extensive airframe repairs.

2. Special Checks

A. 25-Hour Inspection
After the first 25 hours of operation of a new aircraft and its engine or an overhauled engine or after extensive airframe repairs, an inspection of the extent of a 100-hour inspection must be carried out (refer to 05-20).

After the first 25 hours of operation of a new or overhauled engine, the engine and the propeller must be inspected. Refer to ROTAX Aircraft Engines Maintenance Manual for ROTAX Engines Type 912 Series for detailed information on this inspection.

B. Hard Landing
After an excessively hard landing or other unusual loading of the landing gear a thorough inspection of the affected components and their attachments is required. Even if no obvious defects are detectable, a visual inspection must be carried out. Perform the following:

(1) Prepare aircraft for visual checks as follows:
  (a) Remove engine cowling (refer to 71-10).
  (b) Remove landing gear fairings.
  (c) Inside the cabin and baggage compartment - remove carpets and floorboards as required to gain access to the landing gear mounting brackets (refer to 25-12).
(2) Inspect main landing gear.
  (a) Check wheel fairings for cracks, dents and delamination.
  (b) Check fairing mounts for cracks, distortion and other damage.
  (c) Check fuselage structure visually at such points and areas where the main landing gear is attached. Check for stress marks, distortion, disbonding, and delamination. Check main landing gear strut brackets for distortion, cracks and security of attachment. Check condition of the polyamide inserts. Check bolts for correct torque.
  (d) Check main gear struts for deformation and cracks. Examine wheel axles for security of attachment to struts and for any damage.
  (e) Inspect tires for integrity and proper location of the red slide marks.
  (f) Inspect brake fluid carrying lines at the main landing gear for condition, leakage, and security of attachment.

(3) Inspect nose landing gear.
  (a) Check wheel fairing for cracks, dents and delamination.
  (b) Inspect fairing mounts for cracks, distortion and other damage.
  (c) Check nose gear strut mount for deformation and cracks. Check nose gear strut journal bearing for proper operation and play.
  (d) Check strut for deformation, stress marks, and cracks. Check elastomer package for deterioration, cracks, correct fit and security. Check journal bearings of the elastomer package for play and condition.
  (e) Inspect nose wheel steering tubes for condition and excessive play.
  (f) Inspect tire for integrity and proper location of the red slide marks.
(4) Re-mount all items removed during the inspection.
(5) Perform a brake and steering system operational test (refer to 32-40).

C. Engine Fire
After an engine fire, carry out the following:

WARNING: IF IT IS SUSPECTED THAT PARTS OF THE STRUCTURE OR COWLING COULD HAVE BEEN DAMAGED BY HIGH TEMPERATURES (INDICATED BY BLISTERING ON THE PROTECTIVE COATING), THE MANUFACTURER MUST BE CONTACTED FOR DEFECT APPRAISAL BEFORE THE AIRCRAFT IS FLOWN AGAIN.

(1) Remove engine cowling (refer to 71-10).
(2) Examine engine cowling. Check for signs of fire damage.
(3) Disconnect battery (refer to 24-30).
(4) Examine electrical cables for damaged insulation.
(5) Examine fuel lines for damage of the fire-protection sleeves.
(6) Check oil lines for damage of the fire-protection sleeves.
(7) Check air filter element for fire damage.
(8) Examine engine mount and shock mounts for any fire damage.
(9) Check all other hoses and pipes, as well as all gaskets and seals for fire damage.
(10) Replace damaged items.
(11) Re-mount engine cowling (refer to 71-10).
(12) Perform an engine test run (refer to 05-20).

D. Violent Stop of the Engine
In event that the propeller has touched the ground or the engine has been inadvertently stopped violently (shock loading), the propeller gear box must be disassembled and inspected by an authorized workshop. For further information on engine inspections necessary after a propeller ground strike and for more general information, refer to the relevant technical documents and the ROTAX Maintenance Manual.

CAUTION: ONLY QUALIFIED TECHNICIANS (AUTHORIZED BY THE NATIONAL AVIATION AUTHORITY AND AFTER SUCCESSFULLY COMPLETING THE RELEVANT ROTAX TRAINING COURSE) ARE AUTHORIZED TO PERFORM THIS WORK.

Check additional equipment (external alternator, hydraulic governor, ignition unit, coolant and oil hoses) for damage.

# CHAPTER 06

# DIMENSIONS AND AREAS

## TABLE OF CONTENTS


| Title | Chapter Section Subject | Page |
|---|---|---|
| DIMENSIONS AND AREAS - GENERAL | 06-00-00 | 1 |
| Introduction | 06-00-00 | 1 |
| General Description | 06-00-00 | 1 |
| AIRCRAFT DIMENSIONS AND AREAS | 06-10-00 | 1 |
| General | 06-10-00 | 1 |
| Dimensions and Areas | 06-10-00 | 1 |
| Weight and Static Moments of Control Surfaces | 06-10-00 | 2 |
| AIRCRAFT ZONING | 06-20-00 | 1 |
| General | 06-20-00 | 1 |
| Description | 06-20-00 | 1 |
| ACCESS/INSPECTION PLATES | 06-30-00 | 1 |
| General | 06-30-00 | 1 |
| Description | 06-30-00 | 1 |

# DIMENSIONS AND AREAS - GENERAL

1. Introduction

   A. This chapter provides information about dimensions and control surface travel and tolerances. Furthermore, this chapter contains information about aircraft zoning and access and inspection plates.

   B. Dimensions are presented to aid the operator and/or maintenance personnel in the ground handling of the aircraft, e.g. in full hangars.
   Information concerning aircraft zoning and the position of access / inspection plates helps to locate and access aircraft components.

2. General Description

   The following sets out a brief description and intended purpose of each section of this chapter:

   A. Section 6-00-00 - Dimensions and Areas - General. This section provides a general overview of content and purpose of the chapter.

   B. Section 6-10-00 - Aircraft Dimensions and Areas. This section provides aircraft dimensions and identifies areas of the aircraft.

   C. Section 6-20-00 - Aircraft Zoning. This section shows illustrations of all aircraft zones.

   D. Section 6-30-00 - Access and Inspection Plates. This section contains the position and numbering of all access and inspection plates.

# AIRCRAFT DIMENSIONS AND AREAS

1. General

   A. The wing and tail spans are measured parallel to the relevant reference level.

   B. Refer to figure 1 for an illustration of aircraft dimensions.

2. Dimensions and Areas

Aircraft overall:

| | | |
|---|---|---|
| Wing span | 10,3 m | 33.8 ft |
| Overall length | 7,3 m | 23.9 ft |
| Height max. | 2,4 m | 7.9 ft |

Wing:

| | | |
|---|---|---|
| Wing profile | HQ 42 mod. | |
| Wing area | 10,5 m² | 113.6 ft² |
| Dihedral angle | +4,5 ° ± 0 ° | |
| Mounting angle | +2,5 ° ± 0 ° | |
| MAC | 1,07 m | 3.52 ft |
| Max. load | 71,4 kg/m² | |

Ailerons (both):

| | | |
|---|---|---|
| Area | 0,65 m² | 7.0 ft² |
| Up travel | 16 ° + 1,5 ° | |
| Down travel | 11 ° + 1,0 ° | |
| Neutral position | 0 ° up | |

Flaps (both):

| | | | |
|---|---|---|---|
| Area | | 1,23 m² | 13.31 ft² |
| Flap setting (ground) | | Tolerance Left | Right |
| Up | 0 ° | 0 ° | 0 ° |
| Take-off | 17 ° | ± 1,5 ° | ± 1,5 ° |
| Landing | 35 ° | ± 1,5 ° | ± 1,5 ° |

Horizontal Stabilizer and Elevator:

| | | |
|---|---|---|
| Profile | FX 71/L150-30 | |
| Area (entire) | 2,0 $m^2$ | 21.64 $ft^2$ |
| MAC | 0,68 m | 2.24 ft |
| Elevator area | 0,58 $m^2$ | 6.28 $ft^2$ |
| Up travel | 23 ° ±1,5 ° | |
| Down travel | 24 ° ±1,5 ° | |
| Span | 3,0 m | 9.87 ft |

Vertical Stabilizer and Rudder:

| | | |
|---|---|---|
| Profile | FX 71/L150-30 | |
| Area | 1,45 $m^2$ | 15.67 $ft^2$ |
| Rudder area | 0,44 $m^2$ | 4.76 $ft^2$ |
| Travel | 29 ° ±1,5 ° | |

Landing Gear:

| | | |
|---|---|---|
| Wheel track | 1,94 m | 6.36 ft |
| Wheel base | 1,69 m | 5.54 ft |
| Nose gear wheel size | 5.00-5 | |
| Main gear wheel size | 5.00-5 | |

3. Weight and Static Moments of Control Surfaces

| | Control surface weight kg | Control surface static moment Ncm |
|---|---|---|
| Aileron | 1,35 - 2,0 | 20 - 90 |
| Fowler flap[1)] | 2,7 - 3,4 | 500 - 660 |
| Elevator[2)] | 4,3 - 5,4 | -30 - +40 |
| Rudder | 3,5 - 4,5 | 20 - 80 |

1) Weights are given for one flap. The moment is given for both flaps in the 35° position, flap actuator disconnected.
2) Weights are given for elevator assembly including both elevator halves.

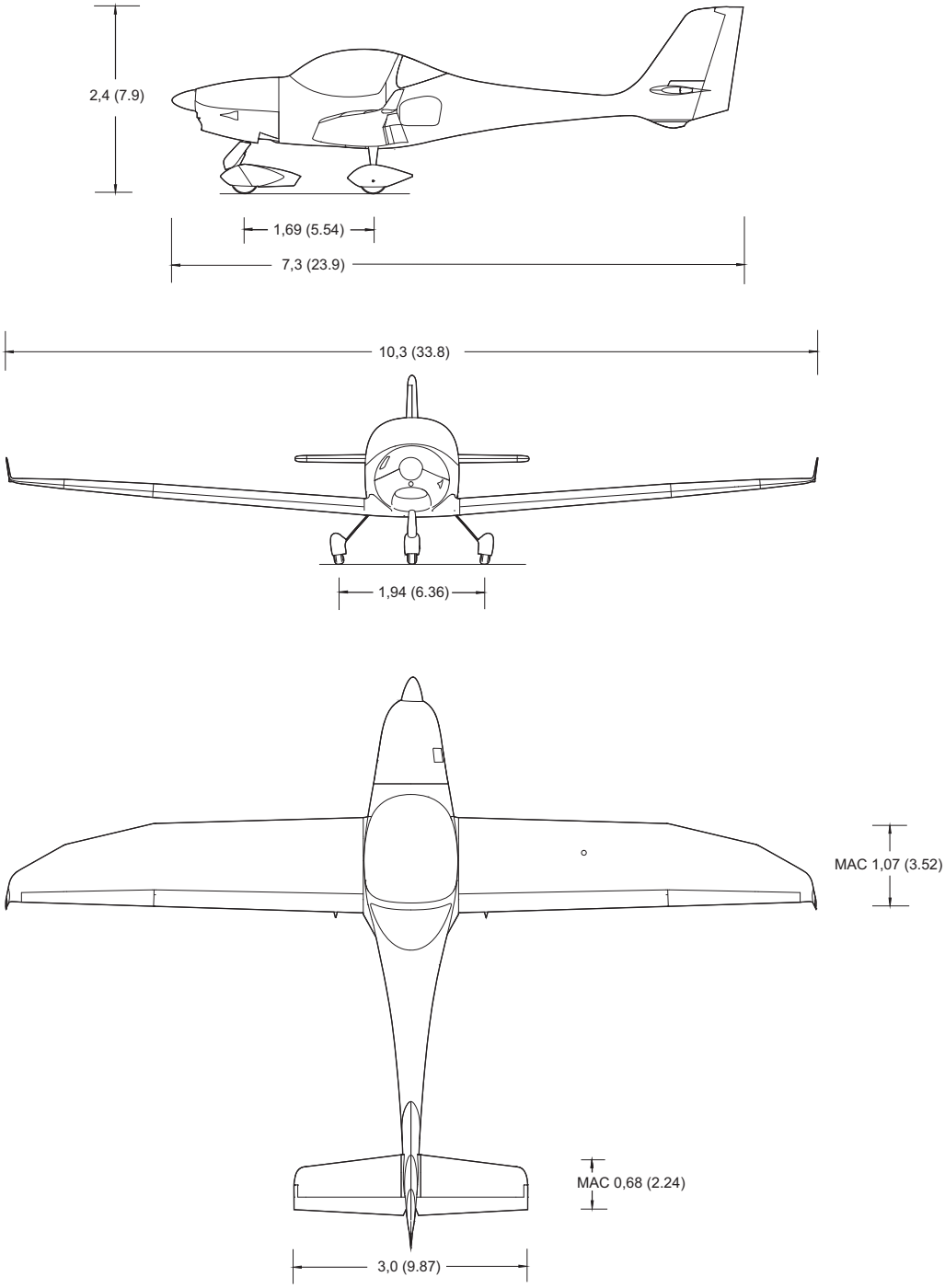


Aircraft Dimensions [m (ft.)]
Figure 1

## AIRCRAFT ZONING

1. General

A. The aircraft is divided into numbered zones to facilitate the location of aircraft components and parts. The zoning used here is standard.

B. The zones are identified by a three-digit number. The first digit in the sequence denotes the major zone:

Major zones:
(1) 100 - Forward side of firewall and forward.
(2) 200 - Aft side of firewall to rear door post of the baggage door.
(3) 300 - Rear door post of the baggage door to end of aircraft.
(4) 500 - Left wing.
(5) 600 - Right wing.
(6) 700 - Landing gear.

The second digit in the sequence divides the zones into sub-zones (zone 110 - propeller and spinner, zone 120 - upper and lower cowling). The third digit (if needed) divides the sub-zone into smaller subdivisions.

Example:

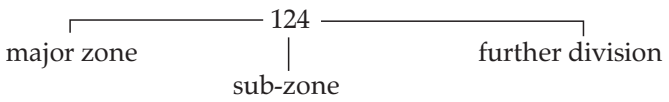


2. Description

A. For a classification of the aircraft zones, refer to figure 1.

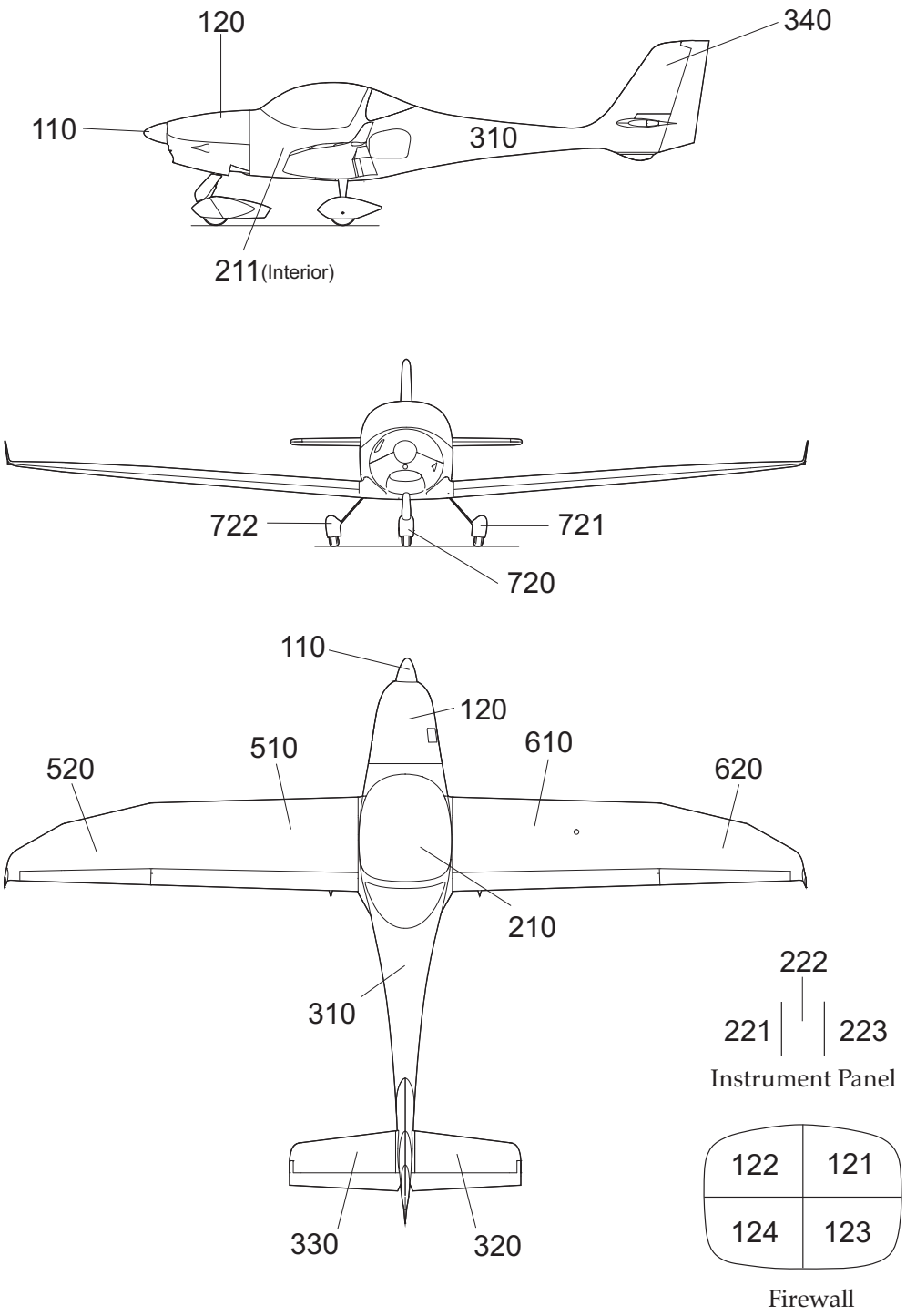


Aircraft Zones
Figure 1

## ACCESS & INSPECTION PLATES

1. General

A. Access / inspection plates are used to gain access to various systems, components and parts of structure during maintenance and for inspection.

B. The access and inspection plates are designated logically.

(1) Access / inspection plates numbering system:
All access / inspection plates are identified using a series of numbers and letters which specify the aircraft zone (see section 6-20-00) and location within this zone. Primary identifiers follow the three-number sequence, with the first plate identified as "A", the second as "B" and so on. Locators follow the primary identifier and denote top, left, right or internal orientation of the plate.

Example:

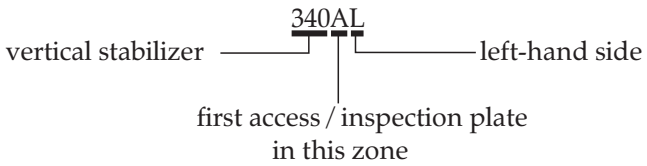


2. Description

A. For an illustration of the various access / inspection plates used on the aircraft, refer to figure 1.

| | |
|---|---|
| 210AB | Wing removal /installation, aileron / flap control systems, fuel system, wing structure (masked with cloth tape, e.g. Tesa 4651, to prevent intrusion of exhaust gases) |
| 510AB | Left flap actuation lever |
| 610AB | Right flap actuation lever |
| 510BB | Left inboard fuel tank rib, fuel / vent lines, fuel lever sender |
| 610BB | Right inboard fuel tank rib, fuel / vent lines, fuel lever sender |
| 520AB | Left aileron bellcrank |
| 620AB | Right aileron bellcrank |

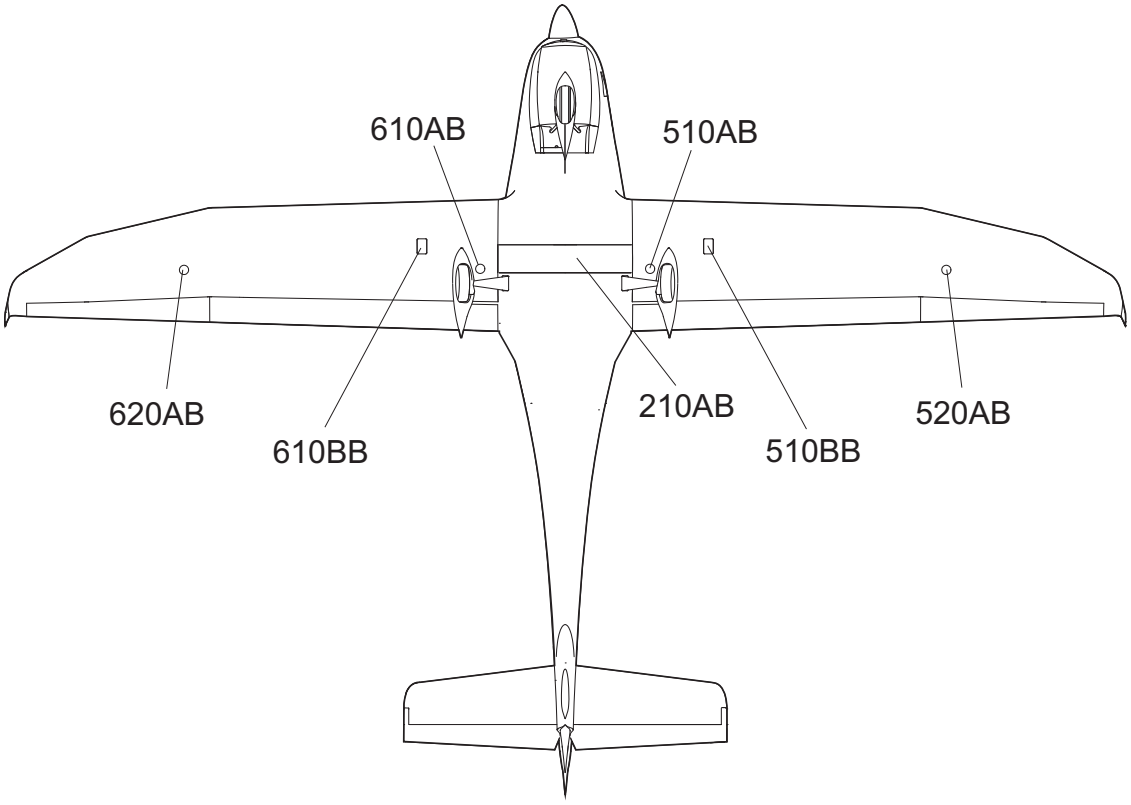


Access / Inspection Plates
Figure 1

# CHAPTER 07

# LIFTING AND SHORING

## TABLE OF CONTENTS


| Title | Chapter Section Subject | Page |
|---|---|---|
| LIFTING AND SHORING - GENERAL | 07-00-00 | 1 |
| Introduction | 07-00-00 | 1 |
| General Description | 07-00-00 | 1 |
| JACKING | 07-10-00 | 201 |
| General | 07-10-00 | 201 |
| Tools, Equipment and Material | 07-10-00 | 201 |
| Jacking | 07-10-00 | 201 |
| Hoisting | 07-10-00 | 202 |

# LIFTING AND SHORING - GENERAL

1. Introduction

   A. This chapter describes procedures used to jack the aircraft. The equipment required to jack the aircraft and the procedures to be followed are described.

2. General Description

   In the following, a brief description and intended purpose of each section of this chapter is given.

   A. Section 7-00-00 - Lifting and Shoring - General. This section provides a general overview of content and purpose of the chapter.

   B. Section 7-10-00 - Jacking. This section contains procedures, supplementary information and required equipment for jacking the aircraft.

# JACKING

## 1. General

A. The aircraft is jacked at two points and supported at the tail. The jack points are located at the bottom of the fuselage root ribs (see figure 201). Special adapters must be installed prior to jacking.

B. If necessary, the aircraft may be lifted on a hoist.

## 2. Tools, Equipment and Material

| | Quantity | Equipment | Parts No. | Manufacturer |
|---|---|---|---|---|
| 3.A | 2 | Jack | - | commercially available |
| 3.A | 2 | Adapter | | AQUILA Aviation GmbH |
| 3.A | 1 | Tail stand | - | commercially available |
| 3.A | 2 | Wing trestles | - | commercially available |

## 3. Jacking

A. Jacking the Aircraft

CAUTION: DO NOT JACK THE AIRCRAFT IN THE OPEN IF WIND VELOCITY EXCEEDS 6 KNOTS.

(1) Position the aircraft on a hard, flat, level surface. In the open, postion the aircraft with the nose into the wind.

CAUTION: ONLY USE JACKS IN COMBINATION WITH ADAPTERS DELIVERED BY AQUILA.

(2) Install adapters to jack points (marked red).
(3) Place jacks at the correct positions under the fuselage (see figure 201) and extend to engage with the jacking points.
(4) Remove wheel chocks.
(5) Place the tail stand with adapter under the lower fin and extend to engage with the lower fin skid plate. Secure tail stand lock.
(6) Raise jacks simultaneously, keeping the aircraft as level as possible.
(7) Secure jack locks.
(8) Place the wing trestles in position under each wing (zone 530 /630).

B. Lowering the Aircraft
(1) Remove the wing trestles from under the wings.
(2) Check that the areas immediately under and over the aircraft are clear.
(3) Slowly lower the jacks simultaneously, keeping the aircraft as level as possible.
(4) When the main tires are resting on the ground, lower the jacks completely and remove them.

(5) Remove tail stand.
(6) Remove adapters from jack points.

4. Hoisting

A. Hoisting Procedure
(1) The airplane may be lifted with a one metric ton (2205 lbs) hoist for maintenance purposes. The front sling is hooked to the two upper engine mount bars. The aft sling is positioned around the aft fuselage forward the vertical stabilizer.

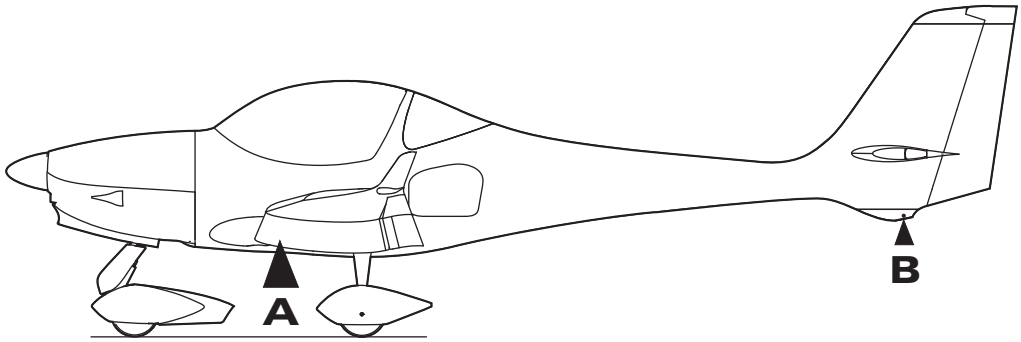


**A** - jack points (right / left hand)

**B** - tail stand positioning zone

Aircraft Jack Points
Figure 201

# CHAPTER 08

# LEVELING AND WEIGHING

## TABLE OF CONTENTS


| Title | Chapter Section Subject | Page |
|---|---|---|
| LEVELING AND WEIGHING - GENERAL | 08-00-00 | 1 |
| Introduction | 08-00-00 | 1 |
| General Description | 08-00-00 | 1 |
| Weighing | 08-10-00 | 201 |
| General | 08-10-00 | 201 |
| Tools, Equipment and Material | 08-10-00 | 201 |
| Weighing Procedure | 08-10-00 | 201 |
| Leveling | 08-20-00 | 201 |
| General | 08-20-00 | 201 |
| Tools, Equipment and Material | 08-20-00 | 201 |
| Leveling Procedure | 08-20-00 | 201 |

## LEVELING AND WEIGHING - GENERAL

1. Introduction

   A. This chapter provides all the necessary information to properly level the aircraft and to prepare it for weighing.

2. General Description

   In the following, a brief description and intended purpose of each section of this chapter is given.

   A. Section 8-00-00 - Leveling and Weighing - General. This section provides a general overview of content and purpose of the chapter.

   B. Section 8-10-00 - Weighing. This section contains maintenance practices, supplementary information and required equipment for weighing the aircraft.

   C. Section 8-20-00 Leveling. This section provides maintenance practices and required equipment for longitudinal and lateral leveling of the aircraft.

# WEIGHING

## 1. General

A. For safety and in order to achieve the performances and flying characteristics, which are designed in the aircraft, it should be flown with the weight and center of gravity (C.G.) position within the approved operating range.

Whenever new equipment is added or any modification work is done, which may have an effect on the empty weight or C.G. position, an empty weight determination and a center of gravity location is to be redefined.

## 2. Tools, Equipment and Material

| Required in | Quantity | Equipment | Parts No. | Manufacturer |
|---|---|---|---|---|
| 3.A. | 3 | Industry scales 500 kg (approx. 1100 lbs) Scale capacity | - | commercially available |

## 3. Weighing Procedure

A. Weighing can be carried out by means of mechanical or electrical scales. The instructions of the scale manufacturer are to be considered.

Preparation:
(1) Be certain that all items checked in the aircraft equipment list are installed in the proper location in the aircraft.
(2) Clean and dry the aircraft, remove foreign items such as bags, rags, tools, etc.
(3) De-fuel aircraft except for unusable fuel (refer to 12-11-00).
(4) Fill engine operating fluids (oil, coolant) and brake fluid up to the maximum markings (refer to 12-12-00, 12-14-00, 12-15-00).
(5) Move sliding seats to the most forward position.
(6) Retract flaps completely.
(7) Place all control surfaces in neutral position.

After these preparations, place scales under each wheel. Be sure that no side forces act on the scales to avoid wrong readings.
After this level the aircraft such as described in section 08-20-00 "Leveling".

NOTE: Weigh the aircraft inside a closed building to prevent errors in the scale readings due to wind.

Close the canopy and then weigh the aircraft. The weight shown on each scale can now be entered into the weight data form (see Abb.201). Deduct the non-aircraft parts, if any (i. e. wheel chocks), from each reading.

# AIRCRAFT WEIGHING REPORT

| MODEL: | SERIAL NUMBER: | REGISTRATION NUMBER: | DATE: |
|---|---|---|---|
| | | | |

Data in accordance with Airplane Flight Manual

Reference Datum: Leading edge of wing root rib.
Horizontal reference line: Refer to 08-20-00 for information on longitudinal leveling.
Weighing Conditions: Including brake fluid, eng. oil and coolant, unusable fuel.

Equipment list - dated: _____

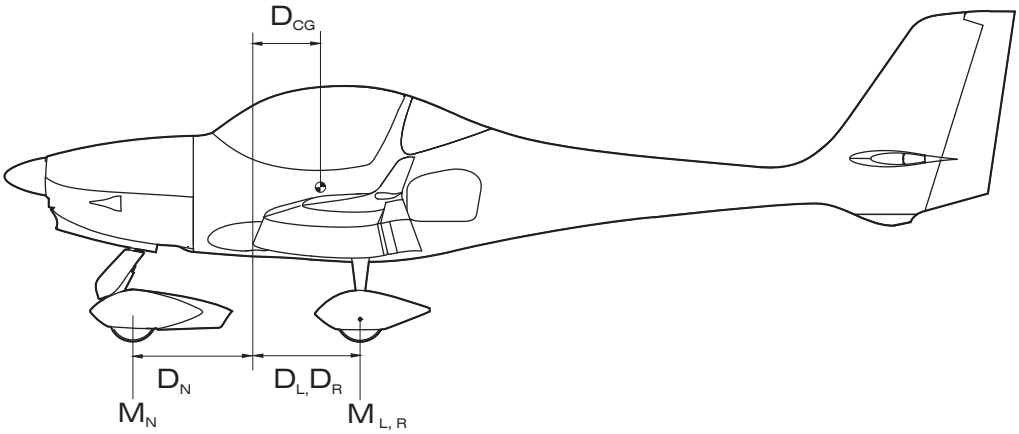


| Position | Gross ~ kg (lbs) | Tare ~ kg (lbs) | Net Weight ~ kg (lbs) | Lever Arm ~ m (in.) |
|---|---|---|---|---|
| Nose Wheel | | | $M_N$ = | $D_N$ = − |
| Right Main Wheel | | | $M_L$ = | $D_L$ = + |
| Left Main Wheel | | | $M_R$ = | $D_R$ = + |
| Empty Mass (Weight) $M_{Empty} = M_N + M_L + M_R$ = Kg (lbs) | | | | |

Empty Weight Moment: $MO_{Empty} = M_N \times D_N + M_L \times D_L + M_R \times D_R$ = kgm (in.lbs)

CG Position for Empty Weight: $D_{SL} = MO_{Empty} / M_{Empty}$ = m (in.)

| | | |
|---|---|---|
| Maximum Useful Load | + MTOW<br>− Empty Weight | +<br>− |
| | = Max. Useful Load | = |

Data to be entered into the Airplane Flight Manual, Section 6:

| Empty Weight ~ kg (lbs) | | Empty Weight Moment ~ kgm (in.lbs) |
|---|---|---|
| Location / Date | Stamp | Signature |

Aircraft Weighing Form
Figure 201

Obtain measurement „$D_N$“ and „$D_L$ / $D_R$“ (Refer Fig. 201) by dropping a plumb bob from leading edge of wing at root rib to a flat surface (floor).

NOTE: The distances „$D_N$“ and „$D_L$ / $D_R$“ must be measured on every weighing!

Further information for computing the C. G. are contained in the AQUILA AT01 Airplane Flight Manual, section 6.

# LEVELING

1. General

A. Before every weighing process, the aircraft is to be leveled.

2. Tools, Equipment and Material

| Required in | Quantity | Equipment | Parts No. | Manufacturer |
|---|---|---|---|---|
| 3. | 1 | Spirit level at least 1m (3.28 ft) length | - | commercially available |
| 3. | 1 | Straight Edge | - | commercially available |

3. Leveling Procedure

CAUTION: AFTER WEIGHING PROCEDURE IS ACCOMPLISHED, INFLATE TIRES TO RECOMMENDED OPERATING PRESSURES (REFER TO 12-16-00).

A. Longitudinal Leveling
(1) Place a wedge on fuselage tube (refer to Figure 201).
(2) Place a spirit level on top the wedge.
(3) To level the aircraft longitudinally, deflate nose gear tire to center bubble in level.

B. Lateral Leveling
(1) Open the canopy.
(2) Place a straight edge on top and perpendicular to cabin sidewalls, centered.
(3) Place level on top and parallel to straight edge, centered.
(4) To level aircraft laterally, deflate main gear tire to center bubble in level.

## Longitudinal Leveling

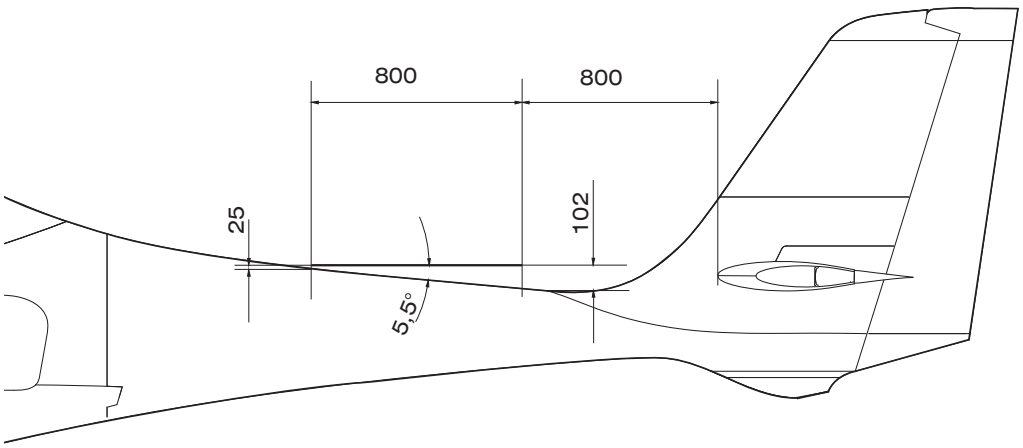


Wedge Positioning
Figure 201

# CHAPTER 09

# TOWING AND TAXIING

## TABLE OF CONTENTS


| Title | Chapter Section Subject | Page |
|---|---|---|
| TOWING AND TAXIING - GENERAL | 09-00-00 | 1 |
| Introduction | 09-00-00 | 1 |
| General Description | 09-00-00 | 1 |
| TOWING | 09-10-00 | 201 |
| General | 09-10-00 | 201 |
| Tools, Equipment and Material | 09-10-00 | 201 |
| Towing Procedure | 09-10-00 | 202 |
| TAXIING | 09-20-00 | 201 |
| General | 09-20-00 | 201 |
| Taxiing Procedure | 09-20-00 | 201 |

# TOWING AND TAXIING - GENERAL

1. Introduction

   A. This chapter describes the towing procedure and the taxiing procedure for the AQUILA AT01. It contains instructions as to how the aircraft can be moved without a tow bar.

2. General Description

   In the following, a brief description and intended purpose of each section of this chapter is given.

   A. Section 9-00-00 - Towing and Taxiing - General. This section provides a general overview of content and purpose of the chapter.

   B. Section 9-10-00 - Towing. This section contains procedures, supplementary information and required equipment for towing the aircraft.

   C. Section 9-20-00 - Taxiing. This section contains taxiing procedure.

# TOWING

1. General

A. The aircraft may be moved by hand with a tow bar or by a towing vehicle. In the following, the towing procedure is described.

2. Tools, equipment and materials Required

| Required in | Quantity | Equipment | Parts No. | Manufacturer |
|---|---|---|---|---|
| 3.A. | 1 | Tow bar | - | AQUILA A. b. E. AG |
| 3.B. | 1 | Tow bar (Vehicle) | - | AQUILA A. b. E. AG |

3. Towing procedure

A. Towing by Tow Bar

The AQUILA AT01 is usually moved manually by means of a tow bar. The following technique should be kept:

(1) Insert tow bar into nose wheel towing lugs.
(2) Remove wheel chocks.
(3) Tow the aircraft to desired location.
(4) Chock the main wheels fore/aft as required.
(5) Remove tow bar.

B. Towing With Tow Vehicle

The following procedure is to be kept if the aircraft should be moved by means of a vehicle:

CAUTION: WHILE TOWING THE AIRCRAFT WITH A VEHICLE, A PERSON SHOULD BE IN THE COCKPIT, IN ORDER TO BE ABLE TO APPLY THE BRAKES IN THE EVENT OF AN EMERGENCY.

DO NOT EXCEED THE NOSE GEAR TURNING ANGLE OF 20° EITHER SIDE OF CENTER, OR DAMAGE TO THE NOSE GEAR CANNOT BE EXCLUDED.

MAKE SURE THAT THE TOW BAR IS PROPERLY CONNECTED TO THE VEHICLE.

(1) Insert tow bar into nose wheel towing lugs.
(2) Attach the tow bar to tow vehicle.
(3) Remove any installed rudder lock.

(4) Release parking brake.
(4) Remove wheel chocks.
(5) Tow aircraft to desired location.
(6) Chock the main wheels fore/aft as required.
(7) If necessary install any rudder lock.
(8) Remove tow bar from tow vehicle and aircraft.

C. Moving Aircraft Without Tow Bar

CAUTION: DO NOT EXERT A PUSHING OR PULLING FORCE ON THE CONTROL SURFACES, THE PROPELLER TIPS, OR ON THE PROPELLER SPINNER.

(1) Turn Aircraft Around Main Wheels
Press down on the fuselage in front of the vertical stabilizer to raise the nose wheel off ground. With the nose wheel clear of the ground, the aircraft can be turned by pivoting about the main wheels.

# TAXIING

1. General

The AQUILA AT01 is controlled with a steerable nose wheel linked through the rudder pedals and toe operated brakes during taxiing.
While taxiing, the engine is to be operated as well as described in Section 4 of the AQUILA AT01 Airplane Flight Manual.

2. Taxiing procedure

A. To move the aircraft on ground by means of its engine consider the following:

WARNING! TAXIING OF THE AIRCRAFT MUST BE CARRIED OUT BY AUTHORIZED PERSONNEL ONLY.

(1) Remove all items (workshop trolley, GPU etc) near of the aircraft.
(2) Remove any control locks, wheel chocks, tow bar and tie-downs.

WARNING! CHECK ONCE MORE, NO MAINTENANCE PERSONNEL OR OTHER OBSTACLE IS NEAR OF THE AIRCRAFT.

(3) Start the engine (Refer to AQUILA AT01 Airplane Flight Manual, Section 4).
(4) Release parking brake.
(5) Power should be applied slowly to start the taxi roll. Taxi a few feet forward and apply brakes to determine their full effectiveness.
(6) While taxiing, use the steerable nose wheel to change direction..

WARNING! ALWAYS SELECT THE TAXI SPEED IN SUCH MANNER THAT IN THE EVENT OF BRAKE FAILURE A COLLISION WITH PERSONS OR STATIONARY OBJECTS IS EXCLUDED.

CAUTION! DO NOT OPERATE THE ENGINE AT HIGH RPM WHILE RUNNING UP OR TAXIING OVER GRAVEL, LOOSE STONES, OR ANY LOOSE MATERIAL, TO PREVENT ABRASION AND STONE DAMAGE TO THE PROPELLER BLADES.

(7) Taxi aircraft to the desired place.
(8) Shut down the engine (Refer to AQUILA AT01 Airplane Flight Manual, Section 4).
(9) Park and secure the aircraft as prescribed (Refer to Chapter 10).

# CHAPTER 10
# PARKING, MOORING, STORAGE AND RETURN TO SERVICE

## TABLE OF CONTENTS


| Title | Chapter Section Subject | Page |
|---|---|---|
| PARKING, MOORING, STORAGE AND RETURN TO SERVICE - GENERAL | 10-00-00 | 1 |
| Introduction | 10-00-00 | 1 |
| General Description | 10-00-00 | 1 |
| PARKING | 10-10-00 | 201 |
| General | 10-10-00 | 201 |
| Parking | 10-10-00 | 201 |
| STORAGE | 10-11-00 | 201 |
| Storage with a Duration up to 30 Days | 10-11-00 | 201 |
| Storage with a Duration up to 90 Days | 10-11-00 | 201 |
| MOORING | 10-20-00 | 201 |
| General | 10-20-00 | 201 |
| Tools, Equipment and Material | 10-20-00 | 201 |
| Mooring | 10-20-00 | 201 |
| RETURN TO SERVICE | 10-30-00 | 201 |
| Return to Service After a Storage up to 30 Days | 10-30-00 | 201 |
| Return to Service After a Storage up to 90 Days | 10-30-00 | 202 |

# PARKING, MOORING, STORAGE AND RETURN TO SERVICE - GENERAL

1. Introduction

This chapter provides instructions necessary to park and moor the aircraft.

2. General description

The chapter is subdivided into different sections in order to facilitate the location of required information the maintenance personnel. Subsequently, a short description of the sections:

A. Section 10-00-00 - Parking, Mooring, Storage and Return to Service - General. This section gives a survey via content and purpose of the chapter.

B. Section 10-10-00 - Parking. This section contains information as the airplane is to be parked.

C. Section 10-11-00 - Storage. The section provides instructions for proper storage of the aircraft.

D. Section 10-20-00 - Mooring. This section contains procedure, supplementary information and required equipment for anchoring the aircraft.

E. Section 10-30-00 - Return to Service. This section provides information about necessary service after storage in dependence of different duration of storage.

# PARKING

1. General

A. In order to protect the aircraft when it is parked in the open, the following parking instructions should be applied. The extent of the measures depends on park duration and weather conditions.

2. Parking

A. If the aircraft for shorter time is parked, the following procedure should be applied:

(1) Taxi or tow aircraft into parking position (Refer to Chapter 9).
(2) Head the aircraft into the wind if possible.
(3) If flaps down, retract flaps.
(4) Set parking brake.
(4) Chock main gear wheels.
(5) If necessary install any rudder lock.
(6) Install the pitot head cover.
(7) Close and lock canopy.

NOTE: When parking the aircraft in adverse weather conditions such as gusty or strong winds, it is recommended that the aircraft is stored indoors or secured outside more securely (Refer to 10-20-00).

## STORAGE

1. Storage - up to 30 Days

A. The following guidelines are applicable for situations in which the aircraft is not to be used for periods of time between 7 and 30 Days. They are meant to help prevent deterioration of the aircraft during periods of non-use.

(1) To prepare the engine for storage, check for correct oil level and add oil if necessary to bring the level to the full mark. Then, run the engine for at least five minutes at 1200 to 1500 RPM with oil and cylinder heat temperatures in the normal operating range. Shut down the engine.

(2) Top up the fuel tanks to prevent condensation of water in the tanks.

(3) Install covers over the cabin area to keep out moisture and sunlight. Install Pitot tube cover. To prevent oxidation of the finish, the use of covers over the composite fuselage during extended periods of outdoor tie-down, especially in summer time, is recommended.

WARNING: BEFORE ROTATING THE PROPELLER BLADES, MAKE CERTAIN THAT THE IGNITION SWITCH IS IN THE OFF-POSITION AND THE THROTTLE IS CLOSED.

CAUTION: DO NOT ROTATE THE PROPELLER CLOCKWISE.

(4) After every seven days during storage, rotate the propeller by hand. After rotating the engine six revolutions, stop the propeller 60° to 120° from its former position.

(5) If, at the end of 30 days, the aircraft will not be removed from storage, the engine should be started and run in a safe area. The preferred method is to fly the aircraft for at least 30 minutes.

2. Storage with a Duration up to 90 Days

A. For storage periods not to exceed 90 days, the following methods of treatment are required:

(1). Fuel system
(a) The fuel tanks must be filled completely with correct grade fuel.

(2) Engine
(a) Consult the ROTAX Aircraft Engines Operator's Manual for engine preservation recommendations for the installed engine.

(3) Electrical System
(a) Remove battery and store in a cool, dry room. Perform service as described in chapter 12 "Ground Services".
(b) Cover or mask any disconnected electrical leads to protect against corrosion.

(4) Airframe
(a) Clean aircraft inside and outside. Remove any oil or grease from surfaces.
(b) Wax aircraft thoroughly.

(5) Brakes
(a) Frequently apply brakes at least once week.

(6) Pitot tube
(a) Install a pitot head cover.

(7) Ventilation of the aircraft
(a) Ventilate aircraft well before store.
(b) In the open air, depending on external conditions (high humidity, high temperatures etc.) possibly ventilate aircraft several times during storage.

(8) Landing gear, wheels and tires
(a) Landing gear:
It is recommended to jack up the aircraft to relieve load of the landing gear.

(b) Wheels:
Rotate wheels at least once a week 3 - 4 revolutions to avoid brake/disc corrosion.

(c) Tire:
1 Clean any oil or grease from tires and treat with a tire protective.

The aircraft cannot be blocked up:
2 Rotate wheels. Mark position of the tire and date with chalk.

# MOORING

1. General

A. If the airplane is temporary stored in the open air, it should always be anchored. Strong wind and gusts of wind can cause great damage to an aircraft, which is not securely anchored.

2. Tools, Equipment and Material

| Required in | Quantity | Equipment | Parts No. | Manufacturer |
|---|---|---|---|---|
| 3.B. | 3 | Ropes | - | AQUILA A. b. E. AG |
| 3.B. | 2 | Tie-Down Rings | - | AQUILA A. b. E. AG |

3. Mooring

A. The aircraft has three tie-down points; two are located on the underside of the wings and the third is located on the lower fin.

B. Tie-down the aircraft as follows:
(1) Park aircraft, as in section 10-10-00 "Parking" described manner.
(2) Immobilize the ailerons and elevator by looping the seat belt around the control stick and pulling it tight.
(3) Chock the main gear wheels fore and aft.
(4) Screw tie-down ring into the adapter at the underside of each wing (red marked).
(5) Secure tie-down ropes to the wing tie-down rings and to the lower fin. Secure at approximately 45-degree angles to the ground and secure each rope to a ramp tie-down point.
(6) Install pitot cover.
(7) Remove all loose parts and foreign items, which can cause damage to the aircraft.

WARNING: REMOVE TIE-DOWN RINGS BEFORE FLIGHT. FLIGHT WITH INSERTED TIE-DOWN RINGS HAS NOT BEEN TESTED.

## RETURN TO SERVICE

1. After Storage with Duration of 5 - 30 Days

   A. After storage with duration of between 5 and 30 days, the following procedures are necessary for returning to service:
      (1) Perform a complete pre-flight check

2. After Storage with a Duration from 30 up to90 Days

   A. After storage with duration from 30 to 90 days, the following procedures are necessary for returning to service:

      (1) Remove aircraft from blocks (Refer to Chapter 7 "Lifting and Shoring").

      (2) Engine
         (a) In accordance with the practiced preserving measures, return engine to service as described in the ROTAX Aircraft Engines Operator's Manuel for installed engine model.
         (b) After removing spark plugs, rotate propeller several revolutions counterclockwise. Then reinstall spark plugs.
         (c) Check oil level and grade.

      (3) Fuel System
         (a) Check fuel filter and clean it if necessary
         (b) Check fuel tanks and lines for water and sediment. Drain fuel into clear cup and check for water and sediment. Drain until water or sediment is gone.

      (4) Electrical System
         (a) Check battery and install.
         (b) Remove all covers, which have been installed against corrosion at separate connections and restore connection.

      (5) Airframe
         (a) Remove any installed locks and all materials to cover openings.

      (6) Perform a thorough pre-flight inspection.

# CHAPTER 11

# PLACARDS AND MARKINGS

## TABLE OF CONTENTS


| Title | Chapter Section Subject | Page |
|---|---|---|
| PLACARDS AND MARKINGS - GENERAL | 11-00-00 | 1 |
| Introduction | 11-00-00 | 1 |
| General Description | 11-00-00 | 1 |
| EXTERIOR PLACARDS AND MARKINGS | 11-20-00 | 201 |
| General | 11-20-00 | 201 |
| Tools, Equipment and Material | 11-20-00 | 201 |
| Removal/Installation | 11-20-00 | 201 |
| Maintenance/Care | 11-20-00 | 201 |
| INTERIOR PLACARDS AND MARKINGS | 11-30-00 | 201 |
| General | 11-30-00 | 201 |
| Tools, Equipment and Material | 11-30-00 | 201 |
| Removal/Installation | 11-30-00 | 201 |

# PLACARDS AND MARKINGS - GENERAL

1. Introduction

   A. This chapter provides information about interior and exterior graphics, placards, labels and interior markings, their maintenance and repair.

2. General Description

   Below a brief description and intended purpose of each section of this chapter is given.

   A. Section 11-00-00 - Placards and Markings - General. This section provides a general overview of content and purpose of the chapter.

   B. Section 11-20-00 - Exterior Placards and Markings. This section gives maintenance and care instructions for external placards, graphics, markings etc. and contains information about the equipment and material required.

   C. Section 11-30-00 - Interior Placards and Markings. This section gives maintenance and care instructions for internal placards, graphics, markings etc. and contains information about the equipment and material required.

## EXTERIOR PLACARDS AND MARKINGS

1. General

A. This section gives maintenance and care instructions for exterior graphics, markings, etc.. Figure 201 shows the locations of the exterior placards and markings.

2. Tools, Equipment and Material

| | Quantity | Equipment | Parts No. | Manufacturer |
|---|---|---|---|---|
| 3.A. and B. | 1 | heat gun | - | commercially available |
| 3.A. and B. | as required | isopropyl alcohol | - | commercially available |
| 3.B. | 1 | needle | - | commercially available |
| 3.B. | 1 | handy, dense, closed cell foam block | - | commercially available |

3. Removal/Installation

A. Remove Self-Adhesive Placards

NOTE: Reference marks should be made on aircraft before removing old graphics.

(1) Warm the placard a little using a heat gun (approx. 40-50°C).
(2) Carefully separate a corner of the placard from the aircraft and then pull off parallel to the surface to remove it.
(3) Remove all traces of old adhesive by using a cloth with isopropyl alcohol as required.

B. Placing Self-Adhesive Placards
(1) Clean aircraft surface carefully. Remove all old adhesive traces using isopropyl alcohol.
(2) Remove paperliner from backside of placard to expose adhesive.
(3) Position top edge of the placard precisely.
(4) Work uniformly downward and apply placard to aircraft with a dry, clean cloth.
(5) Remove the premask (outer protective film) from the placard.
(6) Remove air bubbles by perforating bubble with a small needle and then flattening.

4. Maintenance/Care

A. The following instructions should be followed to guarantee a maximum service life for the graphics:
(1) Clean aircraft exterior surface (refer to 12-23-00).
(2) Do not use any solvents to clean the graphics.
(3) Test other cleaning agents on a small inconspicuous part of the graphic.

(4) Do not allow fuel to spill on to graphics. If fuel spills on to graphics, wipe off with a cloth and rinse with water thoroughly.
(5) Do not remove snow and ice from surfaces using sharp-edged instruments.
(6) If a high-pressure washer is used, keep nozzle at least 0,5 m (approx. 1.6 ft) from edge of graphic.

Note: Placards illustrated are not to scale.

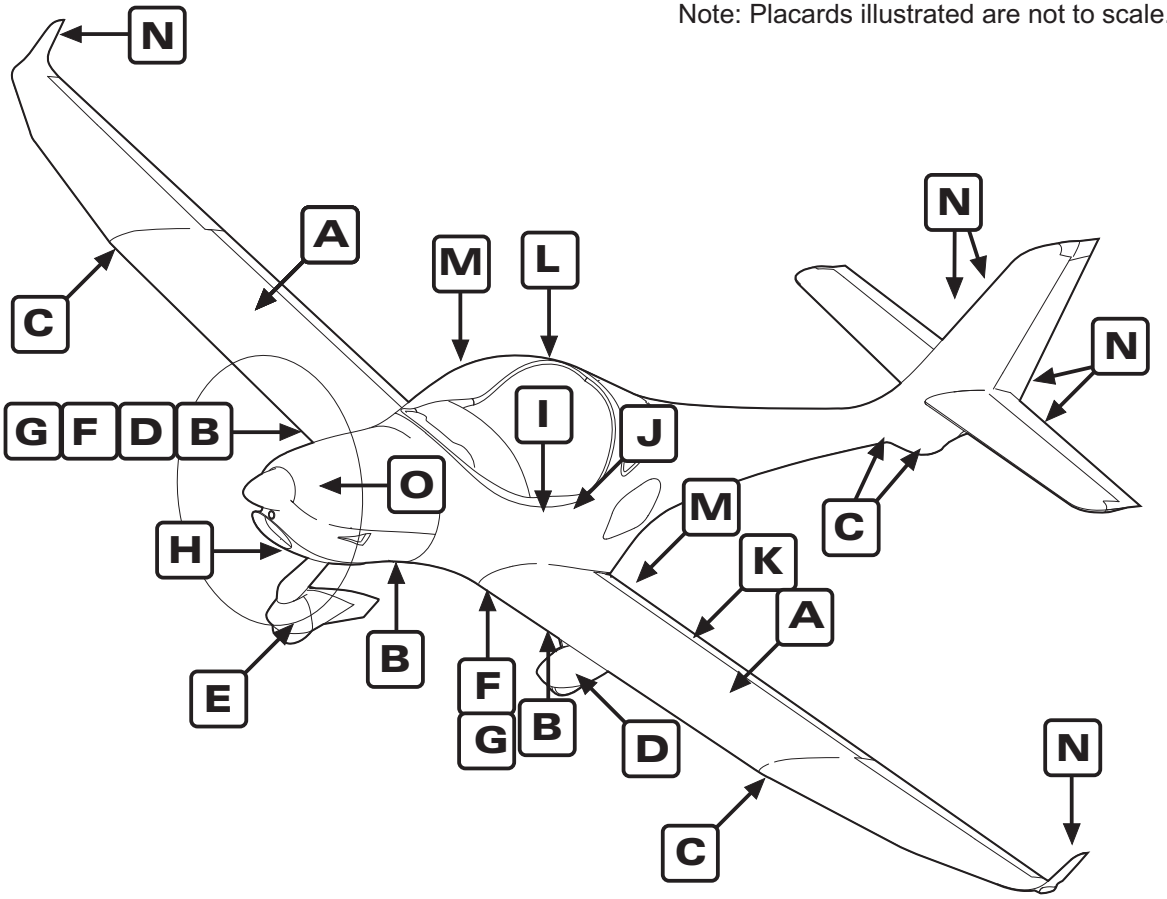

Detail-**A**

Exterior Placards and Markings
Figure 201 (1)

Note: Placards illustrated are not to scale.

| | | |
|---|---|---|
| KRAFTSTOFF ABLASS | Detail- **B** | FUEL DRAIN |
| VERZURRPUNKT | Detail- **C** | TIE DOWN |
| 2,5 bar | Detail- **D** | 36 psi |
| 2,0 bar | Detail- **E** | 29 psi |
| (red jack point markings) | Detail- **F** | |
| Aufbockpunkt | Detail- **G** | Jack Point |
| ⊥ Erdungspunkt Auspuffendrohr | Detail- **H** | ⊥ Electric Ground Exhaust Port |

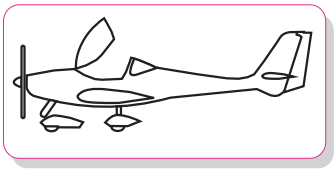

Detail- **I**

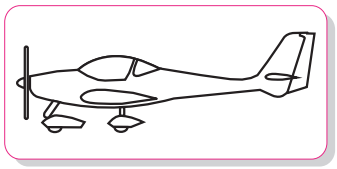

Detail- **J**

Exterior Placards and Markings
Figure 201 (2)

Note: Placards illustrated are not to scale.

Detail-**K**

(flap position markings )

ELT
HIER EINGEBAUT

Detail-**L**

ELT
INSTALLED HERE

Detail-**M**

NICHT SCHIEBEN

NO PUSH

Detail-**N**

Detail-**O**

Exterior Placards and Markings
Figure 201 (3)

Note: Placards illustrated not in scale.

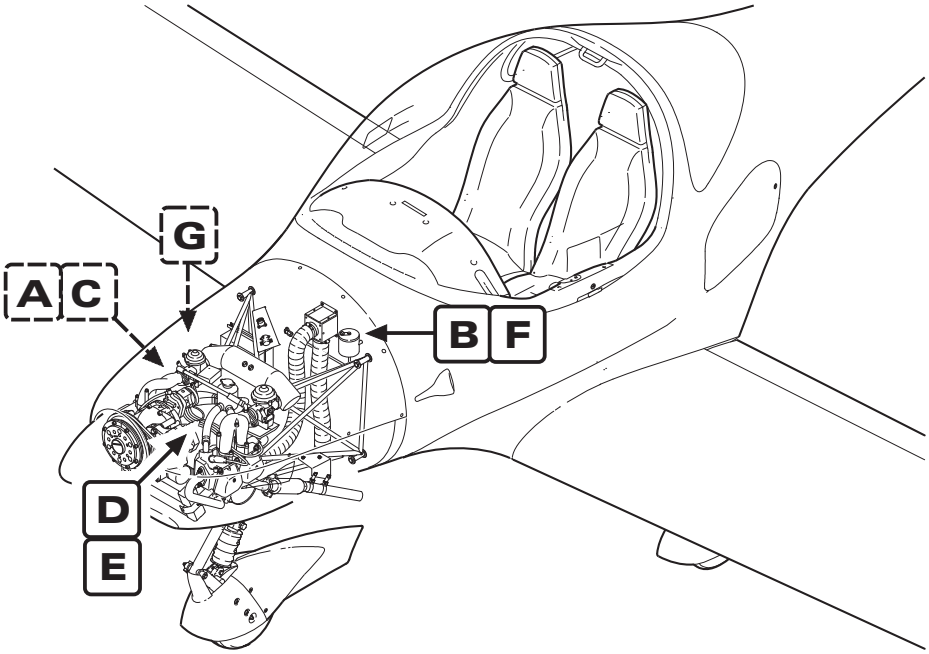


| | | |
|---|---|---|
| **! ACHTUNG !**<br>Kein Flugmotorenöl einfüllen.<br>Siehe Flughandbuch | Detail-**A** | **! CAUTION !**<br>DO NOT use aviation grade oil<br>Refer to POH |
| **! ACHTUNG !**<br>Keine Automobilbremsflüssigkeit verwenden.<br>Siehe Flughandbuch | Detail-**B** | **! CAUTION !**<br>DO NOT use automotive brake fluid<br>Refer to POH |
| **ÖLFÜLLUNG 3,0 Liter<br>SIEHE FLUGHANDBUCH** | Detail-**C** | **OIL CAPACITY<br>3.17 US quarts, 3,0 Liter<br>REFER to POH** |
| KÜHLMITTEL-<br>AUSGLEICHSGEFÄSS<br>**BEI HEISSEM TRIEBWERK<br>NICHT ÖFFNEN!** | Detail-**D** | COOLANT<br>**DO NOT OPEN<br>IF ENGINE IS HOT!** |
| **KÜHLWASSERFÜLLUNG 2,3 Liter<br>SIEHE FLUGHANDBUCH** | Detail-**E** | **COOLANT CAPACITY<br>2.43 US quarts, 2,3 Liter<br>REFER to POH** |
| HYDRAULIKÖL<br>FLUID 4 | Detail-**F** | HYD. BRAKE<br>FLUID (FLUID 4) |
| KÜHLMITTEL | Detail-**G** | COOLANT |

Exterior Placards and Markings
Figure 201 (4)

Note: Placards illustrated are not to scale.

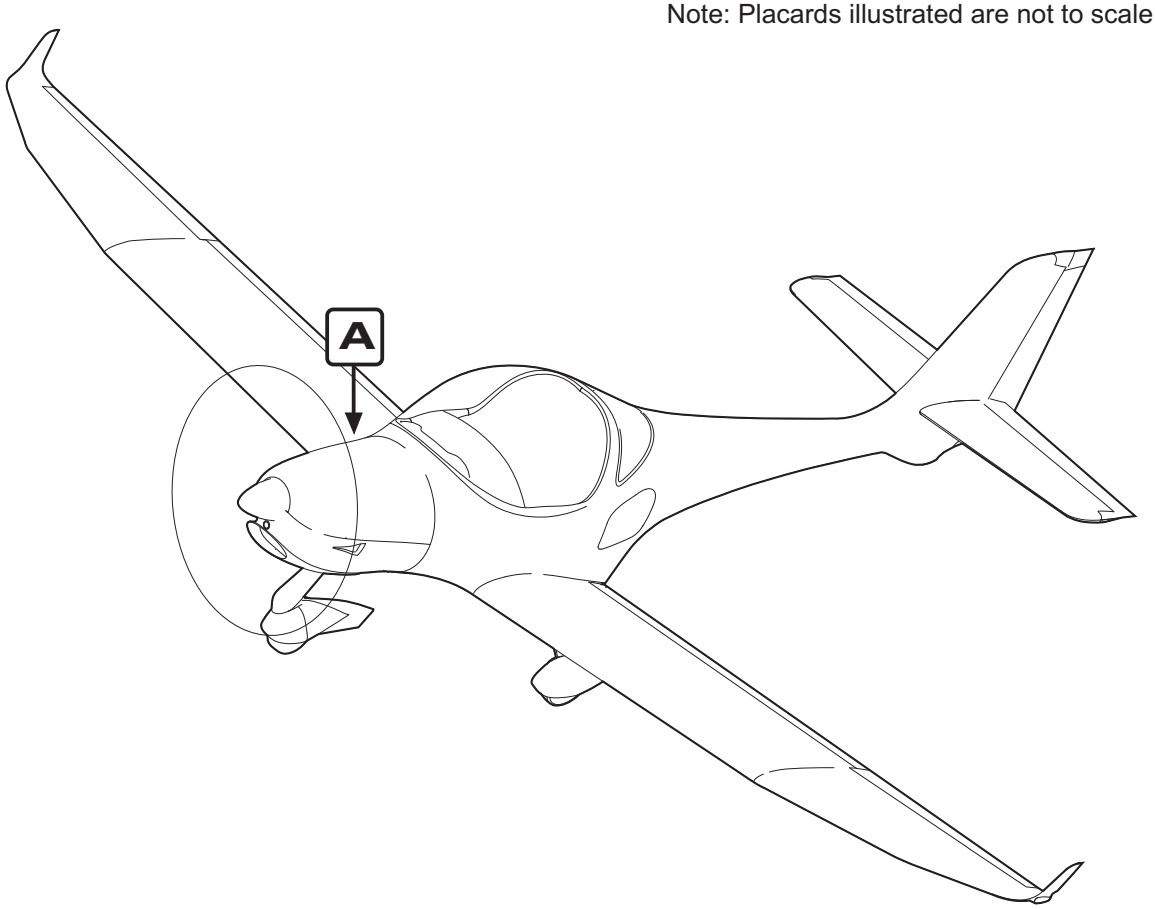


Externe
Stromversorgung
12 V DC

Detail-**A**

GROUND
POWER
12 VDC

Exterior Placards and Markings
Figure 201 (5)

## INTERIOR PLACARDS AND MARKINGS

1. General

A. This section gives information about removal and installation of interior placards, markings etc.. Figure 201 shows the aircraft interior placards and markings.

B. If the information on the placard is no longer legible or the placard is partially destroyed or is no longer in place, it must be replaced.

2. Tools, Equipment and Material

| | Quantity | Equipment | Parts No. | Manufacturer |
|---|---|---|---|---|
| 3.A | 1 | heat gun | - | commercially available |
| 3.A | as required | isopropyl alcohol | - | commercially available |
| 3.B | 1 | needle | - | commercially available |

3. Removal/Installation

A. Remove Self-Adhesive Placards
(1) Warm the placard a little using a heat gun (approx. 40-50°C).
(2) Carefully separate a corner of the placard from the aircraft and then pull off parallel to the surface to remove it.
(3) Remove all traces of old adhesive by using a cloth with isopropyl alcohol as required.

B. Placing Self-Adhesive Placards
(1) Remove protective film from backside of placard to expose adhesive.
(2) Position top edge of the placard precisely.
(3) Apply placard by rubbing with a dry, clean cloth.
(4) Remove air bubbles by perforating bubble with a small needle and then flattening.

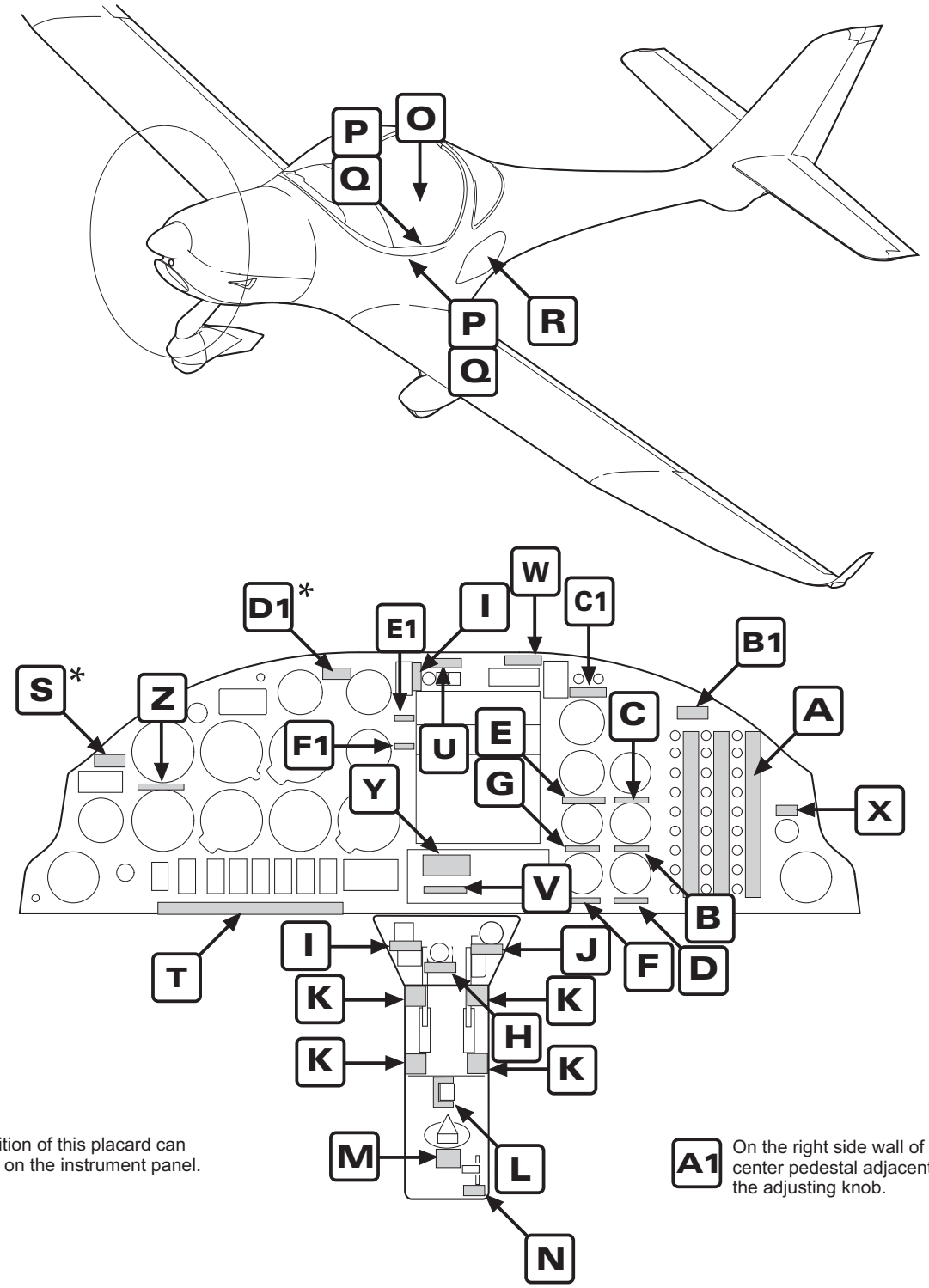


* Position of this placard can vary on the instrument panel.

A1 On the right side wall of the center pedestal adjacent to the adjusting knob.

Interior Placards and Markings
Figure 201 (1)

Note: Placards illustrated are not to scale.

| | | | | | |
|---|---|---|---|---|---|
| 1 | FLARM | 19 | Instru-mente 1 | 37 | Klappen-steuerung |
| 2 | Com 1 | 20 | Instru-mente 2 | 38 | Klappen Motor |
| 3 | Com 2 | 21 | Instru-mente 3 | 39 | Klappen Anzeige |
| 4 | Com/NAV 1 | 22 | 12V Steckd. | 40 | Trimm Strg |
| 5 | Com/NAV 2 | 23 | Batterie | 41 | Trimm Motor |
| 6 | Com/NAV | 24 | BAT | 42 | Avionik Lüfter |
| 7 | Intercom | 25 | Generator | 43 | ADC |
| 8 | Künstl Horizont | 26 | ALT1 | 44 | AHRS |
| 9 | Wende Zeiger | 27 | ALT2 | 45 | PFD |
| 10 | Höhen Kodierer | 28 | GEN1 Erregung | 46 | ACU |
| 11 | Kurs Kreisel | 29 | Kontr Leuchten | 47 | ADF |
| 12 | GPS | 30 | Innen Beleuchtung | 48 | MFD |
| 13 | Transponder | 31 | Instr-Brett Beleuchtung | 49 | TXP |
| 14 | Überzieh Warnung | 32 | Starter Relais | 50 | Traffic Monitor |
| 15 | OAT/CHT | 33 | Ladekontroll-leuchte | 51 | NAV/GPS 1 |
| 16 | CHT (OAT) | 34 | Audio | 52 | NAV/GPS 2 |
| 17 | Timer | 35 | Motor Instr 1 | 53 | CDI |
| 18 | Kraftstoff Vorrat | 36 | Motor Instr 2 | | |

| | | | | | |
|---|---|---|---|---|---|
| 1 | FLARM | 19 | Instru-ments 1 | 37 | Flap Control |
| 2 | Com 1 | 20 | Instru-ments 2 | 38 | Flap Actuator |
| 3 | Com 2 | 21 | Instru-ments 3 | 39 | Flap Control |
| 4 | Com/NAV 1 | 22 | 12V DC Receptacle | 40 | Trim Control |
| 5 | Com/NAV 2 | 23 | Battery | 41 | Trim Actuator |
| 6 | Com/NAV | 24 | BAT | 42 | Avionic Blower |
| 7 | Intercom | 25 | Alternator | 43 | ADC |
| 8 | Attitude Indicator | 26 | ALT1 | 44 | AHRS |
| 9 | Turn Coordinator | 27 | ALT2 | 45 | PFD |
| 10 | Blind Encoder | 28 | ALT1 Excitation | 46 | ACU |
| 11 | Directional Gyro | 29 | Warning Lights | 47 | ADF |
| 12 | GPS | 30 | Dome Light | 48 | MFD |
| 13 | Transponder | 31 | Panel Light | 49 | TXP |
| 14 | Stall Warning | 32 | Starter Relay | 50 | Traffic Monitor |
| 15 | OAT/CHT | 33 | Charge Light | 51 | NAV/GPS 1 |
| 16 | CHT (OAT) | 34 | Audio | 52 | NAV/GPS 2 |
| 17 | Timer | 35 | Instru-ments 1 | 53 | CDI |
| 18 | Fuel Gauge | 36 | Instru-ments 2 | | |

Detail-**A**

NOTE: Depending on equipment and serial number of the aircraft the placards shown may vary in presence and arrangement.

Interior Placards and Markings
Figure 201 (2)

Note: Placards illustrated are not to scale.

| | | |
|---|---|---|
| ÖLTEMPERATUR | Detail- **B** | OIL TEMP. |
| ZYL. KOPF TEMP. | Detail- **C** | CYL. HEAD TEMP. |
| ÖLDRUCK | Detail- **D** | OIL PRESS. |
| KRAFTSTOFF<br>109,6 LITER AUSFLIEGBAR | Detail- **E** | FUEL CAPACITY<br>28.9 GAL / 109.6 LITER USABLE |
| AMPEREMETER | Detail- **F** | AMMETER |
| VOLTMETER | Detail- **G** | VOLTMETER |
| HEIZUNG<br>ZIEHEN EIN | Detail- **H** | CABIN HEAT<br>PULL ON |
| VERGASERVORW.<br>ZIEHEN EIN | Detail- **I** | CARB. HEAT<br>PULL ON |
| CHOKE<br>ZIEHEN EIN | Detail- **J** | CHOKE<br>PULL ON |
| VOLLGAS / START Max. RPM | Detail- **K** | OPEN / HIGH RPM |
| LEERLAUF / Min. RPM REISE | | IDLE / LOW RPM |

Detail- **L**

Interior Placards and Markings
Figure 201 (3)

Note: Placards illustrated are not to scale.

Detail-**M**

Detail-**N**

Detail-**O**

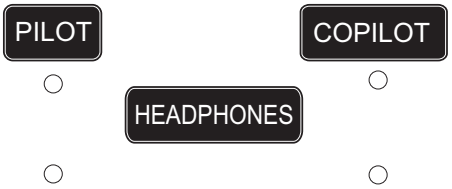


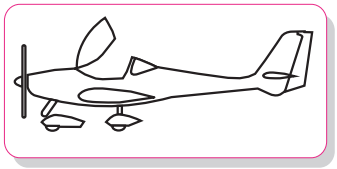

Detail-**P**

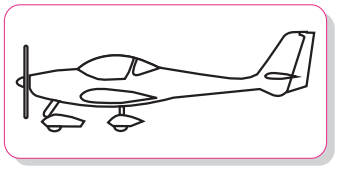

Detail-**Q**

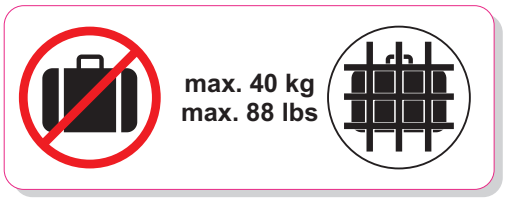


Detail-**R**

Detail-**S**

Interior Placards and Markings
Figure 201 (4)

Note: Placards illustrated are not to scale.

| ALT1 / BAT | Kraftst.-Pumpe AUX | PFD | Avionik | Positions-lichter | ACL | Lande-licht | Instrumenten-beleuchtung | P/S Heat |
|---|---|---|---|---|---|---|---|---|
| | | 1) | | | | | | 2) |

Detail-**T**

| ALT1 / BAT | Fuel Pump AUX | PFD | Avionics | Nav Lights | ACL | Landing Light | Instrument Lights | P/S Heat |
|---|---|---|---|---|---|---|---|---|

| ALT1 | ALT2 | KRAFTSTOFF-DRUCK | SPANNUNG | P/S HEAT |
|---|---|---|---|---|
| | 4) | | | 2) |

Detail-**U**

| ALT1 | ALT2 | FUEL | VOLT | P/S HEAT |
|---|---|---|---|---|

**GPS NUR ZUR INFORMATION** Detail-**V** 3) **GPS FOR INFORMATION ONLY**

**ELT-FERNBEDIENUNG**
ELT Hauptschalter
auf ARMED stellen!

Detail-**W**

**ELT-REMOTE CONTROL**
Switch ELT-transmitter
to ARM !

**STECKDOSE**
**12 - 14 V**
**max. 5 A**

Detail-**X**

**RECEPTACLE**
**12 - 14 V DC**
**MAX: 5 A**

Dieses Flugzeug ist in der Kategorie VLA zertifiziert und nur für den Betrieb VFR-Tag ohne Vereisungs-bedingungen zugelassen. Alle Kunstflugmanöver, einschließlich beabsichtigtem Trudeln, sind verboten. Weitere Betriebsgrenzen stehen im Flughandbuch.

Detail-**Y**

This aeroplane is classified as a very light aeroplane approved for day VFR only in non-icing conditions. All aerobatic manoeuvres, including intentional spinning are prohibited. See Flight Manual for other limitations.

Dieses Flugzeug ist in der Kategorie VLA zertifiziert und für den Betrieb VFR-Tag und VFR-Nacht ohne Vereisungs-bedingungen zugelassen. Alle Kunstflugmanöver, einschließlich beabsichtigtem Trudeln, sind verboten. Weitere Betriebsgrenzen stehen im Flughandbuch.

Detail-**Y** 4)

This aeroplane is classified as a very light aeroplane for day VFR and night VFR in non-icing conditions. All aerobatic manoeuvers including intentional spinning are prohibited. See Flight Manual for other limitations.

1) Aircraft equipped with Aspen avionics only.
2) Aircraft equipped with pitot heating system only.
3) Aircraft equipped with non-(E)TSO'd GPS-receiver only.
4) Aircraft equipped for Night-VFR only.

Interior Placards and Markings
Figure 201 (5)

Note: Placards illustrated are not to scale.

Manövergeschwindigkeit
VA = 112 kts

Detail-**Z**

Maneuvering Speed
VA = 112 kts

REIBVERSTELLUNG
Leistung / Propeller

Detail-**A1**

FRICTION LOCK
Power / Prop

ELT und Feuerlöscher
hinter dem Copilotensitz

Detail-**B1**

ELT and Fire-Extinguisher
behind Copilot seat

0
I-BRETT-
BELEUCHTUNG
DIMM
POSTLIGHTS
INSTRUMENTE

Detail-**C1**

0
PANEL
LIGHT
DIM
POSTLIGHTS
INSTRUMENTS

| FOR | N | 30 | 60 | E | 120 | 150 |
|---|---|---|---|---|---|---|
| STEER | | | | | | |
| FOR | S | 210 | 240 | W | 300 | 330 |
| STEER | | | | | | |
| DATE: | | | | | AIRPATH C2300 | |

Detail-**D1**

COM/NAV 1

Detail-**E1**

COM/NAV 2

Detail-**F1**

Interior Placards and Markings
Figure 201 (6)

# CHAPTER 12

# SERVICING

## TABLE OF CONTENTS


| Title | Chapter Section Subject | Page |
|---|---|---|
| SERVICING - GENERAL | 12-00-00 | 1 |
| Introduction | 12-00-00 | 1 |
| General Description | 12-00-00 | 1 |
| REPLENISHING - DESCRIPTION | 12-10-00 | 1 |
| General | 12-10-00 | 1 |
| Fuel | 12-10-00 | 1 |
| Engine Oil | 12-10-00 | 2 |
| Hydraulic Fluid | 12-10-00 | 2 |
| FUEL - SERVICING | 12-11-00 | 301 |
| General | 12-11-00 | 301 |
| Safety and Maintenance Precautions | 12-11-00 | 301 |
| Fueling and Defueling | 12-11-00 | 302 |
| ENGINE OIL - SERVICING | 12-12-00 | 301 |
| General | 12-12-00 | 301 |
| Checking Engine Oil | 12-12-00 | 301 |
| Oil Change Intervals | 12-12-00 | 301 |
| Oil Changing | 12-12-00 | 302 |
| INDUCTION AIR FILTER - SERVICING | 12-13-00 | 301 |
| General | 12-13-00 | 301 |
| Air Filter Changing | 12-13-00 | 301 |
| Air Filter Cleaning | 12-13-00 | 301 |
| COOLING SYSTEM - SERVICING | 12-14-00 | 301 |
| General | 12-14-00 | 301 |
| Adding Coolant | 12-14-00 | 302 |
| Renewal of the Coolant | 12-14-00 | 302 |
| Flushing the Cooling System | 12-14-00 | 302 |
| BRAKE SYSTEM - SERVICING | 12-15-00 | 301 |
| General | 12-15-00 | 301 |
| Hydraulic Fluid Replenishing | 12-15-00 | 301 |
| TIRES - SERVICING | 12-16-00 | 301 |
| General | 12-16-00 | 301 |
| Tire Servicing | 12-16-00 | 301 |

TABLE OF CONTENTS (Cont.)


| Title | Chapter Section Subject | Page |
|---|---|---|
| BATTERY - SERVICING | 12-17-00 | 301 |
| General | 12-17-00 | 301 |
| Battery Servicing | 12-17-00 | 301 |
| SCHEDULED SERVICING - DESCRIPTION | 12-20-00 | 1 |
| General | 12-20-00 | 1 |
| LUBRICANTS - DESCRIPTION | 12-21-00 | 1 |
| General | 12-21-00 | 1 |
| Service Notes | 12-21-00 | 1 |
| Definition of „As Needed“ | 12-21-00 | 1 |
| Recommended Lubricants | 12-21-00 | 2 |
| LUBRICATION - SERVICING | 12-22-00 | 301 |
| General | 12-22-00 | 301 |
| Lubrication Chart | 12-22-00 | 301 |
| AIRCRAFT EXTERIOR - CLEANING AND CARE | 12-23-00 | 701 |
| General | 12-23-00 | 701 |
| Safety Precautions | 12-23-00 | 701 |
| Cleaning and Care of the Canopy | 12-23-00 | 701 |
| Cleaning and Care of the Aircraft Exterior Surfaces | 12-23-00 | 702 |
| Cleaning and Care of Navigation / Position / Anti-Collision Lights | 12-23-00 | 702 |
| Cleaning the Engine | 12-23-00 | 703 |
| Cleaning and Care of the Propeller | 12-23-00 | 704 |
| Cleaning the Landing Gear | 12-23-00 | 704 |
| AIRCRAFT INTERIOR - CLEANING AND CARE | 12-24-00 | 701 |
| General | 12-24-00 | 701 |
| Aircraft Interior Cleaning | 12-24-00 | 701 |
| Cleaning the Instrument Panel | 12-24-00 | 701 |
| Cleaning the Cabin Floor | 12-24-00 | 701 |
| Cleaning the Seats | 12-24-00 | 701 |
| UNSCHEDULED SERVICING | 12-30-00 | 301 |
| General | 12-30-00 | 301 |
| Removing Snow and Ice | 12-30-00 | 301 |

# SERVICING - GENERAL

1. Introduction

   A. This chapter gives information on the replenishment of fluids and the lubrication of components. The chapter also contains instructions required to carry out scheduled servicing.

2. General Description

   The chapter is designed to help authorized personnel to correctly service the aircraft.
   Below a brief description and intended purpose of each section of this chapter is given.

   A. Section 12-00-00 - Servicing - General. This section provides a general overview of content and purpose of the chapter.

   B. The subsequent sections are divided into 3 groups.
      (1) Replenishment Fluids
      Provides information for the maintenance personnel to help them to correctly perform the necessary servicing during daily aircraft operation. This group begins with section 12-10-00 - Replenishing - Description. The section includes approved fluids specifications and information about tank and reservoir capacities.

      (2) Scheduled Servicing
      Provides information for the maintenance personnel to help them to correctly perform periodic servicing, such as lubricating components or cleaning the aircraft. This group begins with section 12-20-00 Scheduled Servicing Description.

      (3) Unscheduled Servicing
      Provides information for the maintenance personnel to help them to correctly perform servicing, which is carried out at irregular intervals, for example removing ice and snow.

## REPLENISHING - DESCRIPTION

1. General

A. This chapter provides information about fluids which must be replenished during operation.

2. Fuel

A. Fuel Capacity

| | Liters | U.S. Gallons |
|---|---|---|
| Total Capacity | 120,0 | 31.7 |
| Usable Fuel | 109,6 | 29.0 |
| Unusable Fuel | 10,4 | 2.7 |

B. Fuel Specification
The following fuel is approved for use in the AQUILA AT01. The minimum RON should be 95.

EN 228 Super (Premium)
EN 228 Super plus (Premium plus)
AVGAS 100 LL (Grade ASTM-D910, blue color)
AVGAS UL 91 (Grade ASTM-D7547)

WARNING: ONLY USE FUEL SUITABLE FOR THE RESPECTIVE CLIMATIC ZONE.

NOTES: For fuel specifications set down by the FAA, refer to standard spec. for automotive spark-ignition engine fuel ASTM D 4814.

There is a risk of vapor formation if winter fuel is used for summer operation.

Due to the higher lead content in AVGAS, wear of the valve sets and deposits in combustion chamber and lead sediments in the lubrication system will increase. It is, therefore, recommended to use AVGAS only if problems with vapor lock are experienced or if the other fuel types are not available.

3. Engine Oil

A. Engine Oil Capacity

| | Liters | U.S. Quarts |
|---|---|---|
| Engine oil capacity | 3,0 | 3.17 |
| Initial filling | 3,5 | 3.70 |
| Minimum | 2,5 | 2.64 |

B. Oil Specification

CAUTION: DO NOT USE AVIATION GRADE ENGINE OIL.

IF MORE THAN 30% OF OPERATION HOURS HAVE BEEN FLOWN WITH LEADED FUEL (E.G. AVGAS 100LL), AN OIL CHANGE SHOULD BE UNDERTAKEN EVERY 50 H (REFER TO ROTAX AIRCRAFT ENGINES SERVICE INFORMATION SI-912-016).

(1) Only use oil with ROTAX Norm (RON) 424 classification.
(2) Due to the high stresses in the reduction gears, oils with gear additives such as high performance motor cycle oils must be used.
(3) Because of the incorporated friction clutch, oils with friction modifier additives are unsuitable as this could result in a slipping clutch during normal operation.
(4) Heavy duty 4-stroke motor cycle oils meet all requirements. These oils are normally not mineral oils but semi- or full synthetic oils.
(5) Diesel engine oils are generally unsuitable due to temperature properties and additives which favor clutch slipping.

NOTE: For more information on the necessary lubricants, refer to Rotax Aircraft Engines Service Information SI-912-016.

C. Recommended Oil Viscosity for various Air Temperatures:

| Mean ambient temperature | Multi grade oils | |
|---|---|---|
| 0°C (32 °F) to 40°C (104 °F) | SAE 20W-50 | SAE 20W-40 |
| -10°C (14 °F) to 40°C (104 °F) | SAE 15W-50 | SAE 15W-40 |
| -20°C (-4 °F) to 40°C (104 °F) | SAE 10W-40 | SAE 10W-30 |
| -30°C (-22 °F) to 40°C (104 °F) | SAE 5W-50 | SAE 5W-40 |

4. Hydraulic Fluid

A. Only hydraulic fluid fulfilling the MIL-H-5606 specification should be used.

# FUEL - SERVICING

1. General

A. Fuel Tanks
(1) The aircraft is equipped with two integral wing fuel tanks.
The fuel tanks are located inside each wing between the front and rear spars. Each fuel tank has a filler cap on the top wing surface.

B. Drain System
(1) The fuel system is equipped with drain valves to allow examination for contamination, water and for de-fueling.
Each wing fuel tank has a drain valve at the bottom, inboard rear corner. A further drain valve is located at the lowest point of the fuel system; at the base of the electrical fuel pump. The drain is accessible from outside the nose section.
The center of the fuel drains can be pushed inward with the fuel sampler to inspect for water and contamination.

NOTE: Chapter 28 (Fuel) contains more detailed information about the fuel system.

2. Safety and Maintenance Precautions

A. Safety Precautions

WARNING: SERVICEABLE FIRE FIGHTING EQUIPMENT MUST BE AVAILABLE DURING ALL FUEL SYSTEM SERVICING PROCEDURES.

AIRCRAFT AND FILLING FITTINGS MUST BE GROUNDED.

ALL ELECTRICAL EQUIPMENT IN THE AIRCRAFT SHOULD BE TURNED OFF. THE ALT/BAT SWITCH SHOULD BE IN THE "OFF" POSITION AND THE IGNITION KEY REMOVED FROM THE AIRCRAFT.

NO SMOKING!

(1) Before beginning maintenance, a serviceable fire extinguisher (at least foam extinguisher) must be positioned within easy access.
(2) Do not wear clothing that has a tendency to generate static electricity (i.e. synthetic fabrics).
(3) No metal tabs on footwear.
(4) Carry out fuel system servicing procedures only in a designated fuel loading/unloading area.
(5) Ground equipment near the aircraft must be turned off.
(6) While filling do not turn on any electrical device.
(7) Make sure that the aircraft and filling fittings are properly grounded:
(a) First ground the aircraft;
(b) If a mobile filling device is being used, ground the filling device (same potential as aircraft);
(c) Ground the mobile filling device with the aircraft.

B. Maintenance Precautions
(1) Use designated equipment for fuel loading / unloading to prevent contamination.
(2) Only use approved anti-icing additive.
(3) Blend fuel in accordance with prescribed procedures.
(4) Document all fuel blending.

3. Fueling and Defueling

A. Fueling
(1) Move aircraft to a designated fuel loading / fuel unloading area.
(2) Make sure that the ALT/BAT switch is in the OFF position.
(3) Ground aircraft and filling device as described above.
(4) Position a fire extinguisher near to the fuel tank to be serviced.
(5) Remove fuel filler cap and fill fuel tank to desired level.
(6) Remove fuel service nozzle and install fuel cap.
(7) Move fire extinguisher and the fuel service nozzle to the other tank to be filled.
(8) Remove fuel filler cap and fill fuel tank to desired level.
(9) Remove fuel service nozzle and install fuel cap.
(10) Check correct lock of both fuel filler caps. Remove excess fuel from the wing area using a cloth.
(11) Remove ground cables.
(12) Compare reading of fueled amount on filling device with readings on the fuel indicators in the aircraft.

B. Defueling
(1) Move aircraft to a designated fuel loading / fuel unloading area.
(2) Make sure you have enough fuel collectors.
(3) Make sure that the ALT/BAT switch is in the OFF position.
(4) Ground aircraft and filling device as described above.
(5) Position a fire extinguisher near to the fuel tank to be defueled.
(6) Remove fuel cap and remove as much fuel as possible using a defueling nozzle.
(7) Install fuel cap.
(8) Move fire extinguisher and the defueling nozzle to the other tank to be defueled.
(9) Remove fuel cap and remove as much fuel as possible using a defueling nozzle.
(10) Install fuel cap.
(11) Drain remaining fuel from each wing fuel tank.
(12) Drain remaining fuel from the drain valve located at the base of the electrical fuel pump with the fuel selector valve in the position LEFT and then in the position RIGHT.
(13) Make sure all drain valves are closed securely.
(14) Remove ground cables.

## ENGINE OIL - SERVICING

1. General

A. This chapter provides information for checking and changing engine oil.

B. The oil filler cap of the oil tank is located on the right side of the engine behind cylinder no. 3. It is accessible by opening the oil access plate on the upper cowling. The oil filler cap has a dipstick with min - max markings to check oil level.

WARNING: AVOID SKIN CONTACT WITH ENGINE OIL. USED OIL IN PARTICULAR CONTAINS MATERIALS DETRIMENTAL TO HEALTH.

WARNING: BEFORE ROTATING THE PROPELLER BY HAND, ENSURE IGNITION SWITCH IS OFF AND THE THROTTLE IS CLOSED.

CAUTION: DO NOT ROTATE THE PROPELLER CLOCKWISE.

2. Checking Engine Oil

A. Oil Checking Procedure

(1) Turn the propeller several times by hand to transfer all the oil from the engine to the tank.

NOTE: The process is completed when air flows back to the oil tank. This flow of air can be perceived as gurgling sound when the cover of the tank is removed.

(2) Open oil access plate on upper cowling.
(3) Remove oil filler cap and withdraw dipstick.
(4) Wipe oil dipstick dry with a cloth.
(5) Reinsert dipstick.
(6) Withdraw dipstick and read oil level on dipstick.
(7) If necessary, refill engine oil with correct grade and viscosity (refer to 12-10-00).

NOTE: For normal engine operation maintain the oil level between the two marks as an excessive oil level will allow oil to escape via the venting line.
For longer flights replenish oil to max. mark to warrant more oil reserve.

(8) Reinsert oil dipstick, close filler cap, check for proper seating.
(9) Close oil access plate.

3. Oil Change Intervals

CAUTION: FOR ENGINE OPERATION WITH AVGAS, OIL SHOULD BE CHANGED EVERY 50 HOURS (REFER TO ROTAX AIRCRAFT ENGINES SI-912-016).

CAUTION: UNDER SEVERE OPERATING CONDITIONS, THE FREQUENCY OF OIL CHANGES MUST BE INCREASED REGARDLESS OF THE TYPE OF FUEL USED (MOGAS OR AVGAS).

A. Oil Change Intervals
(1) Under normal operating conditions, oil must be changed every 100 hours.
(2) For oil specifications, refer to 12-10-00 and to ROTAX Aircraft Engines SI-912-016, which contains further operating information for ROTAX engines.

4. Oil Changing

CAUTION: DRAINING THE OIL LINES AND OIL COOLER IS NOT NECESSARY AND MUST BE AVOIDED, AS IT RESULTS IN AIR ENTERING THE OIL SYSTEM. (REFER TO ROTAX AIRCRAFT ENGINES SI-912-018).

A. Oil Changing Procedure
(1) Run engine until operating temperature is reached.
(2) Shut down engine.

WARNING: HOT ENGINE COMPONENTS MAY CAUSE SKIN BURNS!

(3) Turn the propeller several times by hand to transfer all the oil from the engine to the tank.

NOTE: The process is completed when air flows back to the oil tank. This flow of air can be perceived as gurgling sound when the cover of the tank is removed.

(4) Remove engine cowling (refer to 71-10-00).
(5) Cut safety wire on drain screw at oil tank base. Remove drain screw.
(6) Drain oil and dispose of it as per environmental regulations.
(7) Remove oil filter from engine.
(8) Lubricate mating sealing ring of new oil filter with engine oil.
(9) Install new oil filter. Screw on new oil filter by hand.
(10) Cut oil filter out of its casing (without producing any metal chips) and inspect filter material.
(11) Renew gasket ring of drain screw on oil tank. Fit drain screw and tighten to 25 Nm (220 in.lbs). Secure drain screw with safety wire.
(12) Refill oil tank with approx. 3 liters (3.17 quarts) of oil. For oil specification, refer to 12-10-00 and to ROTAX Aircraft Engines SI-912-016.
(13) Reinsert oil dipstick, close filler cap, check for proper seating.
(14) Run engine until normal operating temperature is reached. Shut down engine.

WARNING: HOT ENGINE COMPONENTS MAY CAUSE SKIN BURNS!

(15) Check oil system for leaks.
(16) Tighten oil filter again by hand.
(17) Reinstall cowling (refer to 71-10-00).
(18) Document oil change as prescribed.

## INDUCTION AIR FILTER - SERVICING

1. General

A. The air filter in the air induction system keeps dust and dirt particles from entering the system. It is located in the air filter box on the left inside of the lower cowling.
To increase its effectiveness, the filter element should be treated with filter oil.

B. The condition of the air filter element will be determined primarily by engine operating conditions. Therefore, it should be regularly inspected, cleaned and replaced, if necessary, at least every 100 hours or once a year, whichever comes first.

2. Air Filter Changing

A. Air Filter Changing Procedure
(1) Remove upper cowling (refer to 71-10-00).
(2) Remove the cover of the air filter box.
(3) Remove air filter element from air filter box and replace by a new one.
(4) Install the cover of the air filter box.
(5) Reinstall cowling (refer to 71-10-00).

3. Air Filter Cleaning

A. Cleaning Procedures
(1) Remove air filter element as described above.
(2) Inspect air filter element for damage. If necessary renew filter element.

CAUTION: NEVER USE GASOLINE, STEAM, CAUSTIC LIQUIDS, DETERGENTS OR HIGH PRESSURE CLEANING.

(3) Lightly tap and brush off surface dirt.
(4) Spray filter cleaner on to entire element and let it soak for approx. 10 min.

WARNING: DO NOT DRY OVER NAKED FLAME OR WITH HOT AIR GUN. EXCESSIVE HEAT WILL SHRINK THE PORES OF THE FILTER MATERIAL RESTRICTING ENGINE AIR FLOW.

(5) Rinse filter element with water from the inside out and let it dry naturally.

CAUTION: NEVER USE GEAR OIL, DIESEL OIL OR MOTOR OIL AS THEY ATTRACT WATER.

(6) After cleaning, lubricate filter element evenly with filter oil spray or filter oil according to the manufacturer's instructions.
(7) Ensure air filter box is clean and free of debris.
(8) Install air filter as described above, pay attention to correct fit.

## COOLING SYSTEM - SERVICING

1. General

WARNING: NEVER OPEN PRESSURE CAP OR RADIATOR CAP WHEN THE COOLING SYSTEM IS HOT. FOR SAFETY REASONS, COVER CAP WITH A CLOTH AND OPEN SLOWLY. SUDDEN OPENING OF THE CAP COULD PROVOKE THE EXIT OF BOILING COOLANT AND RESULT IN SEVERE SCALDING.

A. The cooling system of the ROTAX 912 is designed for liquid cooling of the cylinder heads and ram air cooling of the cylinders. The cooling system of the cylinder heads is a closed circuit with an expansion tank. For a more detailed description and related maintenance procedures of the cooling system, refer to 75-00-00.

B. Coolant
There are two different cooling systems possible on the AQUILA AT01, each requiring a different coolant. The standard cooling system of the AQUILA AT01 (combined water / oil radiator) must only be operated with waterless coolant based on propylene glycol. If SB-AT01-029 has been carried out (installation of the AT01-100 cooling system with separate water and oil radiators) only conventional coolant based on ethylene glycol with 50% water content must be used.

Refer to the ROTAX Service Instruction SI-912-016, latest revision, for further information on suitable coolants. The maximum coolant quantity is 2,5 liters (2.6 U.S. quarts).

(1) Waterless coolant based on propylene glycol such as EVANS Aero Cool 180

NOTE: This type of coolant must be used on the standard AQUILA AT01 cooling system with a combined water / oil radiator.

CAUTION: WATER OR COOLANT CONTAINING WATER MUST NEVER BE ADDED TO THE COOLING SYSTEM! THE MAX. WATER CONTENT MUST NOT EXCEED 3,6%; IT CAN BE TESTED USING A BRIX REFRACTOMETER. ANY WATER PRESENT IN THE COOLING SYSTEM IS SEPARATED OUT AS VAPOR. THIS CAN CAUSE THE COOLING SYSTEM TO FAIL DUE TO INSUFFICIENT COOLANT QUANTITY.

USE COOLANT IN ACCORDANCE WITH MANUFACTURER'S INSTRUCTIONS.

NOTE: If EVANS Aero Cool 180 is not available locally for servicing the cooling system, a conventional coolant based on pure 100% ethylene glycol can be used temporarily. However, the coolant must be replaced again with EVANS Aero Cool 180 within the next 15 days. Only add 100% pure ethylene glycol!

(2) Conventional coolant based on ethylene glycol such as BASF Glysantin Protect Plus / G48 50% antifreeze concentrate with additives against corrosion and 50 % pure water, or use of an equivalent premixed coolant. The coolant must be renewed every three years.

NOTE: This type of coolant must be used if SB-AT01-029 has been carried out and the standard AQUILA AT01 cooling system has been replaced by the AT01-100 cooling system with separate water and oil radiators.

CAUTION: ENSURE THAT ONLY ANTIFREEZE CONCENTRATE CONTAINING ADDITIVES AGAINST CORROSION FOR LIGHT METAL ENGINES IS USED. USE ANTIFREEZE CONCENTRATE IN ACCORDANCE WITH MANUFACTURER'S INSTRUCTIONS.

2. Adding Coolant

A. Prior to adding coolant, the reason for the loss of the liquid must be investigated and corrected.

B. Servicing Procedure
(1) Remove engine cowling (refer to 71-10-00).
(2) When engine is cold, open pressure cap of the expansion tank and fill up the expansion tank completely.
(3) Run engine to operating temperature and allow engine to cool down before checking coolant level again. Replenish as necessary.
(4) Close pressure cap, check the condition of the rubber sealing rings.
(5) Install engine cowling (refer to 71-10-00).

3. Renewal of the Coolant

A. Servicing Procedure
(1) When engine is cold, open pressure cap of the expansion tank and lowest coolant hose on the radiator and drain the coolant.
(2) Reconnect coolant hose.
(3) Refill freshly mixed coolant into expansion tank (highest point of the cooling system).
(4) Install radiator tester and apply air pressure of 2 bar (30 psi). After 30 minutes there should be no noticeable pressure drop.
(5) Reinstall pressure cap of the expansion tank.
(6) Run engine to operating temperature and allow engine to cool down. Check system for leaks. Check coolant level and replenish as necessary.

4. Flushing the Cooling System (conventional coolant only!)

A. Servicing Procedure
(1) When engine is cold, open pressure cap of the expansion tank and lowest coolant hose on the radiator and drain the coolant.
(2) Flush system with a water hose at a max. pressure of 2 bar (30 psi).
(3) Reconnect coolant hose.
(4) Refill freshly mixed coolant into expansion tank (highest point of the cooling system).
(5) Install radiator tester and apply air pressure of 2 bar (30 psi). After 30 minutes there should be no noticeable pressure drop.
(6) Reinstall pressure cap of the expansion tank.
(7) Run engine to operating temperature and allow engine to cool down. Check system for leaks. Check coolant level and replenish as necessary.

## BRAKE SYSTEM - SERVICING

1. General

   A. Ground service for the brake system is limited to the replenishment of brake fluid. The brake fluid reservoir is located at the upper left firewall in the engine compartment.

   B. Refer to 32-40-00 for brake system bleeding / brake fluid change procedures.

2. Replenishing Hydraulic Fluid

   A. Hydraulic Fluid Replenishing

   CAUTION: ONLY USE HYDRAULIC FLUID WHICH CONFORMS TO MIL-H-5606 SPECIFICATION.

   (1) Remove upper cowling (refer to 71-10-00).
   (2) Remove filler plug from hydraulic fluid reservoir.

   CAUTION: REMOVE EXCESSIVE HYDRAULIC FLUID IMMEDIATELY FROM PAINT SURFACES TO PREVENT CHEMICAL ATTACK.

   (3) Refill hydraulic fluid.
   (4) Install filler plug.
   (5) Install upper cowling (refer to 71-10-00).

## TIRES - SERVICING

1. General

A. The landing gear is equipped with 5.00-5 tires. Required tire pressure is:

(a) Main gear tire: 2,5 bar (36 psi)
(b) Nose gear tire: 2,0 bar (29 psi)

Checking tire pressure regularly is the most important preventive measure in tire service. Improper tire pressure causes deterioration in the ground handling behavior of the aircraft and reduces the service life of the tire.
Under-pressure is indicated by excessive wear in the tire shoulder area, over-pressure by excessive wear in the center of tire.

2. Tire Servicing

WARNING: WHILE SERVICING, DO NOT STAND IN FRONT OF EITHER BEAD AREA OF THE TIRE BECAUSE BURSTING TIRES HAVE THE TENDENCY TO RUPTURE ALONG THE BEAD. ALWAYS STAND AT A 90° ANGLE TO THE AXLE ALONG THE TIRE CENTERLINE.

A. Service Notes
(1) If possible, do not expose the tires permanently to intensive solar radiation.
(2) Ensure tire pressure gauges used are accurate.
(3) While checking tire pressure, the aircraft should be on level ground and the tire cold.
(4) A freshly mounted and installed tube-type tire should be closely monitored during the first hours of operation. Air trapped between the tire and the tube at the time of mounting could seep out, resulting in under pressure in the tire.

B. Tire servicing comprises the following items:
(1) Check tire pressure regularly. If necessary inflate or drain air.
(2) Examine tires for wear, cuts, bruises, and foreign bodies in the tread.
(3) Check proper location of the red slide marks.
(4) Always remove oil, grease and mud from tires with soap and water.

## BATTERY - SERVICING

1. General

   A. The battery should be serviced every 100 hours. In the case of heavy-duty operation or operation in cold regions, service intervals should be shorter.

   B. For installation/removal procedures and a capacity check of the battery, refer to 24-30-00.

2. Battery Servicing

   NOTE: The battery should be serviced only after it has been removed from the aircraft.

   A. Battery servicing involves the following:
      (1) Check battery and battery tray for any corrosion and dirt. Clean with clear water and dry.
      (2) Check battery charging using a battery tester. Recharge battery if required.
      (3) Clean and grease battery terminals (refer to 12-22-00).
      (4) If existent, test ventilation tube for condition and obstructions.

## SCHEDULED SERVICING - DESCRIPTION

1. General

A. This section provides instructions necessary to carry out scheduled servicing, such as the periodic lubrication of aircraft components; external and internal cleaning. Service intervals are also provided. This section does not include lubrication procedures required to complete maintenance measures.

# LUBRICANTS - DESCRIPTION

1. General

   A. This section assists with the selection of proper lubricants used to maintain the aircraft.
   To ensure a long service life of the lubricated components, it is recommended to always use pure and authorized lubricants.

2. Service Notes

   A. Use of the lubricants
      (1) Cleanliness is essential to good lubrication. Lubricants and required equipment must be kept clean.
      (2) Store the lubricants in a secure place and in accordance with the manufacturer's specifications.
      (3) Wipe grease fittings and areas to be lubricated with clean dry cloths before lubricating.
      (4) When lubricating bearings which are vented, force grease into fitting until old grease is expelled. Remove old grease.
      (5) Control cables should not be lubricated, unless to prevent corrosion.

3. Definition of "As Needed"

   A. In the following sections, time requirements for lubrication are shown either by a specific time interval or by „as needed“. The latter means that no interval is determined for this item. The mechanic decides when lubrication is required.

   B. If one or several of the following conditions occurs simultaneously, the component must be lubricated:
      (1) The old lubricant has been removed.
      (2) Dirt or wear residue are visible near the movement contact area.
      (3) While moving squeaks, grinding or other abnormal sounds are audible.
      (4) During movement by the hand, jerky or restricted movement occurs throughout portions of travel range.

4. Recommended Lubricants:

A. Categories of lubricants, their specifications and typical areas of application are provided below.

| Abbreviation | Specification | Description |
|---|---|---|
| GR | MIL-PRF-81322 | Grease, wide temperature range |
| GH | MIL-PRF-23827 | Grease, aircraft and instrument,<br>Gear and actuator screw |
| OG | MIL-L-7870 | Oil, general purpose |
| PL | VV-P-236 | Technical petrolatum |
| PG | SS-G-659 | Powdered graphite |
| GL | MIL-G-21164 | Grease, molybdenum disulfide, for high and low temperatures |
| OL | VV-L-800 | Light oil |
| SG | MIL-S-8660 or<br>SAE AS 8660 | Thick silicone grease (-50°C to 200°C),<br>(liquid grease in spray is not allowed) |
| CP | MIL-C81309E<br>Type II & III | Corrosion preventive compound<br>(corrosion protection of metal parts) |

B. Recommended Lubricants

| Abbrevation | Product | Manufacturer |
|---|---|---|
| GR | AeroShell Grease 22 | Shell Oil Company |
| GL | AeroShell Grease 64 | Shell Oil Company |
| PL | Royco 1<br>DC 4 | Royal Lubricants Co. Inc.<br>Dow Corning |

## LUBRICATION - SERVICING

1. General

   A. This section contains information on lubrication intervals for components or parts.

2. Lubrication Chart

   A. Figure 201 shows the location of components or parts to be regularly lubricated. The following chart contains detailed information about the lubrication interval, the recommended lubricant and the dispensing equipment.

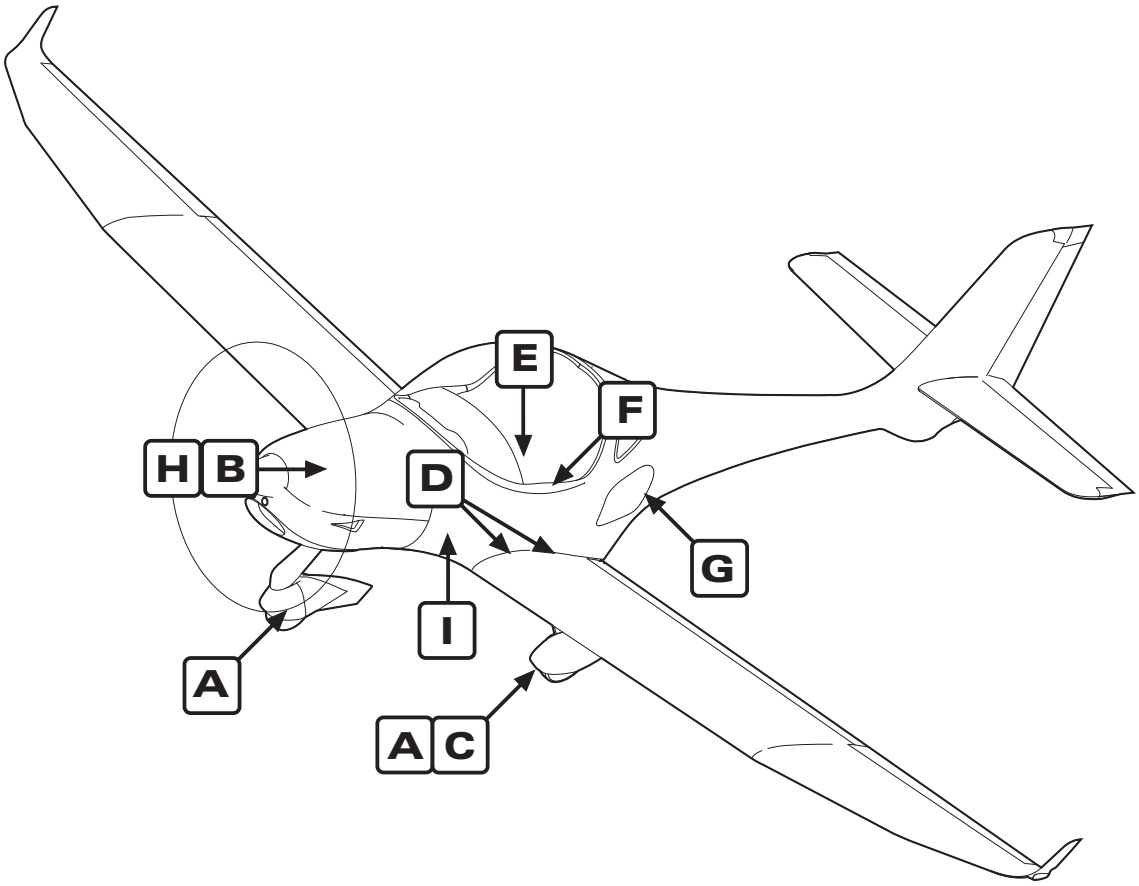


Lubrication Chart
Figure 301 (1)

| INDEX | ZONE | ACCESS PLATE | ITEM | LUBE TYPE (APPL.) | INTERVAL |
|---|---|---|---|---|---|
| A | 721, 722<br>720 | | Main wheel bearings<br>Nose wheel bearings | GR (Hand) | 500 h or<br>annual |
| B | 120 | | Battery terminals | PL (Hand) | 100 h |
| C | 721<br>722 | | Brake anchor bolts | SG | annual or<br>on assembly |
| D | 510<br>610 | | Wing attachment bolts | GL (Hand) or<br>GR[1)] (Hand) | 500 h / 5 years or<br>on assembly |
| E | 211 | | Seat tracks | Grease | annual |
| F | 211 | | Canopy lock assembly | GR (Hand) | annual |
| G | 211 | | Cargo door lock | GR (Hand) | as needed |
| H | 120 | | Carburetor throttle shaft<br>Engine / propeller control cables | Eng. oil (Oil can)<br>OL, OG or Eng. oil | 100 h<br>on assembly |
| I | 211 | | Rudder pedal bearing | GR (Hand) | annual |

[1)] If this type of lubricant is used the lubrication interval is reduced to annual.

Lubrication Chart
Figure 301 (2)

## AIRCRAFT EXTERIOR - CLEANING AND CARE

1. General

A. The good flight performance of the aircraft is achieved due to the modern construction and the use of specific materials. For efficient laminar flow, a clean surface is very important. Therefore, one should always keep the entire aircraft clean, but especially the leading edges of the wing.

B. Information on preventive and protection measures, such as waxing specific surfaces, is also given.

2. Safety Precautions

A. Read and adhere to all manufacturer's instructions, warnings and cautions on cleaning/solvent compounds used.
B. Do not use silicone-based wax to polish the aircraft exterior.
C. Do not clean the aircraft at ambient temperatures close to 0°C with water.
D. Cover all lubricated parts during any cleaning process.
E. During the application of cleaners containing solvents (e.g. cleaning the engine), the other surfaces must be covered carefully or otherwise protected.

3. Cleaning and Care of the Canopy

CAUTION: NEVER USE GASOLINE, BENZENE, ALCOHOL, ACETONE, CARBON TETRACHLORIDE, LACQUER THINNER OR GLASS CLEANER. THESE MATERIALS WILL SOFTEN THE PLASTIC AND MAY CAUSE IT TO CRAZE.

CAUTION: DO NOT USE CLEANERS WITH CHEMICAL SUPPLEMENTS WHOSE EFFECT ON THE ACRYLIC SURFACE IS UNKNOWN.

A. Cleaning Canopy
(1) Park the aircraft in a hangar or in the shadows, avoid places with a lot of dust caused by wind or vehicles.
(2) To prevent scratches, wash the canopy carefully with plenty of mild soap and water, using the palm of the hand to feel and dislodge dirt and mud. A soft cloth, chamois leather or sponge should be used.
(3) Rinse thoroughly and then dry with a clean moist chamois.

B. Care of the Canopy
(1) As a protection from mechanical and chemical actions and to cover slight cuts in the canopy, a polish or a wax for acrylic glass can be applied in accordance with the manufacturer's specifications.

NOTE: Clean surfaces before applying polish or wax.

4. Cleaning and Care of the Aircraft Exterior Surfaces

A. Procedure for cleaning the exterior surface of the aircraft
(1) Park the aircraft in a hangar or in the shadows, avoid places with a lot of dust caused by wind or vehicles.
(2) Close the canopy, close access / inspection doors.

CAUTION KEEP WATER AWAY FROM PITOT AND STATIC PORTS AND ELECTRICAL AND AVIONIC EQUIPMENT.

(3) Flush away loose dirt with water.

CAUTION: DO NOT USE HARSH ABRASIVES, ALKALINE SOAPS OR DETERGENTS.

DO NOT USE CLEANING OR POLISHING AGENTS WHICH CONTAIN SILICONE.

(4) Using a soft cleaning cloth or a sponge, wash with a mild, non-alkaline soap and water solution.
(5) Rinse thoroughly with clean water and then dry with a soft cloth or chamois.

B. Care of the Aircraft Exterior Surface
(1) To protect against corrosion, mechanical and chemical actions during operation, the exterior surfaces can be waxed with a good polish or aircraft wax in accordance with the manufacturer's instructions.

NOTE: Clean aircraft exterior before applying polish or wax.

(2) After using cleaners containing any solvent or chemical, the relevant surfaces should always be waxed.
(3) If the aircraft is operated in a coastal or other salt-water environment, it must be washed and waxed more frequently.
(4) A heavier wax layer on the leading edges of the wings and tail and on the cowl nose and propeller spinner will reduce abrasion in these areas.

5. Cleaning and Care of Navigation / Position / Anti-Collision Lights

A. Lights can be polished with a good wax and/or a liquid polishing compound. Refresh polish and hand buff once or twice a month.

B. After using a polishing compound, the lights should be waxed.

CAUTION: UNDER NO CIRCUMSTANCES USE ANY PETROLEUM BASED PRODUCT TO CLEAN THE LIGHTS.

6. Cleaning the Engine

A. Safety and Maintenance Precautions
(1) The engine should be cleaned during every 100-hour inspection.
(2) Handle chemical cleaners and solvents with caution. Always read the manufacturer's instruction and follow them carefully.
(3) Cleaning should be performed in the open air or in a well ventilated hangar.
(4) Suitable fire fighting and safety equipment should be available.
(5) If compressed air is used to apply solvents or to dry components, the lowest practical pressure level should be used.

B. Engine Cleaning Procedures

WARNING: DO NOT SMOKE OR EXPOSE A FLAME WITHIN 100 FEET OF THE CLEANING AREA.

(1) Remove cowling (refer to 71-10-00).

WARNING: DO NOT USE GASOLINE OR OTHER HIGHLY FLAMMABLE SUBSTANCES.

DO NOT ATTEMPT TO WASH AN ENGINE WHEN IT IS STILL HOT OR RUNNING.

CAUTION: DO NOT DIRECT CLEANING SOLVENTS OR WATER STREAMS AT OPENINGS OF THE ALTERNATOR OR THE STARTER.

(2) Carefully cover the openings of the alternator and the starter.
(3) If the engine is contaminated with salt or corrosive chemicals, first flush engine compartment with water.
(4) Apply a suitable solvent or cleaning agent to the engine compartment in accordance with the manufacturer's instructions.
(5) Leave the solvent on the engine for approx. ten minutes.

CAUTION: CLEANING AGENTS SHOULD NEVER BE LEFT IN ENGINE COMPARTMENT. CLEANER OR SOLVENT RESIDUE MAY CAUSE DAMAGE TO COMPONENTS SUCH AS NEOPRENE SEALS AND SILICONE FIRE SLEEVES.

(6) Rinse thoroughly with clean warm water.
(7) Allow engine to dry or dry it using compressed air.
(8) Remove all protection coverings.
(9) Re-lubricate all control arms and moving parts as required.
(10) Reinstall cowling (refer to 71-10-00).

WARNING: DO NOT OPERATE THE ENGINE UNTIL EXCESS SOLVENT HAS EVAPORATED OR OTHERWISE BEEN REMOVED.

BEFORE ROTATING THE PROPELLER BY HAND, ENSURE IGNITION SWITCH IS OFF AND THE THROTTLE IS CLOSED.

CAUTION: DO NOT ROTATE THE PROPELLER CLOCKWISE.

(11) Before starting the engine, rotate the propeller by hand no less than five complete revolutions.

7. Cleaning and Care of the Propeller

A. Clean propeller if necessary with any car wash solution or equivalent. This should be done at least every 50 hours.
Remove grease and dirt with a commercial detergent, which is suitable for polyurethane-lacquers.

CAUTION: IT IS IMPORTANT TO AVOID MOISTURE PENETRATING INTO THE WOODEN CORE.

Small scratches and nicks should be dealt with during routine maintenance applying a coating of water-resistant varnish, preferably Polyurethane.
Replace damaged or missing PU strips on the propeller leading edge as soon as possible.

8. Cleaning the Landing Gear

A. The landing gear struts and wheel fairings should be washed with clear water or with a mild detergent and water.

B. Wheels, axles, spacers and brake parts are protected from corrosion with an anodizing coating. This thin coating does not protect against basic agent with pH > 9.

CAUTION: CLEANING THE WHEEL AND BRAKE PARTS WITH BASIC AGENT MAY REMOVE TOTALLY THE ANODIZING COATING. ACID AGENT MAY ALSO ATTACK THE ANODIZING.

Wheel and brake parts should be cleaned using water and soap or dry clothes only.

C. After cleaning, the tires can be treated with standard tire protection.

D. Protect the disc and pads from brake fluid contamination. Brake pads are porous and cannot be cleaned if contaminated by brake fluid, they must be replaced by new ones. Clean the disc separately from the brake calipers, using thinner directly on the brake caliper may cause damage to the seals.

## AIRCRAFT INTERIOR - CLEANING AND CARE

1. General

   A. This section provides the information required to clean the aircraft interior properly. Several recommended types of cleaning agents for different materials and the relevant cleaning and care procedures are also described below.

2. Aircraft Interior Cleaning

   A. Interior panels such as sidewalls, door panels etc. may be cleaned using a mild detergent solution. Stubborn deposits may be removed using a suitable material cleaner in accordance with manufacturer's instructions. If in doubt, apply a small amount of cleaner to a small unobtrusive part and test it for reaction.

3. Cleaning the Instrument Panel

   A. The instrument panel, center pedestal and instruments/displays can be cleaned with a soft cotton cloth dampened with clean water. Ensure that the ALT1/BAT switch is in OFF position. Switch on the electrical systems and components of the aircraft only after the instrument panel has dried completely.

   CAUTION: DO NOT USE ANY CHEMICAL CLEANING AGENTS. CARE SHOULD BE TAKEN TO AVOID SCRATCHING THE SURFACE OF DISPLAYS.

4. Cleaning the Cabin Floor

   A. The floor area, the area under the seats and the baggage compartment should be cleaned regularly with a vacuum.

   B. The carpet is made of high-quality, dirt repellant material and usually requires only a minimum of maintenance. If it becomes soiled, a standard carpet cleaner can be used.

5. Cleaning the Seats

   A. Seat upholstery is made of a dirt repellant, hardwearing material. They should, however, be cleaned regularly to keep them in good condition. The following recommendations should be followed.

   B. To remove dust and loose dirt from the seats, first clean with a vacuum.

   For cleaning and care use a foam type detergent, such as is available for car seats. Follow the manufacturer’s instructions.

C. Blot up any liquid spilled promptly with an absorbent tissue or cloth. Press the blotting material firmly against the upholstery and hold for several seconds. Continue blotting until no more liquid is absorbed.

Scrape off sticky materials cautiously with a dull knife, then clean area as required.

Oil spots may be removed with household spot removers. Before using, read the instructions, test it on an obscure place on the seat and use it sparingly.

## UNSCHEDULED SERVICING

1. General

A. This section contains those instructions necessary to carry out unscheduled servicing for example: removing ice and snow from a parked aircraft.

2. Removing Snow and Ice

CAUTION: DO NOT REMOVE SNOW AND ICE FROM SURFACES USING SHARP-EDGED INSTRUMENTS.

NEVER USE DE-ICING FLUIDS TO REMOVE SNOW OR ICE DEPOSITS FROM AIRCRAFT SURFACES.
HEATED DE-ICING FLUIDS CAN DAMAGE COMPOSITE STRUCTURES DUE TO EXTREME TEMPERATURE CHANGE. SOME DE-ICING FLUIDS MAY ALSO DAMAGE THE ACRYLIC GLASS OF THE CANOPY.

A. After snowfall, the snow should be removed immediately from the surface of the aircraft to prevent it from refreezing on the surface and/or in slits and gaps after it has started to thaw.

B. Procedure
(1) Remove loose snow from the wing surface with a broom, working outwards from the wing root.

NOTE: The areas between wings and ailerons and stabilizers and rudders must be treated particularly carefully.

CAUTION: DO NOT DAMAGE THE ANTENNAE.

(2) Free canopy of snow.
(3) Remove snow from cowling, fuselage and empennage.

C. In the case of ice, it is recommended to defrost the aircraft in a heated hangar. Allow all aircraft surfaces to completely dry prior to flight to prevent control surfaces from freezing.

# CHAPTER 20

# STANDARD PRACTICES - AIRFRAME

## TABLE OF CONTENTS


| Title | Chapter Section Subject | Page |
|---|---|---|
| STANDARD PRACTICES AIRFRAME - GENERAL | 20-00-00 | 1 |
| Introduction | 20-00-00 | 1 |
| General Description | 20-00-00 | 1 |
| FASTENER IDENTIFICATION AND TORQUE DATA | 20-10-00 | 1 |
| General | 20-10-00 | 1 |
| Bolt Types | 20-10-00 | 1 |
| Torques | 20-10-00 | 2 |
| CONVERSION DATA | 20-11-00 | 1 |
| General | 20-11-00 | 1 |
| Conversion Factors | 20-11-00 | 1 |
| Equivalents for Standard Values | 20-11-00 | 3 |

# STANDARD PRACTICES AIRFRAME - GENERAL

1. Introduction

   A. This chapter describes standard maintenance practices applicable to the entire airframe and related systems. Maintenance procedures which are unique to a specific system / component / part are described in the corresponding chapter.

   B. As far as the maintenance of the AQUILA AT01 is concerned, there are no standard practices or relevant safety regulations, which require special knowledge other than that which is commonly expected for the maintenance of small aircraft. Therefore, this chapter should serve basically as a source for conversion data.

2. General Description

   Below a brief description and intended purpose of each section of this chapter is given.

   A. Section 20-00-00 - Standard Practices Airframe - General. This section provides a general overview of content and purpose of the chapter.

   B. Section 20-10-00 - Conversion Data. This section provides various formulae for converting metric, Imperial and US measurements.

## FASTENER IDENTIFICATION AND TORQUE DATA

1. General

A. This section contains information concerning the identification of bolts, the correct usage of bolts and nuts and torque data.

CAUTION: OBSERVE STANDARD OR TORQUE VALUES RECOMMENDED BY THE MANUFACTURER AND MAKE SURE THE RECOMMENDED SAFETYING DEVICE FOR EVERY FASTENER IS APPLIED.

2. Bolt Types

A. The bolts used fulfill AN, MS, LN and DIN specifications. They can be identified by code marking(s) on the bolt heads. These markings generally denote the material of which the bolt is made, whether the bolt is a standard type or a special purpose bolt and sometimes include the manufacturer.

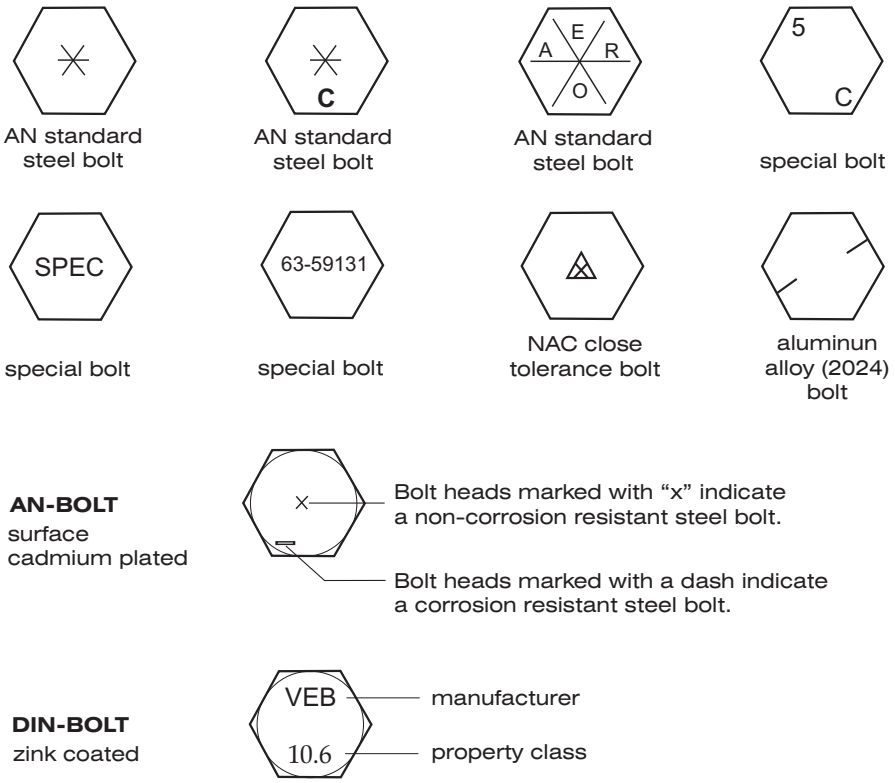


Typical Aircraft Bolt Markings
Figure 1

3. Torques

NOTE: When a specific torque is not provided in the maintenance instructions contained in this maintenance manual, use the standard torque patterns shown in table 201 respectively the special torques in table 202.

A. A correct torque application is very important. Undertorque can result in unnecessary wear of nuts and bolts, as well as the parts they secure. Overtorque can cause failure of a bolt or nut due to the overstressing of the threaded areas. Uneven or additional loads that are applied to the assembly may result in wear or premature failure. To ensure that correct torque is applied, observe the following:

(1) Be sure that the torque applied is for the size of the bolt shank and not the wrench size.

(2) Calibrate the torque wrench at least once a year, or immediately after it has been misused or dropped, to ensure continued accuracy.

(3) Be sure that bolt and nut threads are clean and dry, unless otherwise specified by the manufacturer.

(4) Run the nut down to near contact with the washer or bearing surface and check the friction drag torque required to turn the nut. Whenever possible, apply the torque to the nut and not the bolt. This will reduce rotation of the bolt in the hole and reduce wear.

(5) Add the friction drag torque to the desired torque. This is referred to as "final torque," which should register on the indicator or setting for a snap-over type torque wrench.

(6) Apply a smooth even pull when applying torque pressure. If rattling or a jerking motion occurs during final torque, turn back the nut and retorque.

(7) Many uses of bolts in aircraft/engines require stretch checks prior to reuse. This requirement is due primarily to bolt stretching caused by overtorquing.

(8) When installing a castle nut, start alignment with the cotter pin hole at the minimum recommended torque plus friction drag torque.

(9) Do not exceed the maximum torque plus the friction drag. If the hole and nut castellation do not align, change washer or nut and try again. Exceeding the maximum recommended torque is not recommended.

(10) When torque is applied to bolt heads or cap screws, apply the recommended torque plus friction drag torque.

(11) If special adapters are used which will change the effective length of the torque wrench, the final torque indication or wrench setting must be adjusted accordingly. Determine the torque wrench indication or setting with adapter installed as shown in figure 2.

B. Table 201/202 shows the recommended torque to be used when the manufacturer does not supply a specific torque for maintenance procedures.

Table 201: Standard Torques

| | DIN and LN specifications | |
|---|---|---|
| Thread size | Torque values Nm | Torque values in.lbs |
| M4 | 1.8 | 15.9 |
| M5 | 3.6 | 31.9 |
| M6 | 6.4 | 56.6 |
| M8 | 16 | 141.6 |
| M10 | 32 | 283.2 |
| M12 | 60 | 531.1 |

NOTE: Castellated nuts (DIN 935, 937) should be finger tightened.

Table 202: Special Torques[1)]

| Part | Torque (Nm / in.lbs) | Remarks |
|---|---|---|
| Bolts attaching inertia reel retractor of shoulder harness to fuselage structure | 4 / 35 | |
| Bolts attaching lap belts to fuselage structure | 8 / 71 | |
| Bolts attaching engine to ROTAX engine mount | 40 / 354 | |
| Oil drain screw | 25 / 221 | |
| Old spark plugs (P/N 297940)<br>New spark plugs (P/N 297656) | 20 / 177<br>16 / 142 | refer to Rotax SI-912-027 |
| Main gear spring leaf attachment bolts to inner bracket | 45 / 398 | |
| Fuel drainer | - - | tighten until the outer o-ring is snug against the mating surface |
| Bolt attaching nose gear leg to support brace | 28 / 248 | |
| Bolts attaching main gear wheel axle to landing gear leg | 28 / 248 | |

1) Refer to the appropriate ROTAX publications for engine parts.

**1. Variant - The adapter increases the effective length of the torque wrench.**

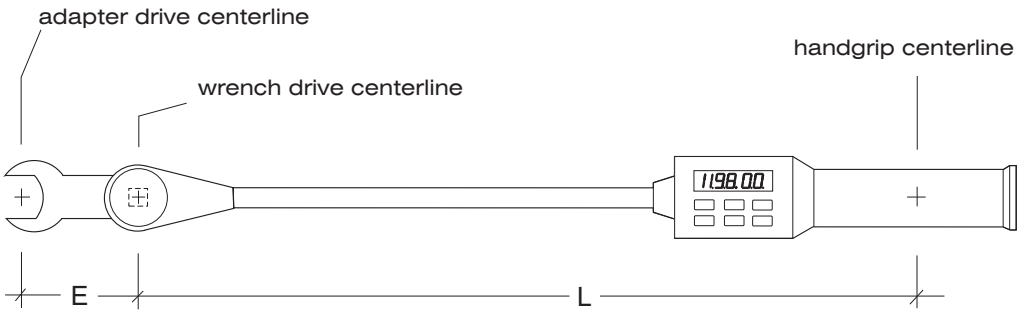


Y = apparent (indicated) torque
T = actual (desired) torque
L = effective length lever
E = effective length of extension

formula: $\frac{T \times L}{L + E} = Y$

example:
T = 14 Nm
L = 30 cm
Y = ?
E = 8 cm

$Y = \frac{14\ Nm \times 0{,}3\ m}{0{,}3\ m + 0{,}08\ m} = \frac{4{,}2\ Nm}{0{,}38} = 11{,}05\ Nm$

**2. Variant - The adapter decreases the effective length of the torque wrench.**

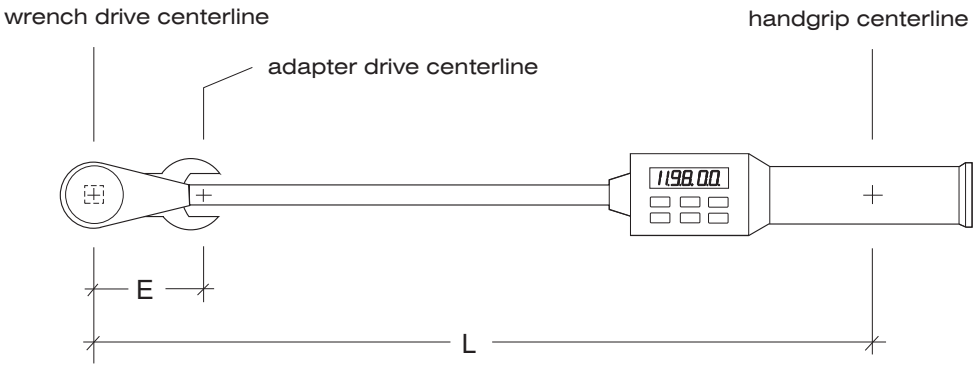


formula: $\frac{T \times L}{L - E} = Y$

example:
T = 14 Nm
L = 30 cm
Y = ?
E = 8 cm

$Y = \frac{14\ Nm \times 0{,}3\ m}{0{,}3\ m - 0{,}08\ m} = \frac{4{,}2\ Nm}{0{,}22} = 19{,}09\ Nm$

Torque Wrench with Adapters
Figure 2

# CONVERSION DATA

1. General

A. This chapter is designed to assist the operator with the conversion of commonly used measuring units found in this manual from Imperial, US and metric measuring systems.

2. Conversion Factors

A. Subsequent conversion factors of units of measurement are given from the metric system to the US / Imperial systems and vice versa.

(1) Distance and length

Table 1 - Conversion of Distances and Lengths

| Unit: | m | in. | ft. | yd |
|---|---|---|---|---|
| 1 meter; m | 1 | 39,37 | 3,281 | 1,09 |
| 1 inch; in. (") | 0,0254 | 1 | 0,083 | 0,02 |
| 1 foot; ft. (') | 0,3048 | 12 | 1 | 0,33 |
| 1 yard; yd. | 0,914 | 36 | 3 | 1 |

statute mile = 1.609 kilometers, nautical mile=1.852 kilometers

(2) Square measures

Table 2 - Conversion of Square Measures

| Unit | cm² | m² | Sq. in. | Sq. ft. | Sq. yd. |
|---|---|---|---|---|---|
| 1 cm² | 1 | 0,0001 | 0,155 | 0,00108 | 0,0001196 |
| 1 m² | 10000 | 1 | 1550 | 10,764 | 1,196 |
| 1 sq. in. | 6,452 | 0,00064516 | 1 | 0,006944 | 0,0007716 |
| 1 sq. ft. | 929 | 0,092903 | 144 | 1 | 0,111111 |
| 1 sq. yd. | 8361 | 0,836127 | 1296 | 9 | 1 |

(3) Cubic measures

Table 3 - Conversion of Cubic Measures

| Unit | l | m³ | Cu. in. | Cu. ft. | Imp.-Gallons | U.S.-Gallons |
|---|---|---|---|---|---|---|
| 1 Liter | 1 | 0,001 | 61,03 | 0,05332 | 0,22 | 0,2642 |
| 1 m³ | 1000 | 1 | 61023 | 35,315 | 219,97 | 264,175 |
| 1 cu. in. | 0,01639 | 0,00001639 | 1 | 0,0005787 | 0,003601 | 0,004329 |
| 1 cu. ft. | 28,32 | 0,028317 | 1728 | 1 | 6,228783 | 7,480519 |
| 1 Imp.-Gallon | 4,546 | 0,004546 | 277,4 | 0,160545 | 1 | 1,20096 |
| 1 U.S.-Gallon* | 3,785 | 0,003785 | 231 | 0,133183 | 0,832667 | 1 |
| 1 U.S.-Quart | 0,9463 | | | | | 4 |

*= liquid

(4) Surface loads

| | | | | |
|---|---|---|---|---|
| 1 pound by square inch | = 1 psi | = 1 lb/in.² | = 0,0703 kp/cm² | = 0,6896 N/cm² |
| 1 kilopound by square inch | = 1 kipsi | = 1 kip/in.² | = 70,3100 kp/cm² | = 689,7411 N/cm² |
| 1 AT | = 14,7 lbs./in.² | = 1,0335 kp/cm² | = 10,1386 N/cm² | |

(5) Weights

| | | | |
|---|---|---|---|
| 1 ounce | = 1 octane number | | = 28,3495g |
| 1 pound | = 1 lb. | = 16 octane numbers | = 453,5920g |

(6) Moments

| | | | | |
|---|---|---|---|---|
| 1 pound inch | | = 1 in.lbs | = 0,01152 kpm | = 0,11301 Nm |
| 1 pound foot | = 1 lb.ft. | = 12 in.lbs | = 0,13825 kpm | = 1,35623 Nm |

(7) Temperature

1. Temp. Centigrade = 5/9 (Temp. Fahrenheit -32)
2. Temp. Fahrenheit = 9/5 (Temp. Centigrade +32)

3. Equivalents for Standard Values

A. For conversion data to convert standard drill sizes to inch and millimeter equivalents refer to figure 1.

| mm | Drill | in. | mm | Drill | in. | mm | Drill | in. |
|---|---|---|---|---|---|---|---|---|
| 0,34 | 80 | 0,0135 | 1,85 | 49 | 0,0730 | 4,09 | 20 | 0,1610 |
| 0,37 | 79 | 0,0145 | 1,93 | 48 | 0,0760 | 4,22 | 19 | 0,1660 |
| 0,40 | 1/64 | 0,0156 | 1,98 | 5/64 | 0,0781 | 4,31 | 18 | 0,1695 |
| 0,41 | 78 | 0,0160 | 1,99 | 47 | 0,0785 | 4,37 | 11/64 | 0,1719 |
| 0,46 | 77 | 0,0180 | 2,06 | 46 | 0,0810 | 4,39 | 17 | 0,1730 |
| | - - | - - | | | | | - - | - - |
| 0,51 | 76 | 0,0200 | 2,08 | 45 | 0,0820 | 4,50 | 16 | 0,1770 |
| 0,53 | 75 | 0,0210 | 2,18 | 44 | 0,0860 | 4,57 | 15 | 0,1800 |
| 0,57 | 74 | 0,0225 | 2,26 | 43 | 0,0890 | 4,62 | 14 | 0,1820 |
| 0,61 | 73 | 0,0240 | 2,37 | 42 | 0,0935 | 4,70 | 13 | 0,1850 |
| 0,64 | 72 | 0,0250 | 2,38 | 3/32 | 0,0937 | 4,76 | 3/16 | 0,1875 |
| | - - | - - | | - - | - - | | | |
| 0,66 | 71 | 0,0260 | 2,44 | 41 | 0,0960 | 4,80 | 12 | 0,1890 |
| 0,71 | 70 | 0,0280 | 2,49 | 40 | 0,0980 | 4,85 | 11 | 0,1910 |
| 0,74 | 69 | 0,0292 | 2,53 | 39 | 0,0995 | 4,91 | 10 | 0,1935 |
| 0,79 | 68 | 0,0310 | 2,58 | 38 | 0,1015 | 4,98 | 9 | 0,1960 |
| 0,80 | 1/32 | 0,0313 | 2,64 | 37 | 0,1040 | 5,05 | 8 | 0,1990 |
| | - - | - - | | - - | - - | | - - | - - |
| 0,81 | 67 | 0,0320 | 2,71 | 36 | 0,1065 | 5,11 | 7 | 0,2010 |
| 0,84 | 66 | 0,0330 | 2,78 | 7/64 | 0,1093 | 5,16 | 13/64 | 0,2031 |
| 0,89 | 65 | 0,0350 | 2,79 | 35 | 0,1100 | 5,18 | 6 | 0,2040 |
| 0,91 | 64 | 0,0360 | 2,82 | 34 | 0,1110 | 5,22 | 5 | 0,2055 |
| 0,94 | 63 | 0,0370 | 2,87 | 33 | 0,1130 | 5,31 | 4 | 0,2090 |
| | - - | - - | | - - | - - | | - - | - - |
| 0,97 | 62 | 0,0380 | 2,95 | 32 | 0,1160 | 5,41 | 3 | 0,2130 |
| 0,99 | 61 | 0,0390 | 3,05 | 31 | 0,1200 | 5,55 | 7/32 | 0,2187 |
| 1,02 | 60 | 0,0400 | 3,18 | 1/8 | 0,1250 | 5,61 | 2 | 0,2210 |
| 1,04 | 59 | 0,0410 | 3,26 | 30 | 0,1285 | 5,79 | 1 | 0,2280 |
| 1,07 | 58 | 0,0420 | 3,45 | 29 | 0,1360 | 5,94 | A | 0,2340 |
| | - - | - - | | - - | - - | | - - | - - |
| 1,09 | 57 | 0,0430 | 3,57 | 28 | 0,1405 | 5,95 | 15/64 | 0,2344 |
| 1,18 | 56 | 0,0465 | 3,57 | 9/64 | 0,1406 | 6,05 | B | 0,2380 |
| 1,19 | 3/64 | 0,0469 | 3,66 | 27 | 0,1440 | 6,15 | C | 0,2420 |
| 1,32 | 55 | 0,0520 | 3,73 | 26 | 0,1470 | 6,25 | D | 0,2460 |
| 1,40 | 54 | 0,0550 | 3,80 | 25 | 0,1495 | 6,35 | E | 0,2500 |
| | - - | - - | | - - | - - | | - - | - - |
| 1,51 | 53 | 0,0595 | 3,86 | 24 | 0,1520 | 6,35 | 1/4 | 0,2500 |
| 1,59 | 1/16 | 0,0625 | 3,91 | 23 | 0,1540 | 6,99 | F | 0,2750 |
| 1,61 | 52 | 0,0635 | 3,97 | 5/32 | 0,1562 | 6,63 | G | 0,2610 |
| 1,70 | 51 | 0,0670 | 3,99 | 22 | 0,1570 | 6,75 | 17/64 | 0,2656 |
| 1,78 | 50 | 0,0700 | 4,04 | 21 | 0,1590 | 6,76 | H | 0,2660 |

Equivalents for Drill Sizes
Figure 1

# CHAPTER 21

# VENTILATION AND HEATING

## TABLE OF CONTENTS


| Title | Chapter Section Subject | Page |
|---|---|---|
| VENTILATION AND HEATING - GENERAL | 21-00-00 | 1 |
| Introduction | 21-00-00 | 1 |
| General Description | 21-00-00 | 1 |
| FRESH AIR DISTRIBUTION - DESCRIPTION | 21-20-00 | 1 |
| General | 21-20-00 | 1 |
| Description and Operation | 21-20-00 | 1 |
| FRESH AIR DISTRIBUTION - MAINTENANCE PRACTICES | 21-20-00 | 201 |
| General | 21-20-00 | 201 |
| Eyeball Ventilators Removal/Installation | 21-20-00 | 201 |
| Heat Relief Valve Removal/Installation | 21-20-00 | 201 |
| HEATING - MAINTENANCE PRACTICES | 21-40-00 | 201 |
| General | 21-40-00 | 201 |
| Heat Exchanger Removal/Installation | 21-40-00 | 201 |

## AIR-CONDITIONING - GENERAL

1. Introduction

   A. This chapter describes those systems and components, which furnish a means of heating and ventilating the cabin.

2. General Description

   A. Fresh air for ventilation comes through air intakes and adjustable eyeball ventilators into the cabin.

   B. For heating and defrosting ram air flows through a heat exchanger at the engine into the cabin and to the windshield. By means of a cabin heat valve the supply of heated air can be controlled.

## FRESH AIR DISTRIBUTION - DESCRIPTION

1. General

A. Fresh air with outside temperature for ventilation and heated fresh air for heating and windshield defrosting can reach the cabin. The amount of fresh air can be regulated.

2. Description and Operation

A. Direct Fresh Air Supply
(1) For the supply of fresh air into the cabin, two adjustable eyeball ventilators are provided. These are located on the far left and right instrument panel.
The ram air reaches through an NACA air intake on each outer side of the cabin and a duct to the eyeball ventilator.
(2) The amount of fresh air can be adjusted by pivot tabs inside the eyeball ventilators.

B. Supply of Heated Fresh Air
(1) Ram air flows through a shroud attached to the exhaust and a duct to the heat relief valve. The heat relief valve is located on the firewall in the engine compartment. By means of it the amount of heated air can be regulated. It is actuated by a control „CABIN HEAT“, located on the center pedestal below the instrument panel, via a control cable.
Passing the firewall the hot air travels through the heated air distributor that is located in the cabin at the firewall. The heated air will be distributed to the area of the pilot and co-pilot's feet and to the canopy.
(2) If the „CABIN HEAT“ knob in the full forward position the heat relief valve is closed and heated air cannot enter the cabin. If the knob is pulled out, the heat relief valve is opened. Additional heat is available by pulling the knob out further. Maximum heat is available with the cabin heat knob in the most rear position.
For maximum effect, the fresh air nozzles should be closed.

## FRESH AIR DISTRIBUTION MAINTENANCE PRACTICES

1. General

   A. Maintenance is limited to removal and installation of the components.

2. Eyeball Ventilators Removal/Installation

   NOTE: Removal of the left and right eyeball ventilator is typical.

   A. Remove Eyeball Ventilator
      (1) Disconnect flexible air duct from eyeball ventilator.
      (2) Remove screws securing eyeball ventilator to the instrument panel. Remove eyeball ventilator.

   B. Install Eyeball Ventilator
      (1) Position eyeball ventilator in the instrument panel and secure with 4 screws.

3. Heat Relief Valve Removal/Installation

   A. Remove Heat Relief Valve
      (1) Remove upper cowling (Refer to 71-10-00).
      (2) Remove clamp securing flexible air duct to heat relief valve. Remove flexible air duct.
      (3) Disconnect control cable from heat relief valve control arm.
      (4) Remove bolts securing heat relief valve to fire wall.
      (5) Remove heat relief valve from aircraft.

   B. Install Heat Relief Valve
      (1) Attach heat relief valve to fire wall using bolts.
      (2) Close valve plate, leave in this position.
      (3) In the cabin move heat control "HEATING" full forward.
      (4) Reconnect control cable to the control arm of the heat relief valve.
      (5) Install flexible air duct to heat relief valve and secure with clamps.
      (6) Install upper cowling (Refer to 71-10-00).

## HEATING - MAINTENANCE PRACTICES

1. General

A. Fresh air is heated up by passing the heat exchanger at the engine.
The heat exchanger consists of a shroud, which is set around the exhaust muffler. Flexible ducts are connected to the heat exchanger for air entering and air exiting. The ram air enters the engine compartment through a inlet located on the lower engine cowling and is then directed via ducting to the heat exchange section of the exhaust muffler. As air passes around the exhaust muffler, it picks up heat from engine exhaust.

B. Maintenance is limited to inspection and removal / installation of the heat exchanger.

2. Heat Exchanger Removal/Installation

A. Remove Heat Exchanger
(1) Remove engine cowling (Refer to 71-10-00).
(2) Remove clamps securing flexible ducts to heat exchanger. Disconnect ducts from heat exchanger.
(3) Remove clamps securing heat exchanger to exhaust muffler.
(4) Carefully remove exchanger from around muffler.

B. Installation heater radiators
(1) Wrap heat exchanger around muffler and secure with clamps.
(2) Reconnect flexible ducts to heat exchanger and secure using clamps.
(3) Install cowling (Refer to 71-10-00).

# CHAPTER 23

# COMMUNICATIONS

## TABLE OF CONTENTS


| Title | Chapter Section Subject | Page | Effectivity |
|---|---|---|---|
| COMMUNICATIONS - GENERAL | 23-00-00 | 1 | |
| Introduction | 23-00-00 | 1 | |
| General Description | 23-00-00 | 1 | |
| SPEECH COMMUNICATION - DESCRIPTION | 23-10-00 | 1 | Bendix/King KX 125 |
| Introduction | 23-10-00 | 1 | Bendix/King KX 125 |
| Description and Operation | 23-10-00 | 1 | Bendix/King KX 125 |
| SPEECH COMMUNICATION - MAINTENANCE | 23-10-00 | 201 | Bendix/King KX 125 |
| General | 23-10-00 | 201 | Bendix/King KX 125 |
| NAV/COM Transceiver Removal/Installation | 23-10-00 | 201 | Bendix/King KX 125 |
| COM Antenna Removal/Installation | 23-10-00 | 201 | Bendix/King KX 125 |
| Inspection/Check | 23-10-00 | 202 | Bendix/King KX 125 |
| SPEECH COMMUNICATION - DESCRIPTION | 23-10-00 | 1 | Garmin 430/530/650 |
| Introduction | 23-10-00 | 1 | Garmin 430/530/650 |
| Description and Operation | 23-10-00 | 1 | Garmin 430/530/650 |
| SPEECH COMMUNICATION - MAINTENANCE | 23-10-00 | 201 | Garmin 430/530/650 |
| General | 23-10-00 | 201 | Garmin 430/530/650 |
| NAV/COM Transceiver Removal/Installation | 23-10-00 | 201 | Garmin 430/530/650 |
| COM Antenna Removal/Installation | 23-10-00 | 201 | Garmin 430/530/650 |
| Inspection/Check | 23-10-00 | 202 | Garmin 430/530/650 |
| SPEECH COMMUNICATION - DESCRIPTION | 23-10-00 | 1 | Garmin SL30/SL40 |
| Introduction | 23-10-00 | 1 | Garmin SL30/SL40 |
| Description and Operation | 23-10-00 | 1 | Garmin SL30/SL40 |
| SPEECH COMMUNICATION - MAINTENANCE | 23-10-00 | 201 | Garmin SL30/SL40 |
| General | 23-10-00 | 201 | Garmin SL30/SL40 |
| NAV/COM Transceiver Removal/Installation | 23-10-00 | 201 | Garmin SL30/SL40 |
| COM Antenna Removal/Installation | 23-10-00 | 201 | Garmin SL30/SL40 |
| Inspection/Check | 23-10-00 | 202 | Garmin SL30/SL40 |
| AUDIO INTEGRATING - MAINTENANCE | 23-50-00 | 201 | PM 501 / PM 500EX |
| General | 23-50-00 | 201 | PM 501 / PM 500EX |
| Audio Control Unit Removal/Installation | 23-50-00 | 202 | PM 501 / PM 500EX |
| AUDIO INTEGRATING - MAINTENANCE | 23-50-00 | 201 | Garmin 340/350 |
| General | 23-50-00 | 201 | Garmin 340/350 |
| Audio Control Unit Removal/Installation | 23-50-00 | 201 | Garmin 340/350 |

# COMMUNICATIONS - GENERAL

1. Introduction

A. This chapter describes and provides maintenance instructions for components and systems used to communicate between occupants of the aircraft and between the aircraft and other aircraft or ground stations.

B. Technical publications available from the manufacturer or vendor of the various components and systems, which are not covered in this manual, must be utilized as necessary for the maintenance of those components and systems.

2. General Description

A. The equipment includes a VHF COM transceiver and an intercom system.

(1) The COM is for radio communication with ground control or other aircraft.
(2) Crew member headsets are connected to the COM radio and controlled by the internal or external intercom system. It facilitates external and internal communication of the crew members.

14 VDC power for the transceiver is controlled by the AVIONICS switch. The radio and the intercom system are protected by the circuit breakers labeled “COM”, “NAV” and “Audio” / ”Intercom”.

B. The following NAV/COM equipment and audio panel combinations may be installed:

(1) Garmin SL40 VHF communications transceiver with an integrated intercom.
(2) Bendix/King KX 125 VHF communications transceiver / VOR/ILS/GS receiver with an integrated intercom. This NAV/COM equipment may be combined with a Bendix/King KI 208 CDI.
(3) Garmin SL30 VHF communications transceiver / VOR/ILS/GS receiver with an integrated intercom. This NAV/COM equipment may be combined with a Garmin GI 106A CDI.
(4) Garmin GNS 430(W), GNS 530(W) or GTN 650 VHF communications transceiver / VOR/ILS/GS receiver / GPS receiver in combination with a Garmin GMA 340 or GMA 350 audio panel.

All devices listed are mounted in the center of the instrument panel in the avionics column.

## SPEECH COMMUNICATION - DESCRIPTION

1. Introduction

   A. This section covers the portion of the system which utilizes voice communication from air-to-air or air-to-ground installations. It includes the VHF speech communications portion of the NAV/COM radio Bendix/King KX 125.
   The KX 125 combines a VHF communication transceiver and a VHF navigation receiver which includes a VOR, localizer and glideslope receiver as well as a built-in course deviation indicator.

2. Description and Operation

   A. Fig. 1 shows the KX 125 front view.

   B. KX 125 VHF Speech Communication Portion – Description
      (1) The left frontside of the KX 125 is used for controlling and displaying purposes. An active and a standby frequency can be adjusted. The left COM frequency window displays the active COM frequency and below the standby COM frequency. To exchange between the two frequencies, push the frequency transfer button on the left window side. COM frequency selection knobs are located below the COM frequency window. The larger knob adjusts the frequency in the MHz range. The smaller knob adjusts the frequency in the KHz range, in 50Khz increments. If the knob is pulled, one can also adjust the frequency in 25 kHz steps.
      (2) Up to S/N AT01-164:
      The VHF COM antenna is mounted to the bottom of the fuselage, behind the baggage compartment.
      S/N AT01-165 and higher:
      The VHF COM antenna is laminated on the inner shell of the vertical stabilizer. The VHF NAV antenna is laminated on the inner shell of the horizontal stabilizer. Both antennas cannot be removed or replaced. A second VHF COM antenna may be installed on the bottom of the fuselage when the aircraft is equipped with a second NAV/COM transceiver.

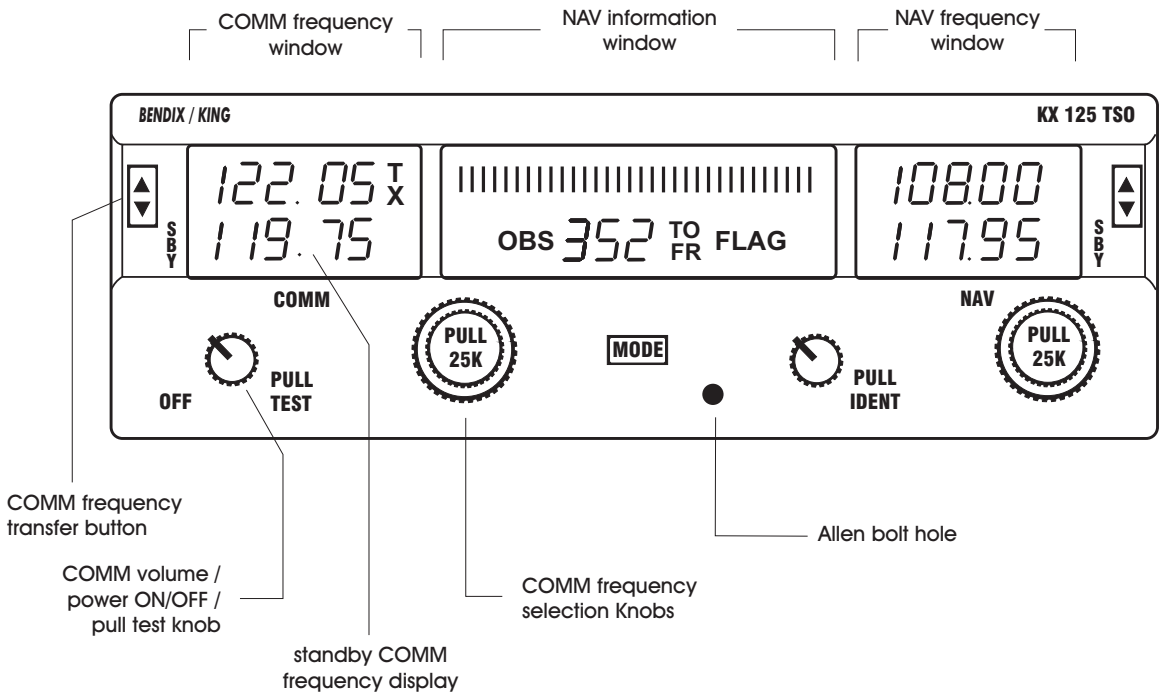


KX 125 Front View
Figure 1

## SPEECH COMMUNICATION – MAINTENANCE

1. General

A. The scope of maintenance is limited to the removal and installation of system components.

B. For further information, refer to Bendix/King KX 125 Maintenance Manual, P/N 5006-05335-0001, latest revision, as well as any other appropriate manufacturer publications. For overhaul and repair, the manufacturer of the equipment has to be consulted.

2. NAV/COM Transceiver Removal/Installation

A. Remove NAV/COM Transceiver
(1) Ensure electrical power to aircraft is OFF.
(2) Insert a 3/32" hex wrench into the mounting hole (see figure 1) on the face of the NAV/COM and engage hex bolt. Turn wrench counterclockwise until locking paw releases unit from mounting tray.
(3) Carefully pull NAV/COM transceiver out of mounting tray.

B. Install NAV/COM Transceiver
(1) Ensure that all plugs at the back of the mounting tray are properly connected.
(2) Carefully slide NAV/COM forward into the mounting tray.
(3) Insert a 3/32" hex wrench into the mounting hole (see figure 1) on the face of NAV/COM and engage hex bolt (max. torque 1,7 Nm [15 in.lbs]). Turn wrench clockwise until locking paw secures unit to mounting tray.
(4) Switch ON BAT and AVIONICS switches.
(5) Turn NAV/COM power ON and verify LCD display illuminates.
(6) Conduct a functional test of the unit.
(7) Turn OFF the NAV/COM and the BAT and AVIONICS switches.

3. COM Antenna Removal/Installation (only external COM antenna)

A. Remove Antenna
(1) Ensure electrical power to aircraft is OFF.
(2) Open baggage compartment door and remove access / inspection plate 211 KC (refer to 25-12-00).
(3) Disconnect coax connector from antenna.
(4) While supporting the antenna, remove 3 nuts securing antenna to fuselage.
(5) Remove mounting plate.
(6) Remove antenna with gasket from outside of fuselage.

B. Install Antenna

CAUTION: WIRING MUST NOT INTERFERE WITH THE OPERATION OF MOVEABLE AIRCRAFT COMPONENTS.

(1) Position antenna with gasket to fuselage.
(2) Install mounting plate from inside the fuselage.
(3) Secure antenna base to fuselage using screws, nuts and washers. Reinstall ground wire.
(4) Check bonding of the re-installed connection. Resistance must not exceed 3 mΩ.
(5) Reconnect coaxial connector and secure.
(6) Install access / inspection plate 211 KC (refer to 25-12-00).

4. Inspection/Check

A. A flight test is recommended after the KX 125 unit installation to ensure proper function. Check the communications transceiver for satisfactory operating range in several altitudes. Verify that the unit is communicating properly with in-panel instruments. Compare on-screen indications with the information depicted on the CDI.

## SPEECH COMMUNICATION – DESCRIPTION

1. Introduction

A. This section covers the portion of the system which utilizes voice communication from air-to-air or air-to-ground installations. It includes the VHF speech communications portion of the NAV/COM radio Garmin GNS 430(W), GNS 530(W) or GTN 650.
The GNS 430(W) / GNS 530(W) / GTN 650 is a combination of a VHF communications transceiver and a navigation management system which includes a GPS sensor and VOR, localizer and glideslope receivers.
For information on the navigation management system of these systems, refer to 34-00-00 and the applicable user manuals.

B. For a complete description of the GNS 430(W) / GNS 530(W) / GTN 650, refer to the Garmin GNS 430 Pilot's Guide and Reference, P/N 190-00140-00, latest revision, the Garmin GNS 430W Pilot's Guide and Reference, P/N 190-00356-00, latest revision, the Garmin GNS 530 Pilot's Guide and Reference, P/N 190-00181-00, latest revision, the Garmin GNS 530W Pilot's Guide and Reference, P/N 190-00357-00, latest revision, or to the Garmin GTN 650 Pilot's Guide and Reference, P/N 190-01004-00, latest revision.

2. Description and Operation

A. Fig. 1 shows the GNS 430 / GTN 650 front view.

B. GNS 430(W) / GNS 530(W) / GTN 650 VHF Speech Communication Portion - Description
(1) The speech communications portion consists of a digitally tuned integrated VHF communications (COM) transceiver. The transceiver receives all narrow- and wide-band VHF communications transmissions within a frequency range of 118.000 MHz to 136.975 MHz in 25.0 kHz steps (760 channels) or for use in Europe in 8.33 kHz steps (2280 channels).
(2) Up to S/N AT01-164:
The VHF COM antenna is mounted to the bottom of the fuselage, behind the baggage compartment.
S/N AT01-165 and higher:
The VHF COM antenna is laminated on the inner shell of the vertical stabilizer. The VHF NAV antenna is laminated on the inner shell of the horizontal stabilizer. Both antennas cannot be removed or replaced. A second VHF COM antenna may be installed on the bottom of the fuselage when the aircraft is equipped with a second NAV/COM transceiver.

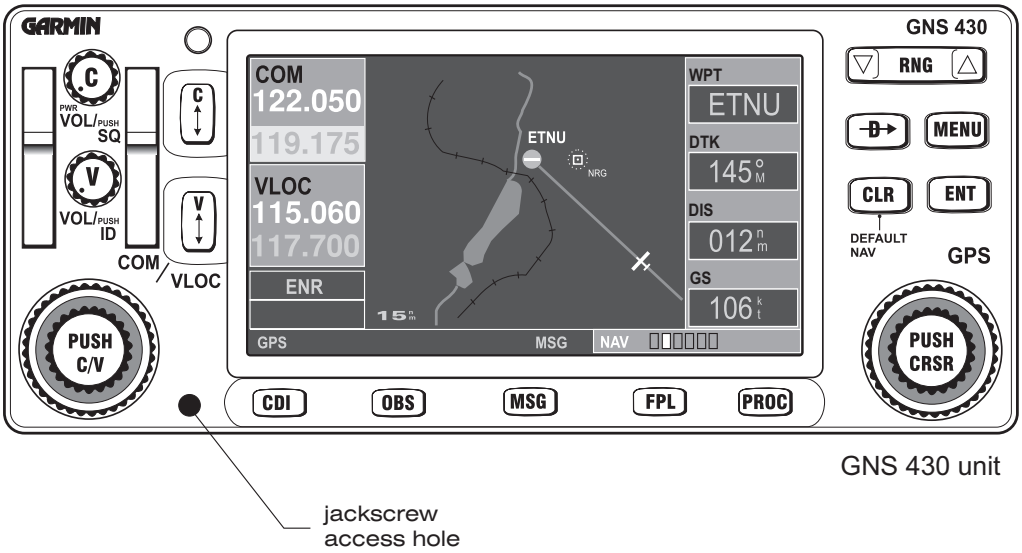


GNS 430 unit

jackscrew
access hole

GTN 650 unit

jackscrew
access hole

GNS 430, GTN 650 Front View
Figure 1

## SPEECH COMMUNICATION – MAINTENANCE

1. General

A. The scope of maintenance is limited to the removal and installation of the components. For removal and installation procedures for the GNS 430(W) / GNS 530(W) / GTN 650 GPS antenna, refer to 34-40-00.

B. For additional maintenance information on the GNS 430(W) / GNS 530(W) / GTN 650 system, refer to the
Garmin 400 Series Installation Manual, P/N 190-00140-02, latest revision, the
Garmin 400W Series Installation Manual, P/N 190-00356-02, latest revision, the
Garmin 500 Series Installation Manual, P/N 190-00181-02, latest revision, the
Garmin 500W Series Installation Manual, P/N 190-00357-02, latest revision, or to the
Garmin GTN 6XX/7XX AML STC Installation Manual, P/N 190-01007-A3, latest revision.

2. NAV/COM Transceiver Removal/Installation

A. Remove NAV/COM
(1) Ensure electrical power to aircraft is OFF.
(2) Insert a 3/32" hex wrench into the mounting hole (see figure 1) on the face of the NAV/COM and engage hex bolt. Turn wrench counterclockwise until locking paw releases unit from mounting tray.
(3) Carefully pull NAV/COM transceiver out of mounting tray.

B. Install NAV/COM
(1) Ensure that all plugs at the back of the mounting tray are properly connected.
(2) Carefully slide NAV/COM forward into the mounting tray.
(3) Insert a 3/32" hex wrench into the mounting hole (see figure 1) on the face of NAV/COM and engage hex bolt (max. torque 1,7 Nm [15 in.lbs]). Turn wrench clockwise until locking paw secures unit to mounting tray.
(4) Switch ON BAT and AVIONICS switches.
(5) Turn NAV/COM power ON and verify LCD display illuminates.
(6) Conduct a functional test of the unit.
(7) Turn OFF the NAV/COM and the BAT and AVIONICS switches.

3. COM Antenna Removal/Installation (only external COM antenna)

A. Remove Antenna
(1) Ensure electrical power to aircraft is OFF.
(2) Open baggage compartment door and remove access / inspection plate 211 KC (refer to 25-12-00).
(3) Disconnect coax connector from antenna.
(4) While supporting the antenna, remove 3 nuts securing antenna to fuselage.
(5) Remove mounting plate.
(6) Remove antenna with gasket from outside of fuselage.

B. Install Antenna

CAUTION: WIRING MUST NOT INTERFERE WITH THE OPERATION OF MOVEABLE AIRCRAFT COMPONENTS.

(1) Position antenna with gasket to fuselage.
(2) Install mounting plate from inside the fuselage.
(3) Secure antenna base to fuselage using screws, nuts and washers. Reinstall ground wire.
(4) Check bonding of the re-installed connection. Resistance must not exceed 3 mΩ.
(5) Reconnect coaxial connector and secure.
(6) Install access / inspection plate 211 KC (refer to 25-12-00).

4. Inspection/Check

A. A flight test is recommended after the GNS 430(W) / GNS 530(W) / GTN 650 unit installation to ensure proper function. Check the communications transceiver for satisfactory operating range in several altitudes. Verify that the unit is communicating properly with in-panel instruments. Compare on-screen indications with the information depicted on the CDI.

## SPEECH COMMUNICATION - DESCRIPTION

1. Introduction

A. This section covers the portion of the system which utilizes voice communication from air-to-air or air-to-ground installations. It includes the VHF speech communications portion of the NAV/COM radio Garmin SL30 or SL40.
The SL30 combines a VHF communication transceiver and a VHF navigation receiver which includes a VOR, localizer and glideslope receiver as well as a built-in course deviation indicator. For information on the navigation portion of the SL30, refer to the SL30 NAV/COM Pilot's Guide, P/N 560-0403-01, latest revision.
The SL40 is a derivative of the SL30 having only its communication functions. The SL30 and SL40 contain an independent, voice-activated intercom unit with a separate power supply.

B. For a complete description of the SL30 / SL40, refer to the Garmin SL30 Pilot's Guide, P/N 560-0403-01 or to the SL40 Pilot's Guide, P/N 560-0954-02, latest revision.

2. Description and Operation

A. Fig. 1 shows the SL30 / SL40 front view.

B. SL30 VHF Speech Communication Portion / SL40 – Description
(1) The knob on the left side of the SL30 / SL40 controls power on/off, volume and squelch test. To turn the power on, the knob must be rotated clockwise past the detent. Once the transceiver is turned on, clockwise rotation of the knob increases the speaker and headphone volume level, counter-clockwise rotation reduces the volume level. Frequency tuning is accomplished by rotating the large (for MHz settings) and small (for kHz settings) knobs to select the desired standby frequency. The active frequency is displayed on the left side of the display, the standby frequency is indicated on the right side adjacent to the active frequency. To switch between the frequencies, the frequency flip/flop button must be pressed. A photocell located on the upper left side of the display automatically adjusts the brightness of the display to the ambient light conditions.
(2) Up to S/N AT01-164:
The VHF COM antenna is mounted to the bottom of the fuselage, behind the baggage compartment.
S/N AT01-165 and higher:
The VHF COM antenna is laminated on the inner shell of the vertical stabilizer. The VHF NAV antenna is laminated on the inner shell of the horizontal stabilizer. Both antennas cannot be removed or replaced. A second VHF COM antenna may be installed on the bottom of the fuselage when the aircraft is equipped with a second NAV/COM transceiver.

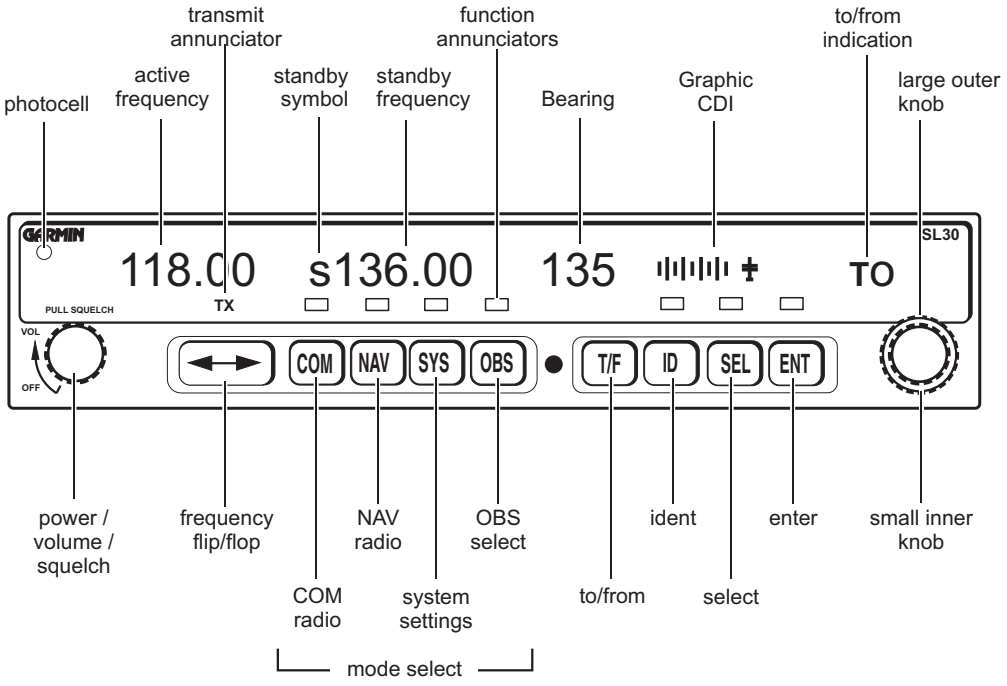


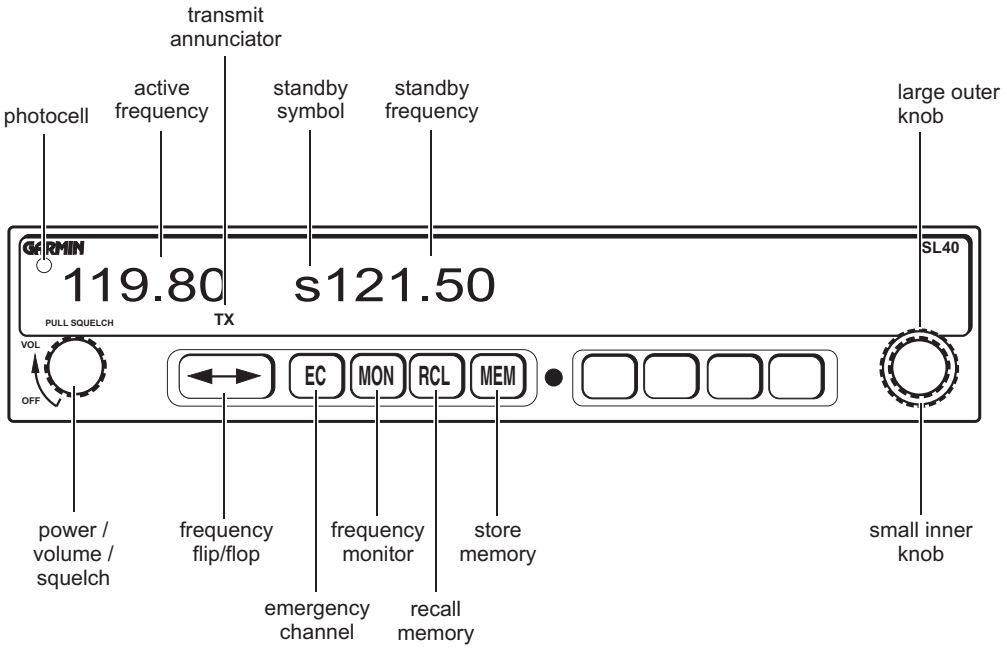


Garmin SL30 / SL40, Front View
Figure 1

## SPEECH COMMUNICATION – MAINTENANCE

1. General

   A. The scope of maintenance is limited to the removal and installation of system components.

   B. For further information, refer to Garmin SL30 NAV/COM Installation Manual, P/N 560-0404-03, latest revision, or Garmin SL40 VHF COM Installation Manual, P/N 560-0956-03, latest revision, as well as any other appropriate manufacturer publications. For overhaul and repair, the manufacturer of the equipment has to be consulted.

2. NAV/COM Transceiver Removal/Installation

   A. Remove NAV/COM Transceiver
      (1) Ensure electrical power to aircraft is OFF.
      (2) Insert a 3/32" hex wrench into the mounting hole (see figure 1) on the face of the NAV/COM and engage hex bolt. Turn wrench counterclockwise until locking paw releases unit from mounting tray.
      (3) Carefully pull NAV/COM transceiver out of mounting tray.

   B. Install NAV/COM Transceiver
      (1) Ensure that all plugs at the back of the mounting tray are properly connected.
      (2) Carefully slide NAV/COM forward into the mounting tray.
      (3) Insert a 3/32" hex wrench into the mounting hole (see figure 1) on the face of NAV/COM and engage hex bolt (max. torque 1,7 Nm [15 in.lbs]). Turn wrench clockwise until locking paw secures unit to mounting tray.
      (4) Switch ON BAT and AVIONICS switches.
      (5) Turn NAV/COM power ON and verify LCD display illuminates.
      (6) Conduct a functional test of the unit.
      (7) Turn OFF the NAV/COM and the BAT and AVIONICS switches.

3. COM Antenna Removal/Installation (only external COM antenna)

   A. Remove Antenna
      (1) Ensure electrical power to aircraft is OFF.
      (2) Open baggage compartment door and remove access / inspection plate 211 KC (refer to 25-12-00).
      (3) Disconnect coax connector from antenna.
      (4) While supporting the antenna, remove 3 nuts securing antenna to fuselage.
      (5) Remove mounting plate.
      (6) Remove antenna with gasket from outside of fuselage.

B. Install Antenna

CAUTION: WIRING MUST NOT INTERFERE WITH THE OPERATION OF MOVEABLE AIRCRAFT COMPONENTS.

(1) Position antenna with gasket to fuselage.
(2) Install mounting plate from inside the fuselage.
(3) Secure antenna base to fuselage using screws, nuts and washers. Reinstall ground wire.
(4) Check bonding of the re-installed connection. Resistance must not exceed 3 mΩ.
(5) Reconnect coaxial connector and secure.
(6) Install access / inspection plate 211 KC (refer to 25-12-00).

4. Inspection/Check

A. A flight test is recommended after the SL30 / SL40 unit installation to ensure proper function. Check the communications transceiver for satisfactory operating range in several altitudes. Verify that the unit is communicating properly with in-panel instruments. Compare on-screen indications with the information depicted on the CDI (SL30 only).

## AUDIO INTEGRATING - MAINTENANCE

1. General

A. This section covers that portion of the system which controls the output of the communication and navigation receivers to crew member headphones and speakers, and the output of the crew member microphones to the communication transmitters.

B. The intercom system consists primarily of the PM 501 / PM 500EX audio control unit, located on the instrument panel, the pilot and co-pilot audio jacks mounted on the middle console near the seat backs and the push-to-talk (PTT) switches located on the control sticks.

C. The intercom system enables the use of headsets on both seats:
(1) The communication between crew members;
(2) Separate adjustment of sound volume at each headset;
(3) Separate regulation of the responding level of the microphones;
(4) The connection of the left or both crew members for audible monitoring of air-ground communication.

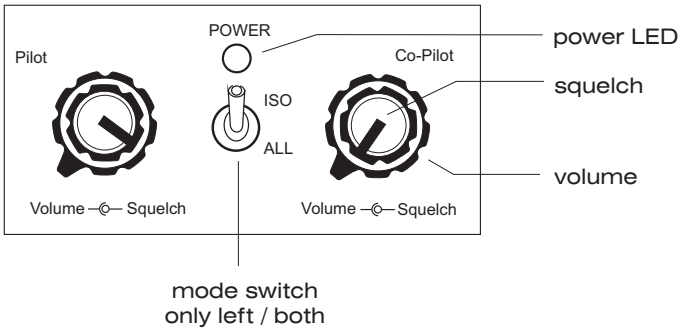


Intercom Control Panel
Figure 201

2. Audio Control Unit Removal/Installation

A. Remove Audio Control Unit
(1) Ensure electrical power to aircraft is OFF.
(2) Disconnect the plug at the back of the audio control unit.
(3) Remove control knob caps on the front panel of the audio control unit.
(4) Loosen and remove nuts attaching audio control unit on the left side to mounting bracket.
(5) Holding the audio control unit, remove two screws on front panel fixing the control unit to instrument panel.
(6) Remove audio control unit.

B. Install Audio Control Unit
(1) Install audio control unit to the instrument panel and secure using two screws.
(2) Secure audio control unit on the left-hand side to the mounting bracket using two nuts.

NOTE: During installation make sure that the position of control knob caps is conform to the position of the control knob axles.

(3) Install the control knob caps on the face of the audio control unit.
(4) Reconnect the plug connector and secure as required at the back of the audio control unit.
(5) Conduct a functional test of the unit.

## AUDIO INTEGRATING - MAINTENANCE

1. General

A. This section covers that portion of the system which controls the output of the communication and navigation receivers to crew member headphones and speakers, and the output of the crew member microphones to the communication transmitters.

B. The GMA 340 / GMA 350 intercom system consists primarily of the GMA 340 / GMA 350 audio control unit, located on the instrument panel in the avionics column, the pilot and co-pilot audio jacks mounted on the middle console near the seat backs and the push-to-talk (PTT) switches located on the control sticks.

C. The Garmin GMA 340 / GMA 350 audio panel (refer to figure 201) provides audio amplification, audio selection, marker beacon control (optional) and a voice activated intercom system for the headsets and microphones. The system allows audio switching for up to three transceivers (COM 1,COM 2 and COM 3) and five receivers (NAV 1, NAV 2, ADF, DME and MKR). A fail-safe mode connects the pilot headphone and microphone to COM 1 if power is removed or if the MIC selector switch is turned to the OFF position.

D. For a complete description of the GMA 340 / GMA 350 audio panel, refer to the Garmin GMA 340 Pilot's Guide, P/N 190-00149-10, latest revision, or to the Garmin GMA 350 Pilot's Guide, P/N 190-01134-12, latest revision.

E. For additional information on maintenance of the GMA 340 / GMA 350 audio panel, refer to the Garmin GMA 340 Installation Manual, P/N 190-00149-01, latest revision, or to the Garmin GMA 350 Installation Manual, P/N 190-01134-11, latest revision.

2. Audio Control Unit Removal/Installation

A. Remove Audio Control Unit
(1) Ensure electrical power to aircraft is OFF.
(2) Insert a 3/32" hex wrench into the mounting hole (see figure 1) on the face of the unit and engage hex bolt. Turn wrench counterclockwise until locking paw releases unit from mounting tray.
(3) Carefully pull audio control unit out of mounting tray.

B. Install Audio Control Unit
(1) Ensure that all plugs at the back of the mounting tray are properly connected.
(2) Carefully slide unit forward into the mounting tray.
(3) Insert a 3/32" hex wrench into the mounting hole (see figure 1) on the face of the unit and engage hex bolt (max. torque 1,7 Nm [15 in.lbs]). Turn wrench clockwise until locking paw secures unit to mounting tray.
(4) Conduct a functional test of the unit.

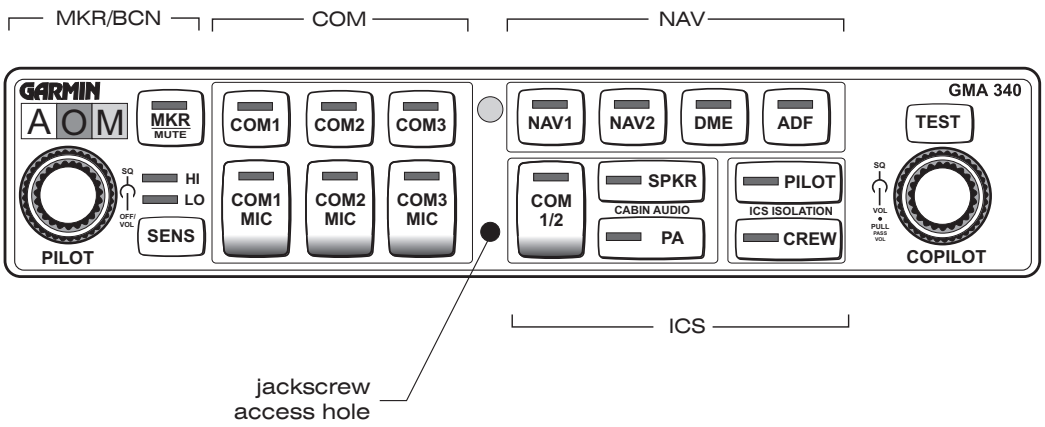


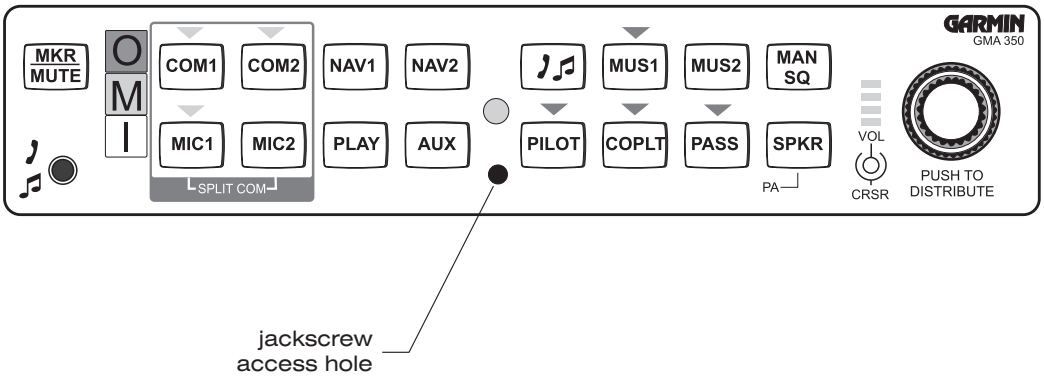


GMA 340 / GMA 350 Audio Panel, Front View
Figure 201

# CHAPTER 24

# ELECTRICAL POWER

## TABLE OF CONTENTS


| Title | Chapter Section Subject | Page | Effectivity |
|---|---|---|---|
| ELECTRICAL POWER - GENERAL | 24-00-00 | 1 | |
| Introduction | 24-00-00 | 1 | |
| General Description | 24-00-00 | 1 | |
| ELECTRICAL POWER - TROUBLESHOOTING | 24-00-00 | 101 | |
| Troubleshooting | 24-00-00 | 101 | |
| ALTERNATOR SYSTEM - DESCRIPTION | 24-20-00 | 1 | |
| Introduction | 24-20-00 | 1 | |
| Description and Operation | 24-20-00 | 1 | |
| ALTERNATOR SYSTEM - MAINTENANCE | 24-20-00 | 201 | |
| General | 24-20-00 | 201 | |
| External Alternator Removal/Installation | 24-20-00 | 201 | |
| External Alternator Drive Belt Removal/Installation | 24-20-00 | 201 | |
| Rectifier-Regulator Unit Removal/Installation | 24-20-00 | 203 | Night-VFR |
| BATTERY SYSTEM - DESCRIPTION | 24-30-00 | 1 | |
| Introduction | 24-30-00 | 1 | |
| Description and Operation | 24-30-00 | 1 | |
| BATTERY SYSTEM - MAINTENANCE | 24-30-00 | 201 | |
| General | 24-30-00 | 201 | |
| Battery Removal/Installation | 24-30-00 | 201 | |
| Battery Relay Removal/Installation | 24-30-00 | 201 | |
| Battery Condition Check | 24-30-00 | 203 | |
| EXTERNAL POWER - MAINTENANCE | 24-40-00 | 201 | Ext. power |
| General | 24-40-00 | 201 | Ext. power |
| External Power Receptacle Removal/Installation | 24-40-00 | 201 | Ext. power |
| External Power Relay Removal/Installation | 24-40-00 | 201 | Ext. power |
| Adjustment/Test | 24-40-00 | 203 | Ext. power |
| Inspection/Check | 24-40-00 | 203 | Ext. power |
| ELECTRICAL LOAD DISTRIBUTION - DESCRIPTION | 24-60-00 | 1 | |
| Introduction | 24-60-00 | 1 | |
| Description and Operation | 24-60-00 | 1 | |
| CIRCUIT BREAKER - MAINTENANCE | 24-61-00 | 201 | |
| General | 24-61-00 | 201 | |
| Circuit Breaker Removal/Installation | 24-61-00 | 201 | |

**TABLE OF CONTENTS (Cont.)**


| Title | Chapter Section Subject | Page | Effectivity |
|---|---|---|---|
| ELECTRICAL SYSTEM WIRING - MAINTENANCE | 24-97-00 | 201 | |
| General | 24-97-00 | 201 | |
| Splicing | 24-97-00 | 201 | |
| Wire Replacement | 24-97-00 | 201 | |

# ELECTRICAL POWER - GENERAL

1. Introduction

   A. This chapter describes the units and components, which generate, control and supply AC and DC electrical power for other systems.

2. General Description

   A. The aircraft is equipped with a 12V DC electrical system. It is powered by a belt driven 600W alternator and a 12V battery which is installed on the front-right side of the firewall.
   All essential electrical accessories in the system are protected by circuit breakers. These are to be found on the right side of the instrument panel.
   Electrical power distribution to the various accessories is characterized through functionality and safety. It is accomplished by two main bus bars - the aircraft bus bar and the avionics bus bar.

   If the aircraft is equipped for Night-VFR, the internal alternator integrated in the ROTAX engine is activated in order to provide a second independent power source.
   To supply DC to the aircraft electrical system this permanent magnet generator is used in combination with a ROTAX specified rectifier-regulator, which is installed at the front-left side of the firewall.

   As an option, the aircraft may be equipped with an external power receptacle mounted on the right side of fuselage just forward of the firewall. The receptacle permits the use of an external power source for cold weather starting and maintenance procedures requiring reliable power for an extended period.

## ELECTRICAL POWER - TROUBLESHOOTING

1. Troubleshooting

   A. If a power problem or a complete blackout occurs, first check all connections to the components and the circuit breakers.

   B. Troubleshooting Chart:

| TROUBLE | POSSIBLE CAUSE | REMEDY |
|---|---|---|
| No alternator output, voltmeter indicates 12 V, ammeter indicates discharge | ALT 1 switch OFF<br>Defective alternator<br>Circuit breaker activated (open) | Turn switch ON.<br>Replace alternator.<br>Troubleshoot circuit and reset circuit breaker. |
| Battery will not supply power or is incapable of cranking engine. | Battery is discharged | Step 1:<br>Place BAT switch and LDG LIGHT switch in ON Position. Measure battery voltage. A normally charged battery will indicate 12,5 volts or more. If . voltage is low, proceed to step 2.<br>If voltage is normal proceed to step 3. |
| | Defective battery | Step 2:<br>Charge battery approx. 30 minutes.<br>If the battery tester indicates a good battery, the cause was a discharged battery. If the tester indicates a defective battery, replace the battery. |
| | Defective wiring or electrical connection between battery terminal and battery relay. | Step 3:<br>With switch BAT in ON position, measure voltage between battery terminal and battery relay.<br>Correct value would be 0 V.<br>If voltage reads 0 V, proceed to step 4.<br>If a voltage reading is obtained, check wiring between battery terminal and battery relay. |
| | Defective battery relay. | Step 4:<br>With switch BAT in ON position, measure voltage between relay terminals.<br>Correct value would be 0 V.<br>If voltage reads 0 V, proceed to step 5. |

| | |
|---|---|
| | If a voltage reading is obtained, replace battery relay. |
| Defective wiring or electrical connection between battery relay and starter relay. | Step 5:<br>With switch BAT in ON position, measure voltage between starter side relay terminal, and starter relay.<br>Correct value would be 0 V.<br>If a voltage reading is obtained, check wiring between starter side relay terminal and starter relay |

## ALTERNATOR SYSTEM - DESCRIPTION

1. Introduction

A. The alternator system supplies the electrical equipment with electrical power when the engine is running and is the main current source in the power supply design.

B. The alternator system consists of the following components:

- external alternator
- alternator circuit breakers
- alternator warning light(s)
- alternator switch
- internal alternator (only Night-VFR equipped aircraft)
- rectifier-regulator unit (only Night-VFR equipped aircraft)

2. Description and Operation

A. The external alternator (ALT 1) is installed in the forward left side of the engine, to the left of the gearbox. It is belt-driven and incorporates an internal voltage regulator. The external alternator is supplied with an excitation voltage by the battery when the ALT1/BAT switch is turned ON. When the engine is running, the alternator generates a three-phase current that is rectified and regulated by the internal voltage regulator. The voltage regulator supplies a 14 V DC voltage to the aircraft bus when engine speed is at or above 800 rpm. The maximum current load is approx. 45 A.
The alternator circuit breaker is installed in the circuit breaker panel on the far right side of the instrument panel and it protects the system from overloading. The red ALT 1 warning light is located in the row of annunciator lights on the instrument panel and indicates undervoltage.

B. Aircraft equipped for Night-VFR additionally use the internal alternator (ALT 2) integrated in the ROTAX engine as a second independent power source. This permanent magnet alternator (250W) does not need any external voltage supply for excitation. To supply DC to the aircraft electrical system it is used in combination with a ROTAX specified rectifier-regulator unit, which is installed on the front-left side of the firewall. The red ALT 2 warning light is located in the row of annunciator lights on the instrument panel. It is controlled by the rectifier-regulator unit and indicates undervoltage.

C. An ammeter monitors power supply. The voltmeter is connected with the aircraft bus bar. The ammeter measures the charge or discharge current to/from the battery. Both instruments are found on the right side of the instrument panel in the instrument cluster.

D. The alternator warning lights and ammeter discharge indication may illuminate during low rpm with an electrical load on the system, for example during low rpm taxi. The lights will extinguish at higher rpm.

E. Refer to the ROTAX Installation Manual (P/N 898643) for more information on the external and internal alternators and the rectifier-regulator unit.

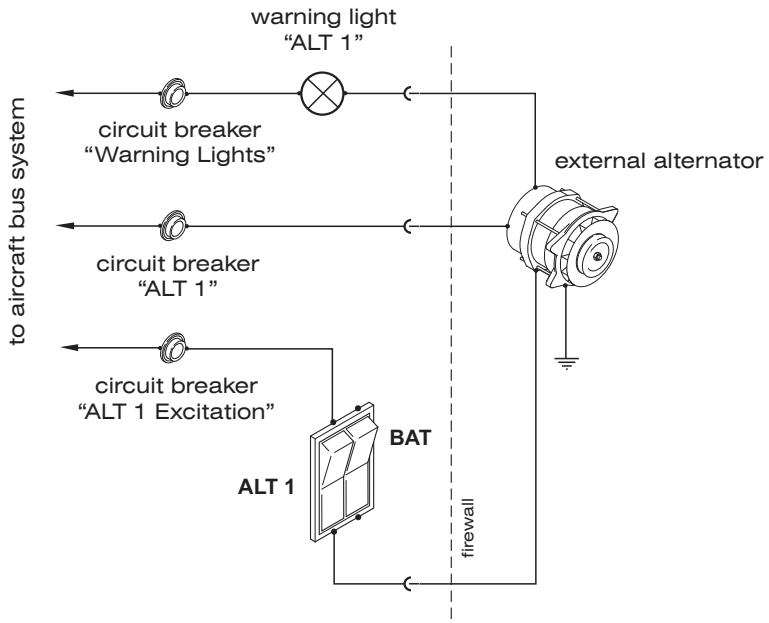


External Alternator System (Schematic)
Figure 1

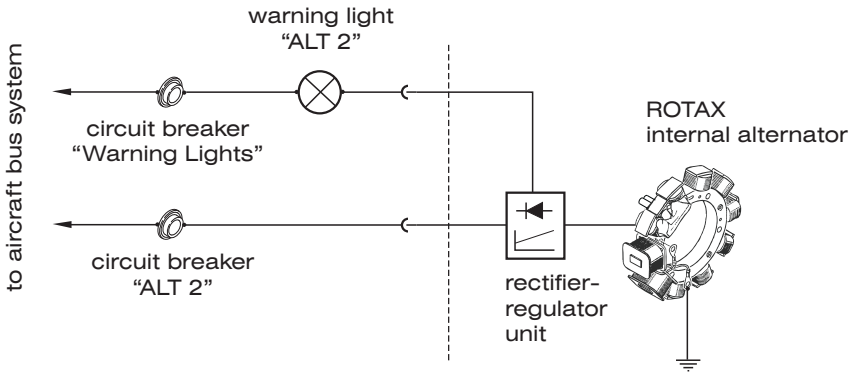


ROTAX Internal Alternator System (Schematic, Night-VFR equipped aircraft only)
Figure 2

## ALTERNATOR SYSTEM - MAINTENANCE

1. General

A. Maintenance is limited to the removal and installation of the (external) alternator, drive belt and rectifier-regulator unit (only Night-VFR equipped aircraft). Refer to the appropriate ROTAX publications for maintenance procedures on the internal alternator.

2. External Alternator Removal/Installation

A. Remove External Alternator
(1) Ensure electrical power to aircraft and ignition switch is OFF. Remove key.
(2) Remove cowling (refer to 71-10-00).
(3) Disconnect battery (refer to 24-30-00).
(4) Disconnect electrical cables (include ground cable) from alternator.
(5) Cut safety wire and loosen adjusting bolt and alternator mounting bolts.
(6) Slip drive belt off alternator pulley.
(7) Remove mounting bolts securing alternator to engine. Remove alternator from engine.

B. Install External Alternator
(1) Position alternator into mounting bracket.
(2) Install shim and mounting bolt as shown in figure 201. Do not tighten yet.
(3) Loosely secure lower alternator mounting boss to adjustment cam using washers and bolt (refer to figure 201).
(4) Place drive belt on alternator pulley. Verify pulleys are aligned.

CAUTION: IF A NEW DRIVE BELT IS INSTALLED: THE ENGINE BELT TENSION SHOULD BE RECHECKED WITHIN THE FIRST 15 TO 20 HOURS OF OPERATION.

(5) Apply a torque wrench to the alternator pulley nut and adjust belt tension so the belt slips at:
(a) 10 - 12 Nm (88 - 106 in.lbs) of torque with a used belt;
(b) 15 - 18 Nm (133 - 159 in.lbs) of torque with a new belt
(6) Tighten adjusting bolt. Torque to 22 Nm (195 in.lbs).
(7) Tighten alternator mounting bolts.
(a) Torque M10 bolt (upper alternator mounting bracket) to 40 Nm (355 in.lbs).
(b) Torque M8 bolt to 22 Nm (195 in.lbs).
(8) Safety wire all bolts.
(9) Reconnect electrical cables including the ground cable.
(10) Reconnect battery (refer to 24-30-00).
(11) Install cowling (refer to 71-10-00).

3. External Alternator Drive Belt Removal/Installation

A. Remove Alternator Drive Belt
(1) Ensure electrical power to aircraft and ignition switch is OFF. Remove key.
(2) Remove engine cowling (refer to 71-10-00).
(3) Disconnect battery (refer to 24-30-00).

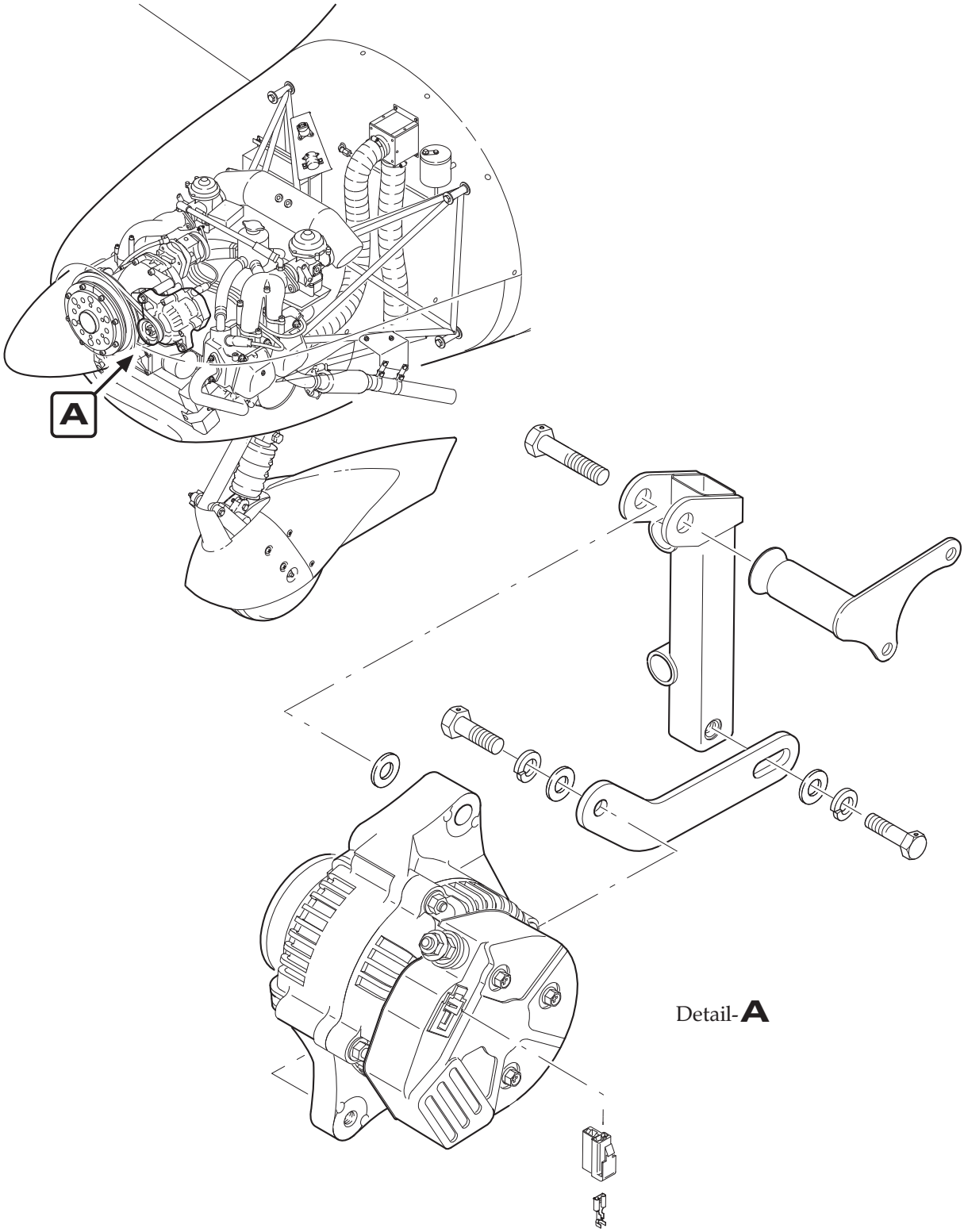


External Alternator Installation
Figure 201

(4) Cut safety wire and loosen adjusting bolt and alternator mounting bolts.
(5) Slip drive belt off alternator pulley.
(6) Remove propeller (refer to 61-10-00).
(7) Remove alternator drive belt.

B. Install Alternator Drive Belt
(1) Install alternator drive belt around drive pulley.
(2) Install propeller (refer to 61-10-00).
(3) Place drive belt on alternator pulley. Verify pulleys are aligned.

CAUTION: IF A NEW DRIVE BELT IS INSTALLED: THE ENGINE BELT TENSION SHOULD BE RECHECKED WITHIN THE FIRST 15 TO 20 HOURS OF OPERATION.

(4) Apply a torque wrench to the alternator pulley nut and adjust the belt tension so the belt slips at:
(a) 10 - 12 Nm (88 - 106 in.lbs) of torque with a used belt;
(b) 15 - 18 Nm (133 - 159 in.lbs) of torque with a new belt
(5) Tighten adjusting bolt. Torque to 22 Nm (195 in.lbs).
(6) Tighten alternator mounting bolts.
(a) Torque M10 bolt (upper alternator mounting bracket) to 40 Nm (355 in.lbs).
(b) Torque M8 bolt to 22 Nm (195 in.lbs).
(7) Safety wire all bolts.
(8) Reconnect battery (refer to 24-30-00).
(9) Install engine cowling (refer to 71-10-00).

4. Rectifier-Regulator Unit Removal/Installation (Ref. Fig. 202, Night-VFR equipped aircraft only)

A. Remove Rectifier-Regulator Unit
(1) Ensure electrical power to aircraft is OFF.
(2) Remove engine cowling (refer to 71-10-00).
(3) Disconnect battery (refer to 24-30-00).
(4) Disconnect all wires from rectifier-regulator unit.
(5) Remove the attachment bolt and the nuts from the mounting plate and rectifier-regulator unit. Attend to the "Nordlock" washers.

B. Install Rectifier-Regulator Unit
(1) Install the rectifier-regulator unit with two screws M8x20 (DIN ISO 4762), four "Nordlock" washers and two nuts M8 (DIN ISO 934) on the mounting plate. Attend to the various washers and their installation sequence.
(2) Connect the wire to the rectifier-regulator unit.
(3) Reconnect battery (refer to 24-30-00).
(4) Install engine cowling (refer to 71-10-00).

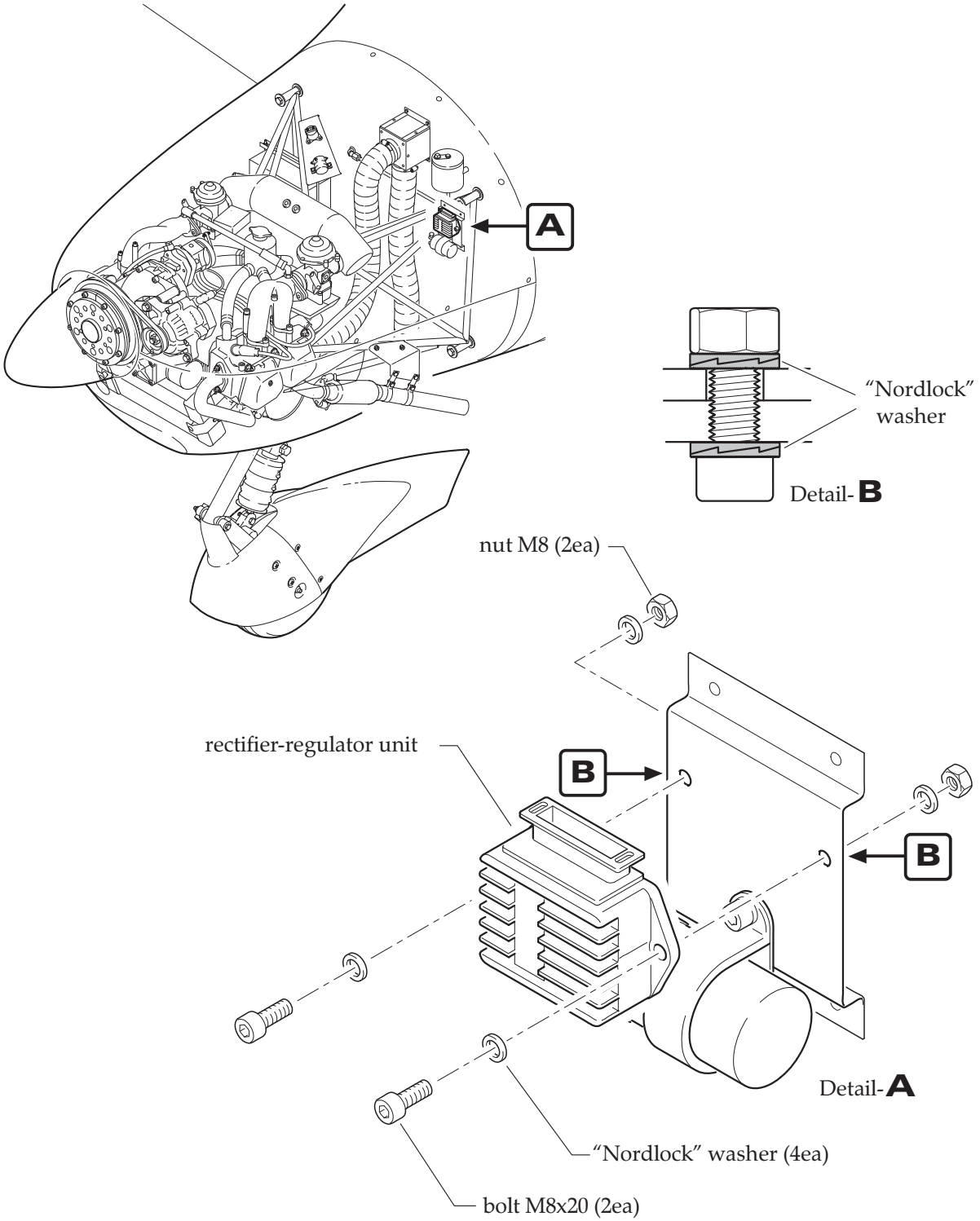


Rectifier-Regulator Unit Installation (Night-VFR equipped aircraft only)
Figure 202

## BATTERY SYSTEM - DESCRIPTION

1. Introduction

A. The battery system supplies power to the electrical equipment if the alternator fails. It represents the auxiliary power source in supply design.

B. The battery system consists of the following components:

- battery
- battery relay
- BAT switch
- voltmeter
- ammeter

2. Description and Operation

A. The aircraft has a 12-volt lead-acid battery, which is installed in a battery tray on the front-right side of the firewall. It is accessible by removing the upper engine cowling. The battery box is vented. The vent line discharges out of the bottom of the engine cowling, preventing the build up of dangerous or explosive gases in the engine compartment. The battery relay is fixed above the battery at the engine mount.

B. To connect the battery to the aircraft bus the BAT switch, located on the lower left instrument panel, must be in the ON position, thus connecting one battery relay terminal to aircraft ground. The other relay terminal is permanently supplied with a positive voltage by the battery. In this way the aircraft bus bar is supplied with current via the battery relay.
The voltmeter is connected with the aircraft bus bar. The ammeter measures the charge or discharge current to/from the battery via a shunt. Both instruments are located on the right instrument panel in the instrument cluster.

## BATTERY SYSTEM (SCHEMATIC)

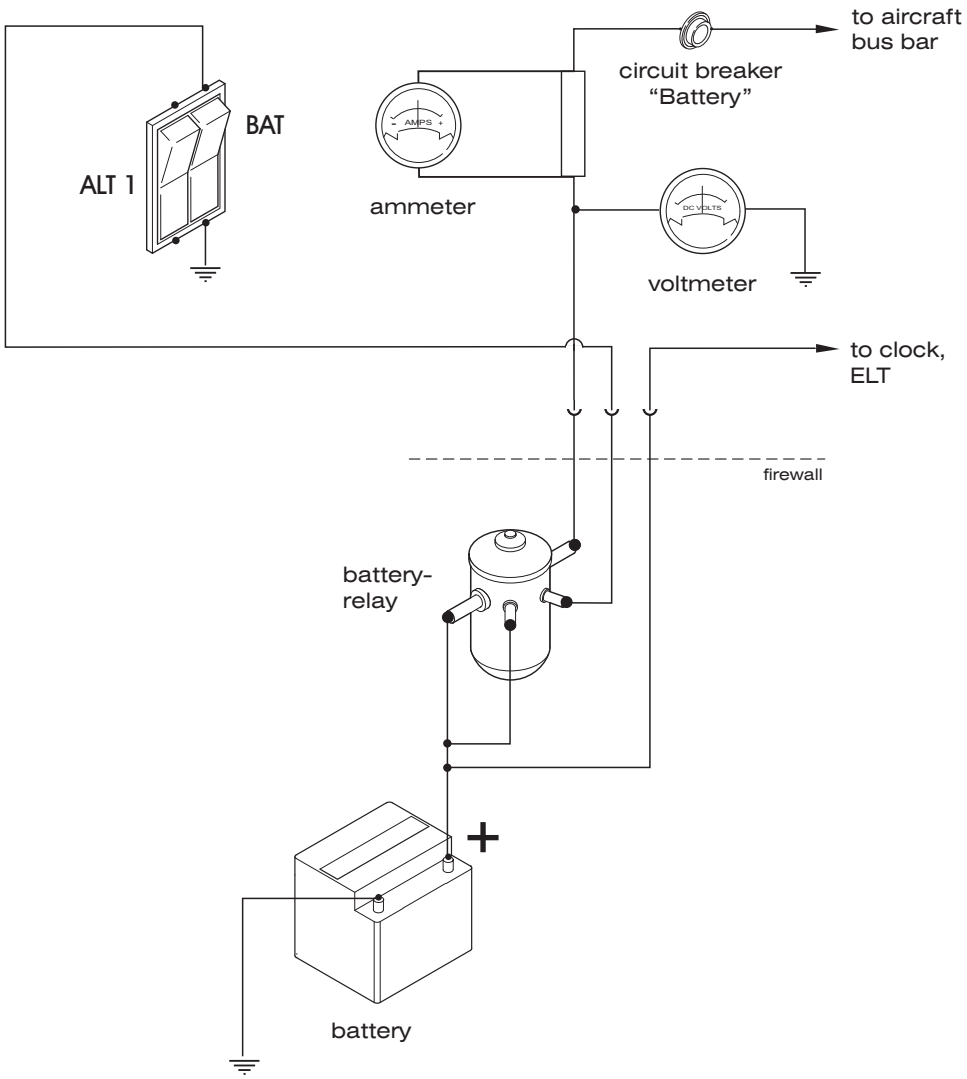


Battery System (Schematic)
Figure 1

## BATTERY SYSTEM - MAINTENANCE

1. General

CAUTION: ALWAYS DISCONNECT THE BATTERY BEFORE DOING ANY MAINTENANCE ON THE ELECTRICAL SYSTEM. DISCONNECT THE NEGATIVE LEAD FIRST. RECONNECT THE NEGATIVE LEAD LAST. SECURE THE BATTERY LEADS FROM ACCIDENTAL CONNECTION DURING MAINTENANCE WORKS.

NOTE: It is recommended to remove the battery from the aircraft before doing any maintenance on the electrical system to avoid the risk of accidental connection.

A. Maintenance is limited to the removal and installation of the battery and the battery relay and a battery condition check. For information on the regular servicing required, refer to 12-17-00.

2. Battery Removal/Installation

A. Remove Battery
(1) Ensure BAT switch is in OFF position.
(2) Remove upper engine cowling (refer to 71-10-00).
(3) Remove battery hold down strap.
(4) Disconnect battery cables.
(5) Remove battery from mounting tray.

B. Install Battery
(1) Place battery into mounting tray and secure with battery hold down strap. Torque nuts to max. 2 Nm (18 in.lbs).

CAUTION: EXCESSIVELY HIGH TORQUES COULD RESULT IN DAMAGE TO THE BATTERY AND ESCAPING BATTERY ACID.

(2) Reconnect battery vent line.
(3) Reconnect battery cables.
(4) Install engine cowling (refer to 71-10-00).

3. Battery Relay Removal/Installation (Ref. Fig. 201)

A. Remove Battery Relay
(1) Ensure electrical power to aircraft is OFF.
(2) Remove engine cowling (refer to 71-10-00).
(3) Disconnect battery (refer to 24-30-00).
(4) Identify and disconnect wires at battery relay.
(5) Remove nuts, washers and bolts securing relay to engine mount and remove relay.

B. Install Battery Relay
   (1) Position and secure battery relay to engine mount using bolts, washers and nuts.
   (2) Identify and reconnect wires to relay.

   CAUTION: DO NOT REMOVE INNER NUT WHEN ASSEMBLING. USE WRENCH TO HOLD INNER NUT IN PLACE WHEN APPLYING OUTER NUT.

   (3) Reconnect battery (refer to 24-30-00).
   (4) Install engine cowling (refer to 71-10-00).

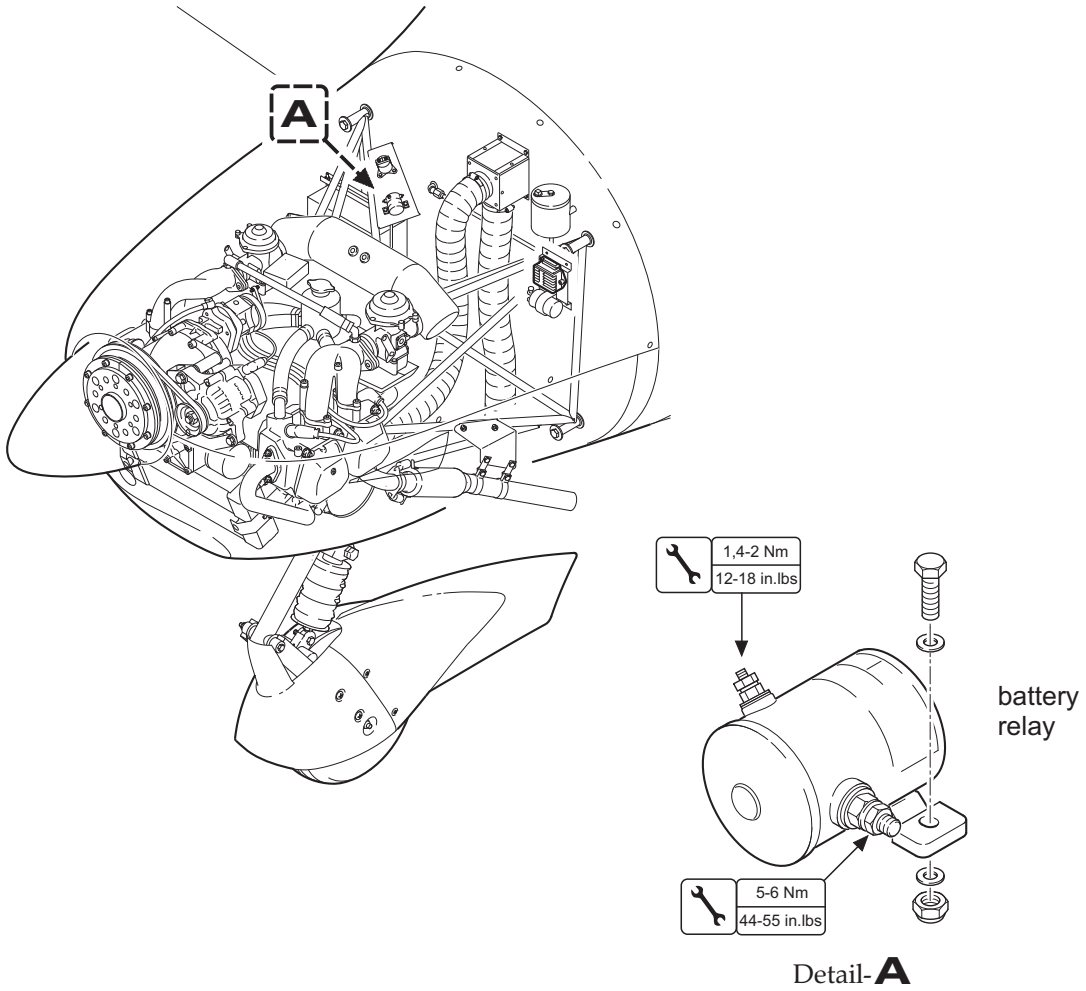


Battery Relay Installation
Figure 201

4. Battery Condition Check

For Night-VFR equipped aircraft, check the battery condition according to one of the following methods:

A. Measure „cold cranking amps“ (CCA) according to SAE using specialized test equipment (Schumacher PTI900X or similar). The battery is airworthy if the tester displays a CCA of at least 80% of the following test values:

| Battery P/N | Battery description | CCA |
|---|---|---|
| AT01-8210-131 | Odyssey PC-310 | 100 |
| AT01-8210-130 | Odyssey PC-1100 | 500 |
| AT01-8210-129 | Odyssey PC-950 | 400 |
| AT01-8210-128 | Exide Sprinter P12V600 | 200 |
| AT01-8210-125 | Concorde RG25XC | 350 |

B. Measure capacity by discharging the battery with a current of approximately 10% of the battery capacity. Use automated test equipment that stops discharging at a voltage not lower than 11,0 Volts. The battery is airworthy if the measured capacity is at least 19 Ampere-hours.

NOTE: Method B is harder on the battery and takes more time, but is more accurate. Test only fully charged batteries and re-charge battery immediately after test.

NOTE: Batteries with P/N AT01-8210-123, AT01-8210-122, AT01-8210-121, AT01-8210-120 and AT01-8210-100 are NOT approved for Night-VFR!

NOTE: Select battery type „AGM“, „SLA“ or „VRLA“ if a setting is available in the test equipment.

## EXTERNAL POWER - MAINTENANCE

1. General

A. This section covers that portion of the system which connects external electrical power to the aircraft's electrical systems. It includes items such as external power receptacle and relays.

B. As an option the aircraft may be equipped with an external power receptacle mounted on the right side of the engine mount, just below the battery. The standard, oval shaped, 3-pin receptacle is accessible through an hinged access plate in the right side of the engine cowling. Furthermore, the system includes an external power relay attached to the engine mount and a relay behind the instrument panel. For wiring refer to 91-00-00.
When a 12 V DC power supply is connected to the external power receptacle the shorter, third connector engages the external power relay, which connects the external power to the aircraft main bus. Simultaneously, the battery switch will be disconnected from the ground terminal by the second relay behind the instrument panel. This prevents an energizing of the battery relay while an external power supply is being used.
The signal power to the external power relay contains an isolation diode to prevent reverse polarity.

C. Maintenance is limited to the removal and installation of components.

2. External Power Receptacle Removal/Installation (Ref. Fig. 201)

A. Remove External Power Receptacle
(1) Ensure electrical power to aircraft is OFF.
(2) Remove engine cowling (refer to 71-10-00).
(3) Disconnect battery (refer to 24-30-00).
(4) Identify and disconnect all wires at EPU receptacle.
(5) Remove nuts, washers and bolts securing receptacle to engine mount and remove receptacle.

B. Install External Power Receptacle
(1) Position and secure EPU receptacle to engine mount using bolts, washers and nuts.
(2) Identify and reconnect wires to EPU receptacle.
(3) Reconnect battery (refer to 24-30-00).
(4) Install engine cowling (refer to 71-10-00).
(5) Perform an external power system functional check (refer to “Adjustment/Test” below).

3. External Power Relay Removal/Installation (Ref. Fig. 201)

A. Remove External Power Relay
(1) Ensure electrical power to aircraft is OFF.
(2) Remove engine cowling (refer to 71-10-00).
(3) Disconnect battery (refer to 24-30-00).
(4) Identify and disconnect wires at external power relay.
(5) Remove nuts, washers and bolts securing relay to engine mount and remove relay.

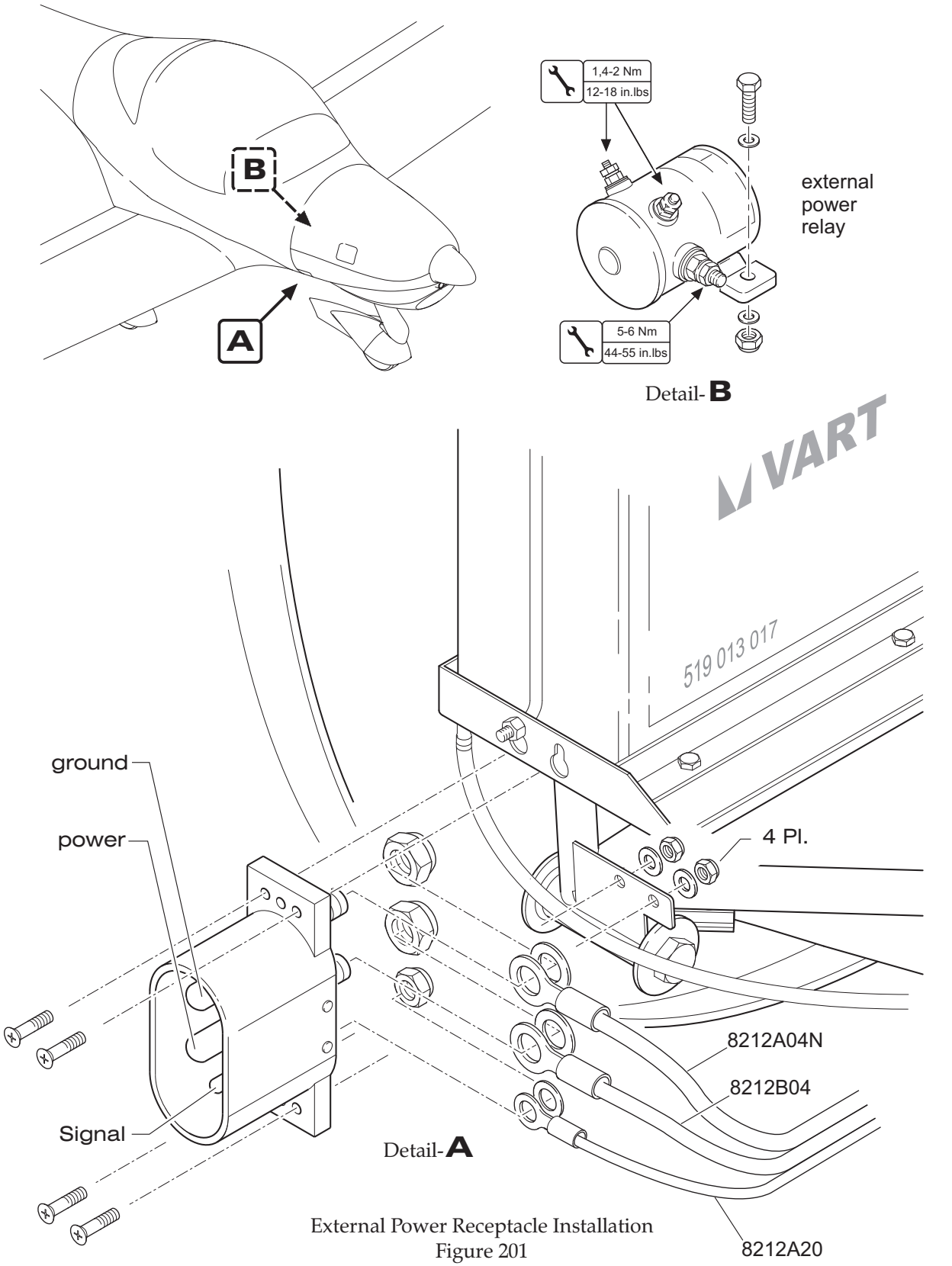


External Power Receptacle Installation
Figure 201

B. Install External Power Relay
(1) Position and secure external power relay to engine mount using bolts, washers and nuts.
(2) Identify and reconnect wires to external power relay.

CAUTION: DO NOT REMOVE INNER NUT WHEN ASSEMBLING. USE WRENCH TO HOLD INNER NUT IN PLACE WHEN APPLYING OUTER NUT.

(3) Reconnect battery (refer to 24-30-00).
(4) Install engine cowling (refer to 71-10-00).
(5) Perform an external power system functional check (refer to "Adjustment/Test below).

4. Adjustment/Test

A. External Power System Functional Check
(1) Connect an 14 V DC external power supply to aircraft.
(2) Place the BAT switch to the ON position.
(3) Verify the voltmeter shows 14 V.
(4) Disconnect external power supply from aircraft.
(5) The voltmeter must show 12 V.
(6) Place the BAT switch in OFF position.

5. Inspection/Check

A. External Power System Inspection/Check
(1) Check latching mechanism and hinge of the external power access plate for integrity and condition.
(2) Remove engine cowling (refer to 71-10-00).
(3) Remove glare shield (refer to 31-10-00).
(4) Check external power receptacle for security.
(5) Check system relays for condition and security.
(6) Inspect electrical cables of the system for proper routing, chafing, broken or loose terminals, general condition, and sharp bends in wiring.
(7) Verify the external power placard is firmly in place and legible.
(8) Install glare shield (refer to 31-10-00).
(9) Install engine cowling (refer to 71-10-00).

## ELECTRICAL LOAD DISTRIBUTION - DESCRIPTION

1. Introduction

A. Distribution of electrical power supplied by the external and optional the internal alternator and the battery is accomplished by bus bars. The bus architecture allows power to be routed to the essential circuitry if any one of the main power sources fails.
All essential electrical accessories in the system are protected by push pull type circuit breakers which can be reset in flight. The circuit breaker panel is on the far right of the instrument panel and each circuit breaker is labeled. All circuit breakers have their rated values identified on the top of the shaft.

B. For power routing throughout the aircraft, refer to wiring diagrams shown in 91-00-00.

2. Description and Operation

A. The electrical system has two main bus bars: the aircraft bus bar and the avionics bus bar. All systems which are essential for aircraft operation are connected to the aircraft bus bar. The avionics bus bar supplies the avionics equipment with power.

B. The external alternator output and the battery are connected with the aircraft bus via 50A circuit breakers. Optional the internal alternator is connected with the aircraft bus via a rectifier-regulator unit and a 25A circuit breaker. The circuit breakers are located on the right side of the instrument panel in the circuit breaker panel.
The current is distributed from the aircraft bus bar via circuit breakers to the electrical circuits of several systems and components and via the AVIONICS switch to the avionics bus bar. From there, it is further distributed to the several components of the avionics equipment via circuit breakers. The AVIONICS switch allows avionics equipment to be removed separately from the residual electrical system.

## CIRCUIT BREAKER - MAINTENANCE

1. General

A. The circuit breaker panel is equipped with circuit breakers of the "push to reset" type. One terminal of each switch/breaker is directly connected to the appropriate bus bar, the other is wired to the component/system it protects.

2. Circuit Breaker Removal/Installation

A. Remove Circuit Breaker
(1) Ensure electrical power to aircraft is OFF.
(2) Disconnect battery (refer to 24-30-00).
(3) Remove glare shield (refer to 31-10-00).
(4) Disconnect wire and bus from selected circuit breaker.
(5) Remove retaining ring and washer from circuit breaker on the front of the instrument panel.
(6) Remove circuit breaker.

NOTE: It may be necessary to loosen more than one circuit breaker to remove the selected circuit breaker.

B. Install Circuit Breaker
(1) Place circuit breaker into position on the instrument panel and secure.
(2) Identify and connect wire and bus to the selected circuit breaker.
(3) Reinstall glare shield (refer to 31-10-00).
(4) Reconnect battery (refer to 24-30-00).

## ELECTRICAL SYSTEM WIRING - MAINTENANCE

1. General

   A. Repairs of the electrical system wiring are limited to the replacement and splicing of electrical wires. In general all repairs have to be carried out by certified repair stations or properly certified and trained persons.

   B. Carry out a complete functional check of the concerned equipment after every repair.

   C. Refer to 91-00-00 for wiring diagrams.

2. Splicing

   A. Splicing is permitted on wiring as long as it does not affect the reliability and the electromechanical characteristics of the wiring. Splicing of power wires, coaxial cables, shielded wires or wire sizes above AWG 18 is not permitted. There should not be more than one splice in any one wire segment between any two connectors or other disconnect points. Refer to AC 43.13-1B, chapter 11, section 13 “Splicing” for further information on splicing procedures and equipment.

3. Wire Replacement

   A. If wires are replaced, they have to be replaced by identical ones (same MIL specification and AWG). New wires have to be routed, fixed and protected in the same manner as the old wires.

# CHAPTER 25

# EQUIPMENT / FURNISHINGS

## TABLE OF CONTENTS


| Title | Chapter Section Subject | Page | Effectivity |
|---|---|---|---|
| EQUIPMENT / FURNISHINGS - GENERAL | 25-00-00 | 1 | |
| Introduction | 25-00-00 | 1 | |
| General Description | 25-00-00 | 1 | |
| SEATS - MAINTENANCE | 25-10-00 | 201 | |
| General | 25-10-00 | 201 | |
| Seat Removal/Installation | 25-10-00 | 201 | |
| Gas Spring Strut Assembly Removal/Installation | 25-10-00 | 203 | |
| RESTRAINT SYSTEM - MAINTENANCE | 25-11-00 | 201 | |
| General | 25-11-00 | 201 | |
| Restraint System Removal/Installation | 25-11-00 | 201 | |
| CABIN INTERIOR - MAINTENANCE | 25-12-00 | 201 | |
| General | 25-12-00 | 201 | |
| Panels, Coverings and Carpets Removal/Installation | 25-12-00 | 202 | |
| CARGO TIE-DOWNS - MAINTENANCE | 25-50-00 | 201 | |
| General | 25-50-00 | 201 | |
| EMERGENCY EQUIPMENT - DESCRIPTION | 25-60-00 | 1 | |
| Introduction | 25-60-00 | 1 | |
| Description and Operation | 25-60-00 | 1 | |
| EMERGENCY LOCATER TRANSMITTER - MAINTENANCE | 25-62-00 | 201 | |
| General | 25-62-00 | 201 | |
| ELT Removal/Installation | 25-62-00 | 201 | |
| ELT Antenna Removal/Installation | 25-62-00 | 201 | |
| Battery Replacement | 25-62-00 | 202 | |
| Adjustment/Test | 25-62-00 | 202 | |
| Inspection/Check | 25-62-00 | 203 | |
| FIRE EXTINGUISHER - MAINTENANCE | 25-66-00 | 201 | Air Total |
| General | 25-66-00 | 201 | Air Total |
| Description and Operation | 25-66-00 | 201 | Air Total |
| Maintenance Instructions | 25-66-00 | 201 | Air Total |
| Fire Extinguisher Removal/Installation | 25-66-00 | 201 | Air Total |
| FIRE EXTINGUISHER - MAINTENANCE | 25-66-00 | 201 | H3R |
| General | 25-66-00 | 201 | H3R |
| Description and Operation | 25-66-00 | 201 | H3R |
| Maintenance Instructions | 25-66-00 | 201 | H3R |
| Fire Extinguisher Removal/Installation | 25-66-00 | 202 | H3R |

# EQUIPMENT / FURNISHINGS - GENERAL

1. Introduction

   A. This chapter describes removable items of equipment and interior furnishings contained in the cabin and baggage compartment.

2. General Description

   A. The seats can be adjusted back and forward. The restraint system of each seat is attached to the fuselage structure. It consists of shoulder harness with an inertia-reel retractor and lap belts which allow for complete freedom of movement of the upper torso area. In the event of a sudden deceleration, the reels lock to provide positive restraint for the user.

   B. The cabin interior is easy to care for and designed for functionally. The panels and coverings can be removed for maintenance purposes.

   C. The baggage compartment is directly behind the seats. It can be loaded through the baggage compartment door on the left side of fuselage.

   D. An emergency locator transmitter (ELT) is installed. The transmitter unit is fitted to the baggage compartment floor immediately behind the right seat back.

## SEATS - MAINTENANCE

1. General

A. The seats are made from fiber composite materials and equipped with integrated safety head rests and removable, hard-wearing seat cushions.
An infinitely adjustable seat meets the requirements of a wide range of pilots. The seat track is angled upward for forward travel so that shorter people will be positioned slightly higher as they adjust the seat forward. A lockable oil/gas spring strut holds the seat in the desired position.
To position the seat, push the seat position control knob located below the seat frame on the right, slide the seat into position, and then release the knob.

2. Seat Removal/Installation

A. Remove Seat
(1) Remove seat cushion.
(2) Remove control knob at the remote control of the gas spring locking valve and then the retaining nut which secures the remote control to attachment bracket.
(3) Disconnect gas spring strut from seat by removing bolt at strut end.
(4) Remove bolts securing seat to seat rails and remove seat.

B. Install Seat
(1) Position seat and secure to seat rails with bolts.
(2) Slide remote control of gas spring locking valve into hole of attachment bracket.
(3) Connect gas spring strut to seat using bolt, washer and self locking nut.
(4) Secure remote control to attachment bracket with retaining nut and install control knob.
(5) Install seat cushion.

3. Seat Rails Removal/Installation

A. Remove Seat Rails
(1) Remove seat (refer to “Seat Removal” above).
(2) Remove screws securing seat rails to fuselage structure and remove seat rails.

B. Install Seat Rails
(1) Position seat rails and secure to fuselage structure with screws.
(2) Install seat (refer to “Seat Installation” above).

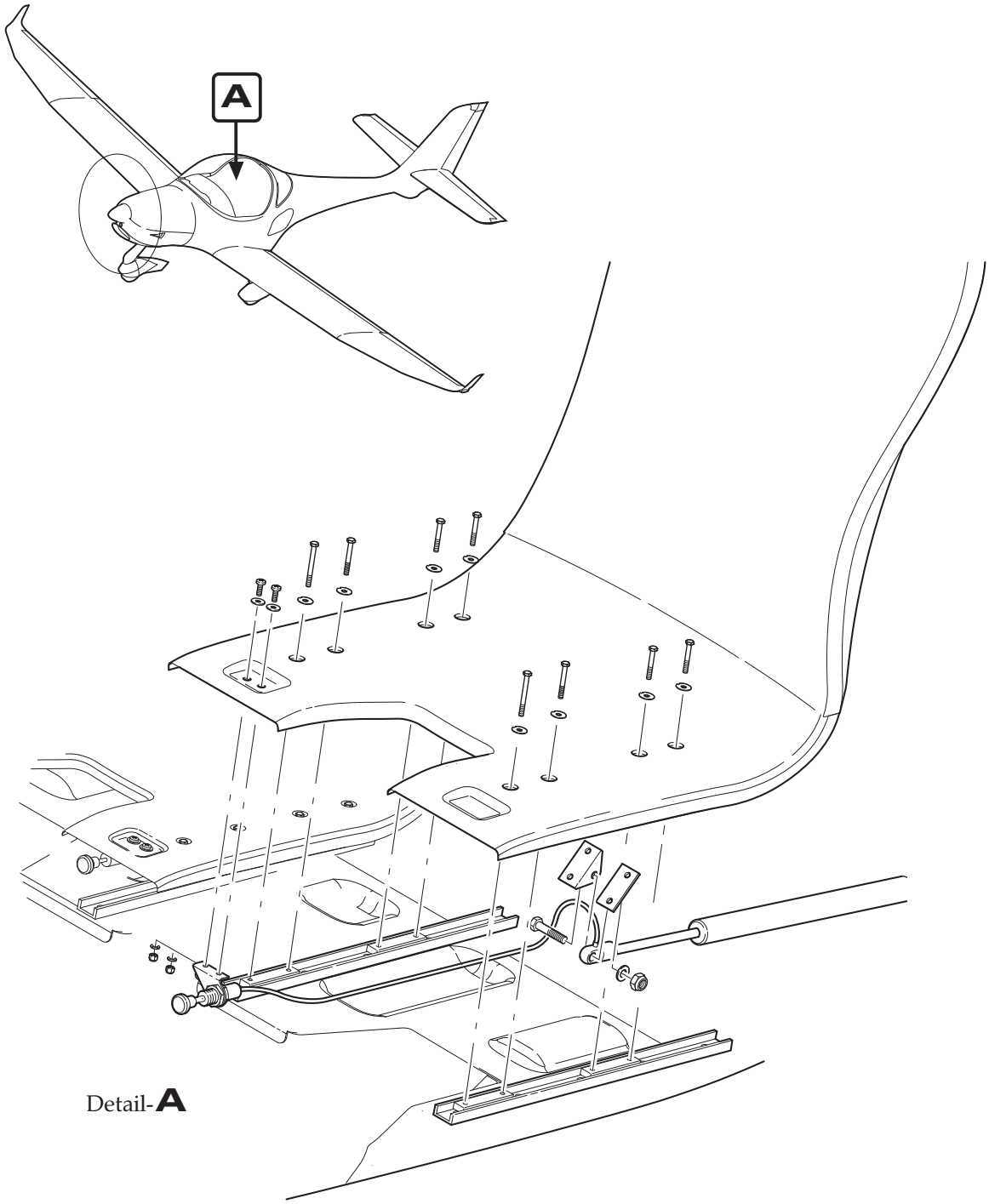


Seat Installation
Figure 201

4. Gas Spring Strut Assembly Removal/Installation

A. Remove Gas Spring Strut Assembly
(1) Remove seat cushion.
(2) Remove control knob at the remote control of the gas spring locking valve and then the retaining nut which secures the remote control to attachment bracket.
(3) Disconnect gas spring strut from seat by removing bolt at strut end.
(4) Disconnect gas spring strut from fuselage structure by removing bolt at strut base and remove gas spring strut assembly.

B. Install Gas Spring Strut Assembly
(1) Slide remote control of gas spring locking valve into hole of attachment bracket.
(2) Reconnect gas spring strut to seat using bolt, washer and self locking nut.
(3) Connect gas spring strut to fuselage structure using bolt, washer and self locking nut.
(4) Secure remote control to attachment bracket with retaining nut and install control knob.
(5) Install seat cushion.

## RESTRAINT SYSTEM - MAINTENANCE

1. General

A. The seats are equipped with automatic, four point seat belts/shoulder harness assemblies. A central rotary buckle is used to fasten the seat belts/shoulder harness. The design incorporates an inertia reel system for the shoulder portion. The shoulder harnesses are attached to the baggage compartment bulkhead, and allow complete freedom of movement of the upper torso. In the event of a sudden deceleration, the reels lock automatically to protect the occupants.
The seat belts are attached to fittings on the landing gear bulkhead.

B. Maintenance is limited to the removal and installation of restraint systems.

2. Restraint System Removal/Installation

A. Remove Restraint System
(1) Open baggage compartment bulkhead access panel.
(2) Remove baggage compartment floor board.
(3) Remove bolts securing inertia reel to baggage compartment bulkhead and remove shoulder harness from aircraft.
(4) Remove bolts securing seat belts to fuselage structure and remove seat belts.

B. Install Restraint System
(1) Install inertia reel in baggage compartment bulkhead using hex bolts, washers and self-locking nuts. Route shoulder belts through belt guide in the seat back.
(2) Attach seat belts to fuselage structure using hex bolts, spacers, washers and self- locking nuts.
(3) Install all items removed for access.

## CABIN INTERIOR - MAINTENANCE

1. General

   A. The panels, coverings and carpets can be removed for maintenance purposes.

   B. For cabin interior cleaning and care refer to chapter 12, section "Cabin interior - Cleaning and Care".

2. Panels, Coverings and Carpets Removal and Installation

   A. Panels are typically attached to the aircraft fuselage structure with small screws.

   B. Seat cushions and carpets are fixed with hook-and-loop fasteners.

   C. See figure 201 for an exploded view of the cabin interior.

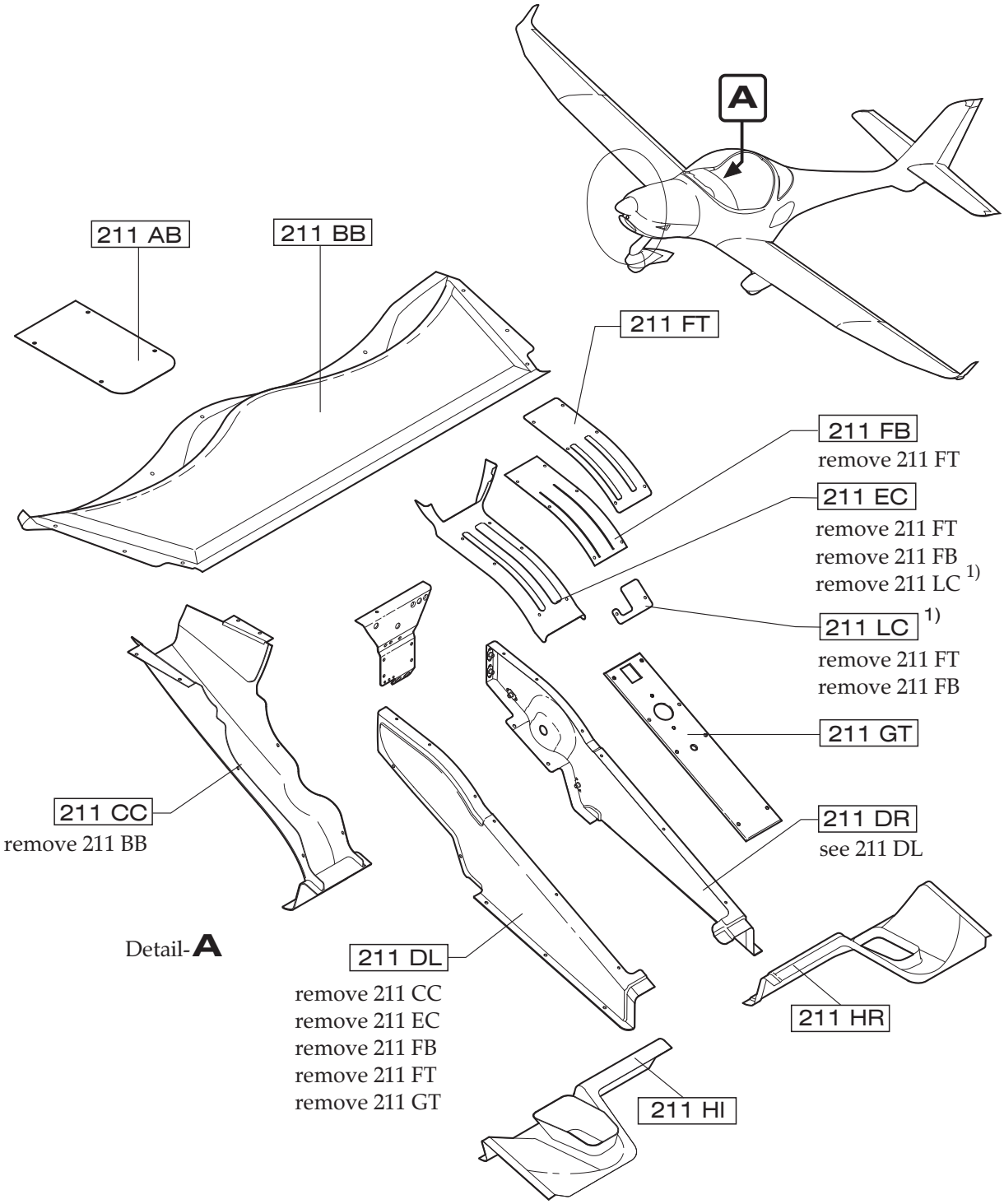


Panels and Covers
Figure 201 (1)

1) AT01-101 up to AT01-114 only.

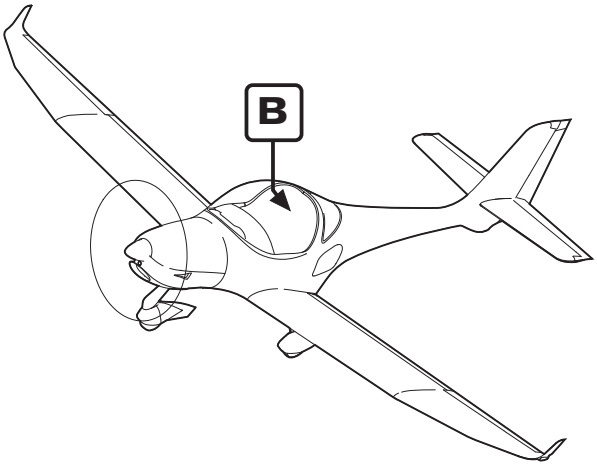


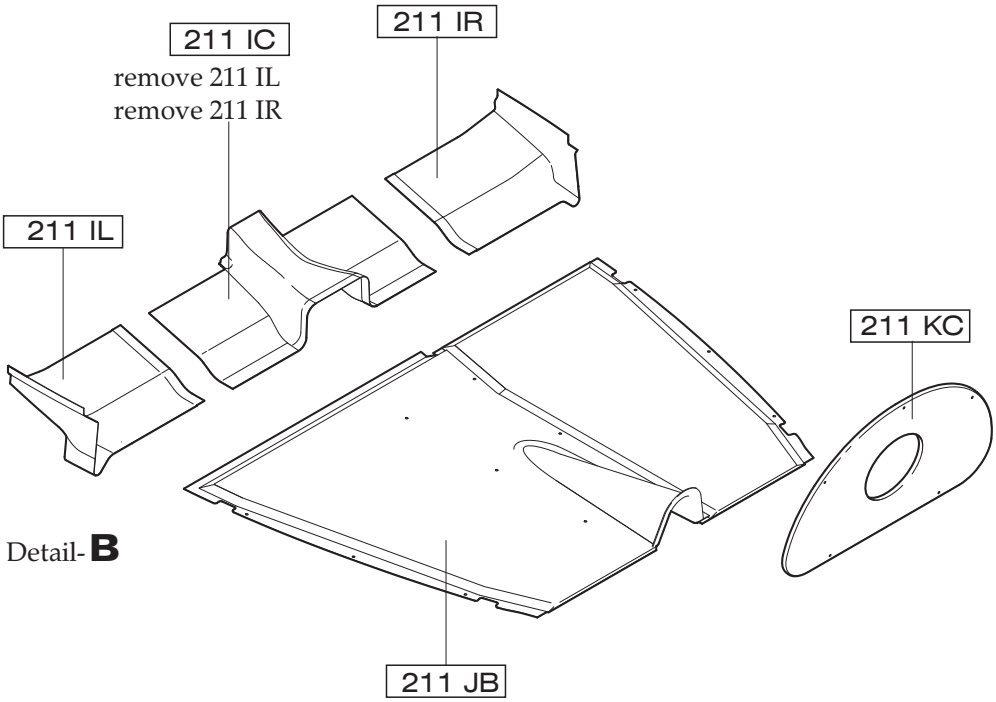


Panels and Covers
Figure 201 (2)

## CARGO TIE-DOWNS - MAINTENANCE

1. General

A. Eight cargo tie-down rings are provided to secure baggage. Baggage nets may be used to hold baggage in position during flight.
The cargo tie-down rings are secured directly to the floorboard by nutplates or they secure the floorboard to the supports.

## EMERGENCY EQUIPMENT - DESCRIPTION

1. Introduction

A. This section describes those items of equipment carried for use in emergencies and includes the emergency locator transmitter (ELT) and a fire extinguisher.

B. As standard the aircraft is equipped with a Kannad 406 AF Compact ELT. Due to the multiplicity of equipment coming onto the market a different ELT may be installed. Refer to the manuals provided by the equipment manufacturer for further information.

2. Description and Operation (Ref. Fig. 1)

A. The ELT is designed to transmit on the frequencies 121,5 MHz (some ELT's additionally 243 MHz) and 406 MHz. The basic emergency frequency 121,5 MHz is mainly used for homing in the final stages of the rescue operations. The 406 MHz frequency is used by the COSPAS-SARSAT satellites for precise pinpointing and identification of the aircraft in distress.
The ELT can be activated either automatically when a crash occurs or manually by means of a control switch on the front panel. The incorporated g-switch activates the unit if it detects a deceleration along the longitudinal axis.
Once activated, the transmitter operates continuously on 121,5 MHZ (and 243 MHz).
Simultaneously, during the first 24 hours of operation, a 112 bit digital message (identification only in the short message configuration) is transmitted on 406 MHz every 50 seconds.

B. The ELT is installed on the baggage compartment floor immediately behind the right seat back. The ELT antenna is located on top of fuselage behind the cabin. The ELT remote control panel / indicator (RCPI) is mounted on the instrument panel, right side.
For in-flight use, both the front panel of the ELT and the RCPI are easily accessible from the pilot's normal seated position. If it is equipped with a portable antenna the unit can be removed from the aircraft and used as a personal locating device when it is necessary to leave the aircraft after an accident.
The ELT front panel includes a 3-position ARM/OFF/ON switch.
With the control switch in ARM position the ELT is in stand-by mode for automatic activation, the normal operation mode. Selecting the ON position starts the transmission on 121,5 / 243 MHz immediately after the self-test, the 406 MHZ transmission starts after 50 seconds.

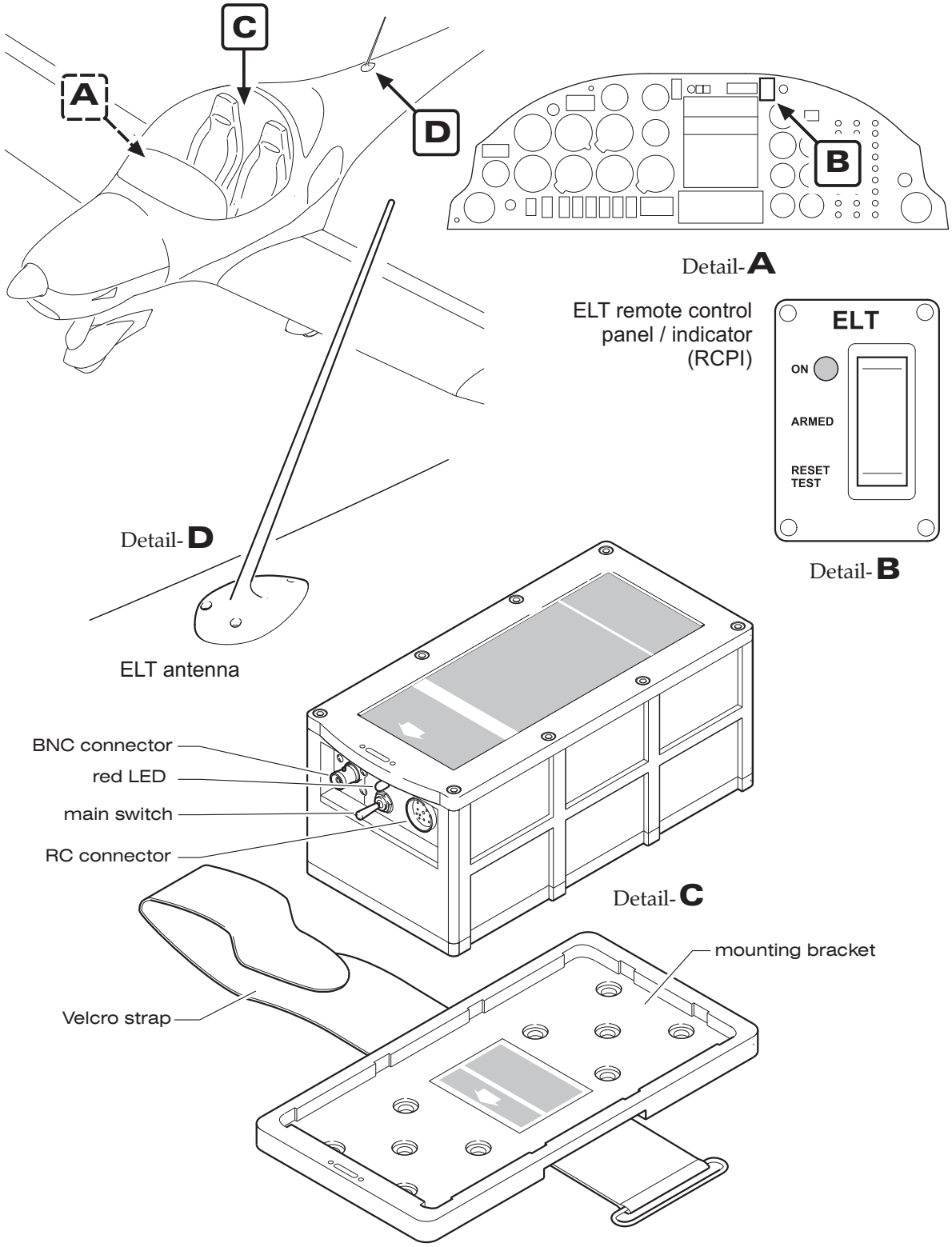


ELT Main Components (Kannad 406 AF Compact)
Figure 1

## EMERGENCY LOCATER TRANSMITTER - MAINTENANCE

1. General

A. This section covers removal and installation procedures of ELT components as well necessary periodic maintenance.

B. Consider all publications / requirements of the appropriate national authority regarding ELT operation and maintenance.

C. Refer to the publications provided by the ELT manufacturer for complete information on installation, programming, operation and maintenance of the ELT.

2. ELT Removal/Installation

A. Remove ELT
(1) Open the baggage compartment door.
(2) Turn the main transmitter control switch on the ELT to the OFF position.
(3) Disconnect antenna cable from front panel off the ELT.
(4) Unstrap transmitter unit and remove from aircraft.

B. Install ELT

WARNING: THE ELT MUST BE MOUNTED WITH THE ARROW (PRINTED ON THE BATTERY CASE AND LABELED "FLIGHT DIRECTION") POINTING IN THE DIRECTION OF FLIGHT.

(1) Install transmitter on to mounting tray with arrow on battery case pointing in direction of flight and secure with strap.
(2) Connect antenna cable to front of ELT.
(3) Perform a functional test (refer to "Adjustment/Test" below).

3. ELT Antenna Removal/Installation

A. Remove ELT Antenna
(1) Open baggage compartment door and remove access / inspection plate 211 KC (refer to 25-12-00).
(2) Disconnect antenna cable from antenna base.
(3) Supporting the antenna, remove nuts and washers securing ELT antenna to fuselage, remove ground wire.
(4) Remove mounting plate.
(5) Remove antenna with gasket from topside of fuselage.

B. Install ELT Antenna
(1) Position antenna with gasket on topside of fuselage.
(2) From inside the fuselage install mounting plate.
(3) Secure antenna base to topside of fuselage using screws, nuts and washers. Reinstall ground wire.
(4) Reconnect coaxial connector and secure.
(5) Install access / inspection plate 211 KC (refer to 25-12-00).
(6) Perform a functional test (refer to "Adjustment/Test" below).

4. Battery Replacement

WARNING: BATTERY REPLACEMENT MAY ONLY BE CARRIED OUT BY A MAINTENANCE ORGANIZATION.

A. The transmitter battery expiry date is fixed at 5 or 6 years after manufacture depending on manufacturer. Battery replacement is mandatory:
(1) after any activation for distress purposes;
(2) after any unintentional activation for an unknown duration;
(3) after more than one hour of real transmission (cumulated duration);
(4) before or on battery expiration date.

NOTE: The identification and maintenance marking affixed to the ELT casing provides information on battery (type, expiry date), identification data programmed in the ELT (protocol, identification number, hexadecimal transcription of the beacon identification code) and aircraft (tail number).

5. Adjustment/Test

A. For signal transmission test, operational test of the controls and crash sensor and self-test procedures refer to the Kannad 406 AF Compact Installation/Operation Manual, P/N 0141922, respectively to the documentation provided by the ELT manufacturer.

6. Inspection/Check

A. The following inspections must be performed at least once every 12 months. For inspection of the Kannad 406 AF Compact ELT, refer to the Kannad 406 AF Compact Installation/Operation Manual, P/N 0141922.

(1) Remove ELT from mounting bracket (refer to "ELT Removal/Installation" above).
(2) Inspect ELT, mounting bracket and fasteners for cracks and other obvious damage.
(3) Inspect cable connection for cuts or abrasions on its outer jacket. Disconnect the BNC connectors at both ends. Examine the BNC connectors and the mating plug on the antenna and ELT unit for any signs of corrosion or damage.
(4) Gain access to the ELT battery and inspect. No corrosion should be detectable. Verify that the batteries are approved and check the expiration date. Replace if necessary.
(5) Verify the external placard "ELT LOCATED HERE" is firmly in place and legible.
(6) Perform ELT functional test (refer to "Adjustment/Test" above) and reinstall ELT.

# FIRE EXTINGUISHER - MAINTENANCE

1. General

A. The aircraft is equipped with a liquefied-gas type fire extinguisher AIR TOTAL HAL 1 mounted in a quick-release bracket attached to the floor board of the baggage compartment, behind the right seat.
The fire extinguisher uses Halon 1211, a liquid gas which is non-toxic and is approved for use on class A, B (liquid, grease) and class C (electrical equipment) fires.

B. For more information on the fire extinguisher, refer to the operating instructions for fire extinguishers AIR TOTAL HAL 1; HAL 1,2; HAL 2,5 supplied with the extinguisher.

2. Description and Operation

A. Technical data:

| | | |
|---|---|---|
| (1) | Extinguishing agent | Halon 1211 |
| (2) | Fire class GER. | ABC |
| (3) | U.S. class | ABC |
| (4) | Total weight | 2,2 kg (- 2% / year, max. 10%) |
| (5) | Filling pressure | 11 bars |

B. Handling
(1) Lift carrying handle.
(2) Press down safeguard.
(3) Depress trigger.

3. Maintenance Instructions

B. The charge pressure must be checked regularly via the manometer. Verify that the seal wire is not broken. After use, the extinguisher must be refilled by the manufacturer. After 10 years, a major overhaul must be carried out by the manufacturer.

4. Fire Extinguisher Removal/Installation

A. Remove Fire Extinguisher
(1) Release quick-release clamp.
(2) Remove fire extinguisher from bracket assembly.

B. Install Fire Extinguisher
(1) Position fire extinguisher in bracket assembly.
(2) Secure with quick release clamp.

## FIRE EXTINGUISHER - MAINTENANCE

1. General

A. The aircraft is equipped with a liquefied-gas type fire extinguisher H3R Aviation RT A400 mounted in a quick-release bracket attached to the floor board of the baggage compartment, behind the right seat.
The fire extinguisher uses Halon 1211 / 1301, a liquid gas which is non-toxic and is approved for use on class B (liquid, grease) and class C (electrical equipment) fires.

B. For more information on the fire extinguisher, refer to the instruction manual for the fire extinguisher supplied with the extinguisher. See also the "Monthly Inspection Record".

2. Description and Operation

A. Technical data:

| | | |
|---|---|---|
| (1) | Extinguishing agent | Halon 1211 / 1301 |
| (2) | Fire class GER. | A, B, C |
| (3) | U.S. class | A, B, C |
| (4) | Total weight | 0.530 kg (± 10g) |

B. Handling
(1) Lift carrying handle.
(2) Pull out pin.
(3) Press lever.

3. Maintenance Instructions

A. Inspect monthly.
B. Verify that the yellow seal wire is not broken.
C. No obvious physical damage, corrosion, or clogged nozzle.
D. HMIS label (Hazardous Materials Identification System) is in place.
E. Weigh the unit and return to the manufacturer if the gross weight is below 500g.

NOTE: When an inspection reveals a deficiency in any of the conditions listed above, the fire extinguisher must be removed from service, not discharged, and returned to H3R, a fire equipment dealer or distributor so that the halon can be recovered.

F. After use, the extinguisher must be returned to the manufacturer.
G. After 12 years, remove extinguisher from service regardless of condition.

4. Fire Extinguisher Removal/Installation

A. Remove Fire Extinguisher
(1) Release quick-release clamp.
(2) Remove fire extinguisher from bracket assembly.

B. Install Fire Extinguisher
(1) Position fire extinguisher in bracket assembly.
(2) Secure with quick release clamp.

# CHAPTER 27

# FLIGHT CONTROLS

## TABLE OF CONTENTS


| Title | Chapter Section Subject | Page |
|---|---|---|
| FLIGHT CONTROLS - GENERAL | 27-00-00 | 1 |
| Introduction | 27-00-00 | 1 |
| General Description | 27-00-00 | 1 |
| AILERON CONTROL SYSTEM - DESCRIPTION | 27-10-00 | 1 |
| Introduction | 27-10-00 | 1 |
| Description and Operation | 27-10-00 | 1 |
| AILERON CONTROL SYSTEM - MAINTENANCE | 27-10-00 | 201 |
| General | 27-10-00 | 201 |
| Control Stick Removal/Installation | 27-10-00 | 201 |
| Pushrod 1 Removal/Installation | 27-10-00 | 201 |
| Front Bellcrank Removal/Installation | 27-10-00 | 201 |
| Pushrod 2 Removal/Installation | 27-10-00 | 203 |
| Rear Bellcrank Removal/Installation | 27-10-00 | 203 |
| Pushrod 3 Removal/Installation | 27-10-00 | 203 |
| Pushrod 4 Removal/Installation | 27-10-00 | 205 |
| Aileron Bellcrank Removal/Installation | 27-10-00 | 205 |
| Inspection/Check | 27-10-00 | 205 |
| Adjustment/Test | 27-10-00 | 207 |
| RUDDER CONTROL SYSTEM - DESCRIPTION | 27-20-00 | 1 |
| Introduction | 27-20-00 | 1 |
| Description and Operation | 27-20-00 | 1 |
| RUDDER CONTROL SYSTEM - MAINTENANCE | 27-20-00 | 201 |
| General | 27-20-00 | 201 |
| Control Cables | 27-20-00 | 201 |
| Rudder Pedal Assembly Removal/Installation | 27-20-00 | 201 |
| Control Cable Removal/Installation | 27-20-00 | 203 |
| Inspection/Check | 27-20-00 | 205 |
| Adjustment/Test | 27-20-00 | 205 |
| ELEVATOR CONTROL SYSTEM - DESCRIPTION | 27-30-00 | 1 |
| Introduction | 27-30-00 | 1 |
| Description and Operation | 27-30-00 | 1 |
| ELEVATOR CONTROL SYSTEM - MAINTENANCE | 27-30-00 | 201 |
| General | 27-30-00 | 201 |
| Elevator Torque Tube Assy Removal/Installation | 27-30-00 | 201 |
| Pushrod 1 Removal/Installation | 27-30-00 | 201 |
| Elevator Bellcrank Removal/Installation | 27-30-00 | 203 |

TABLE OF CONTENTS (Cont.)


| Title | Chapter Section Subject | Page |
|---|---|---|
| Inspection/Check | 27-30-00 | 203 |
| Adjustment/Test | 27-30-00 | 203 |
| ELEVATOR TRIM CONTROL - DESCRIPTION | 27-31-00 | 1 |
| Introduction | 27-31-00 | 1 |
| Description and Operation | 27-31-00 | 1 |
| ELEVATOR TRIM CONTROL - MAINTENANCE | 27-31-00 | 201 |
| General | 27-31-00 | 201 |
| Trim Actuator Removal/Installation | 27-31-00 | 201 |
| Inspection/Check | 27-31-00 | 201 |
| FLAP CONTROL SYSTEM - DESCRIPTION | 27-50-00 | 1 |
| Introduction | 27-50-00 | 1 |
| Description and Operation | 27-50-00 | 1 |
| FLAP CONTROL SYSTEM - MAINTENANCE | 27-50-00 | 201 |
| General | 27-50-00 | 201 |
| Flap Actuator Assembly Removal/Installation | 27-50-00 | 201 |
| Torque Tube Assembly Removal/Installation | 27-50-00 | 201 |
| Flap Pushrod Removal/Installation | 27-50-00 | 201 |
| Inspection/Check | 27-50-00 | 203 |
| Adjustment/Test | 27-50-00 | 206 |

# FLIGHT CONTROLS - GENERAL

1. Introduction

   A. This chapter contains information about the flight controls used to manually control the aircraft in flight. It also includes functional and maintenance information about the flaps.

2. General Description

   A. The conventionally designed flight control system is divided into aileron control, rudder control, elevator control and the wing flaps system. The aircraft is equipped with dual controls.
   The control stick and rudder pedals are used for control input. Elevator trim can be actuated electrically. Aileron and elevator control motion is transferred to the control surfaces via pushrods and bellcranks. The rudder control system utilizes control cables and bellcranks for rudder actuation. The flaps are operated and fixed in the desired position by an electrical flap actuator.

   B. For dimensions, areas and free play tolerances of the control surfaces refer to 06-00.

## AILERON CONTROL SYSTEM - DESCRIPTION

1. Introduction

   A. This section describes that portion of the flight control system which controls the position and movement of the ailerons. The rigging procedure for the aileron control system is also provided. The ailerons are actuated via pushrods and bellcranks. Each aileron has weight compensation. To correct the tendency to roll precisely, a ground-adjustable trim tab is provided at the leading edge of the left aileron.

2. Description and Operation

   A. For aileron control system design and function refer to figure 1.

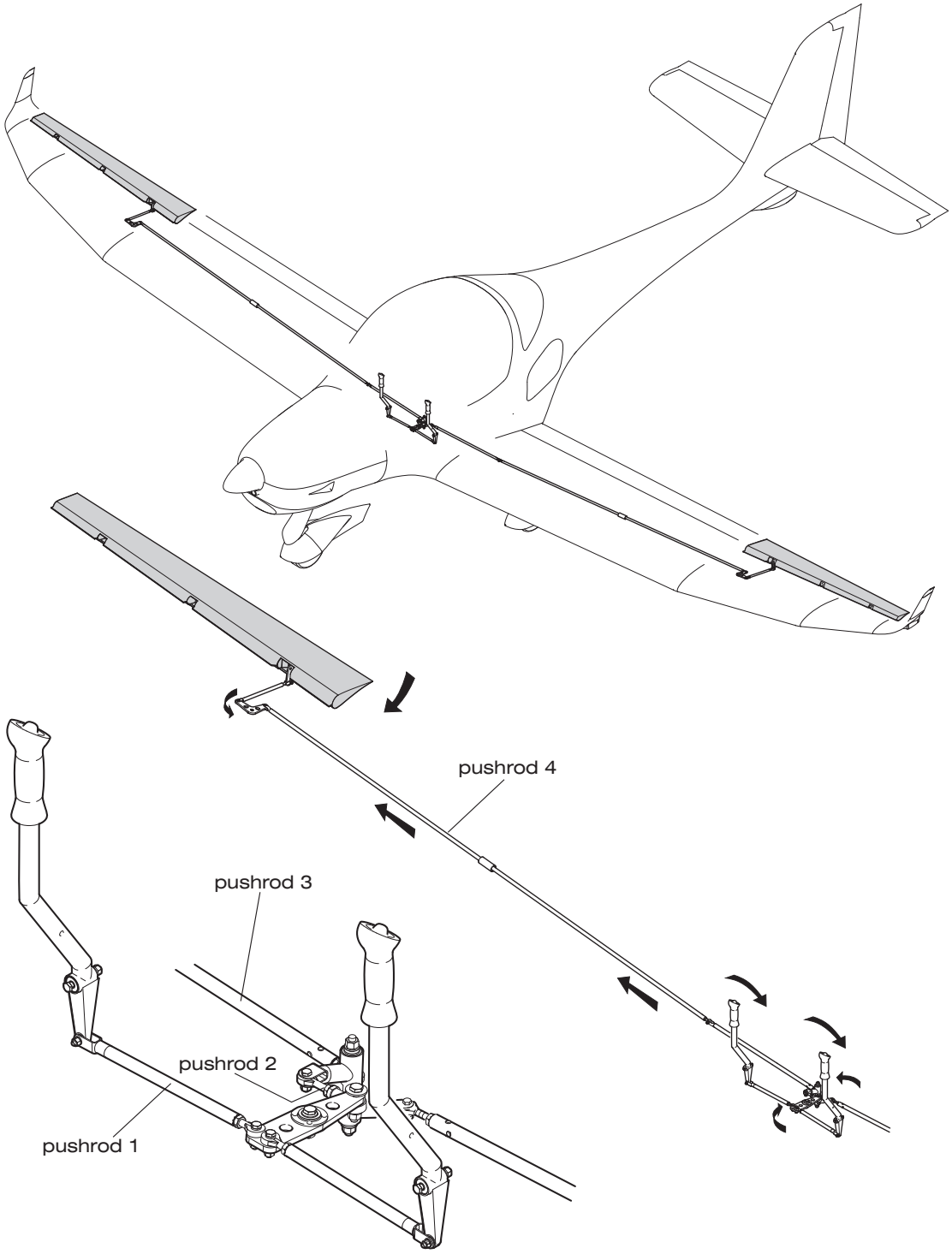


Aileron Control System Design and Function
Figure 1

## AILERON CONTROL SYSTEM - MAINTENANCE

WARNING: WHEN INSTALLING COMPONENTS OF CONTROL SYSTEM, NEW SELF-LOCKING NUTS SHOULD ALWAYS BE USED. NEVER USE A SELF-LOCKING NUT MORE THAN ONCE.

1. General

   A. For a breakdown of components, refer to figure 201, 202 and 203.

2. Control Stick Removal/Installation

   A. Remove Control Stick
      (1) Remove access panel 211 HL (HR) (refer to 25-12).
      (2) Disconnect electrical cable to the transmission button.
      (3) Disconnect pushrod at control stick base.
      (4) Remove bolt securing control stick to torque tube assembly and remove stick.

   B. Install Control Stick
      (1) Position control stick and secure to torque tube assembly using bolt, washer and nut.
      (2) Connect pushrod to control stick base.
      (3) Reconnect electrical cable to the transmission button.
      (4) Install access panel 211 HL (HR) (refer to 25-12).

3. Pushrod Removal/Installation

   A. Remove Pushrod 1
      (1) Remove access panel 211 HL (HR) (refer to 25-12).
      (2) Disconnect pushrod at control stick base.
      (3) Disconnect pushrod at front bell crank and remove pushrod.

   B. Install Pushrod 1
      (1) Connect pushrod to front bellcrank and control stick base.
      (2) Perform aileron control system inspection/check (refer to “Inspection/Check” below).
      (3) Install access panel 211 HL (HR) (refer to 25-12).

4. Front Bellcrank Removal/Installation

   A. Remove Front Bellcrank
      (1) Remove access plate 210 AB (refer to 06-30).
      (2) Remove access panel 211 HL and 211 HR (refer to 25-12).
      (3) Disconnect pushrods at front bellcrank.
      (4) Remove pivot bolt securing bellcrank to bellcrank brackets and remove bellcrank.

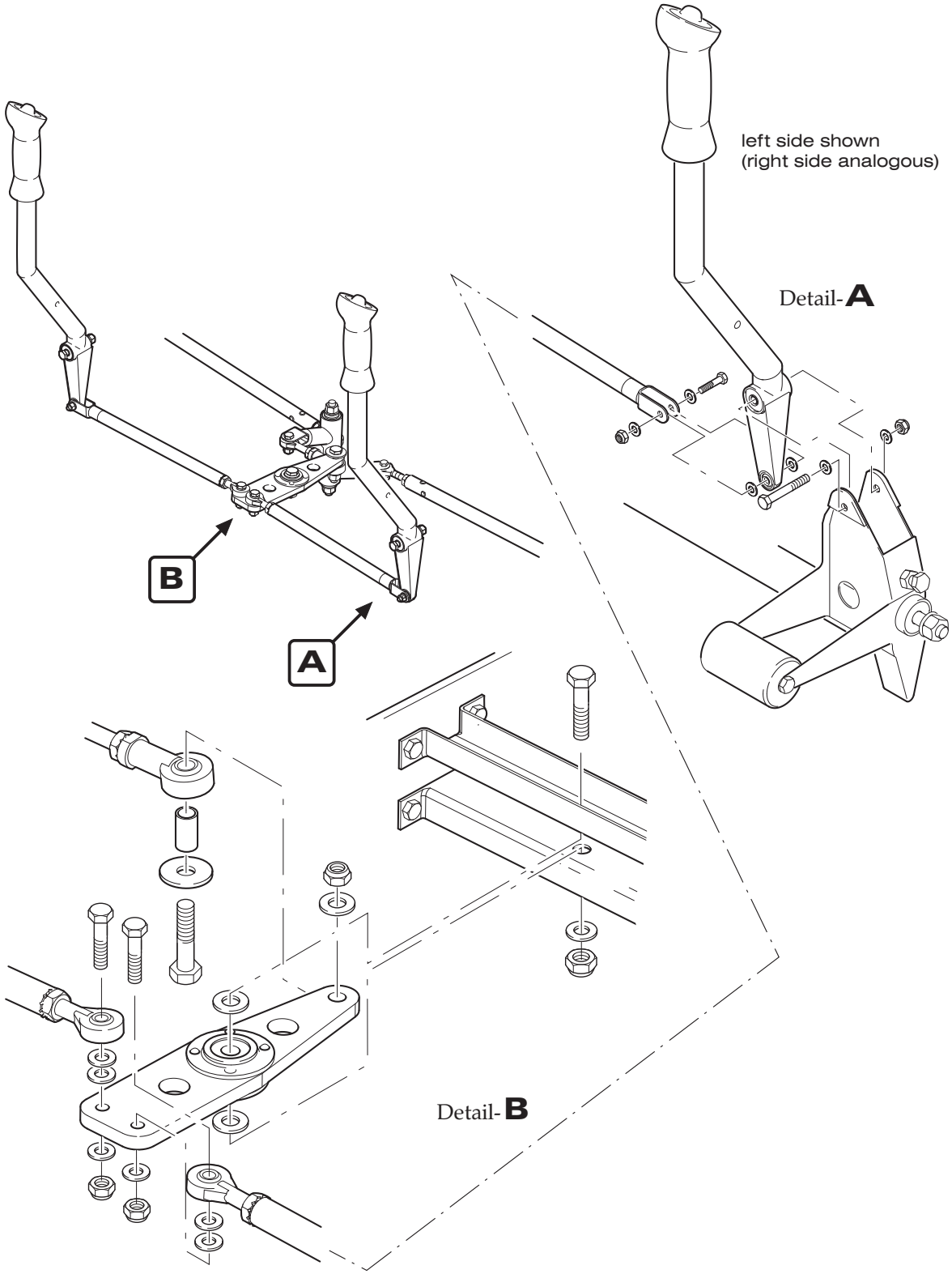


Component Installation
Figure 201

B. Install Front Bellcrank
   (1) Position front bellcrank between brackets and secure using bolt, washer and nut.
   (2) Connect pushrods to front bellcrank.
   (3) Perform aileron control system inspection/check (refer to “Inspection/Check” below).
   (4) Install access plate 210 AB (refer to 06-30).
   (5) Install access panel 211 HL and 211 HR (refer to 25-12).

5. Pushrod 2 Removal/Installation

A. Remove Pushrod 2
   (1) Remove access plate 210 AB (refer to 06-30).
   (2) Disconnect pushrod at front bellcrank.
   (3) Disconnect pushrod at rear bell crank and remove pushrod.

B. Install Pushrod 2
   (1) Connect pushrod to front bellcrank and rear bellcrank.
   (2) Perform aileron control system inspection/check (refer to “Inspection/Check” below).
   (3) Install access plate 210 AB (refer to 06-30).

6. Rear Bellcrank Removal/Installation

A. Remove Rear Bellcrank
   (1) Remove access plate 210 AB (refer to 06-30).
   (2) Disconnect pushrods at rear bellcrank.
   (3) Remove nuts, washers and bellcrank axle securing bellcrank to bellcrank brackets and remove bellcrank.

B. Install Rear Bellcrank
   (1) Position rear bellcrank between brackets and secure using axle, washers and nuts.
   (2) Attach pushrods to rear bellcrank.
   (3) Perform aileron control system inspection/check (refer to “Inspection/Check” below).
   (4) Install access plate 210 AB (refer to 06-30).

7. Pushrod 3 Removal/Installation

A. Remove Pushrod 3
   (1) Remove access plate 210 AB (refer to 06-30).
   (2) Disconnect pushrod at rear bellcrank.
   (3) Disconnect pushrod at pushrod 4.

B. Install Pushrod 3
   (1) Connect pushrod to rear bellcrank and pushrod 4.
   (2) Perform aileron control system inspection/check (refer to “Inspection/Check” below).
   (3) Install access plate 210 AB (refer to 06-30).

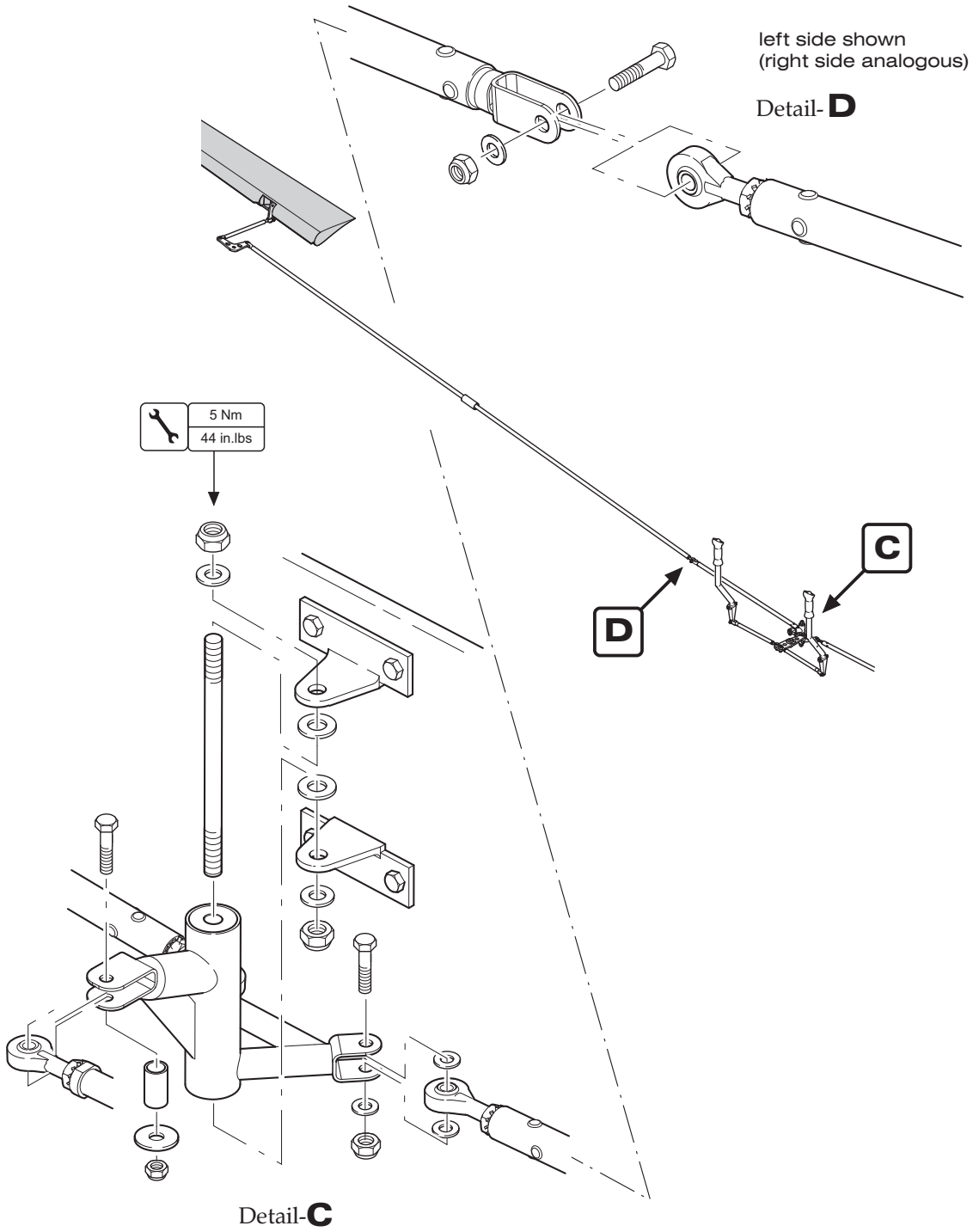


Component Installation
Figure 202

8. Pushrod 4 Removal/Installation

A. Remove Pushrod 4
(1) Remove wing (refer to 57-10).
(2) Open access panel 520 (620) AB (refer to 06-30).
(3) Disconnect pushrod at aileron bellcrank.
(4) Remove rod end bearing.
(5) Cautiously withdraw pushrod from wing.

B. Install Pushrod 4
(1) Position pushrod into the wing.
(2) Install rod end bearing.
(3) Attach pushrod to aileron bellcrank.
(4) Install wing (refer to 57-10).
(5) Connect pushrod 4 to pushrod 3.
(6) Re-rig aileron control system (refer to "Adjustment/Test" below).
(7) Perform aileron control system inspection/check (refer to "Inspection/Check" below).
(8) Close access panel 520 (620) AB (refer to 06-30).

9. Aileron Bellcrank Removal/Installation

A. Remove Aileron Bellcrank
(1) Open access plate 520 (620) AB (refer to 06-30).
(2) Disconnect pushrods at aileron bellcrank.
(3) Remove pivot bolt securing bellcrank to bellcrank bracket assembly. Remove bellcrank and washers through access plate.

B. Install Aileron Bellcrank
(1) Attach bellcrank to structure using pivot bolt, ensuring required washers are in place. Torque nuts to 5 Nm (44 in.lbs).
(2) Reconnect aileron pushrod to bellcrank.
(4) Reconnect pushrod 4 to the bellcrank.
(5) Perform aileron control system inspection/check (refer to "Inspection/Check" below).
(6) Close inspection/access plate 520 (620) AB (refer to 06-30).

10. Inspection/Check

A. Inspection/Check
(1) Perform a visual inspection of the aileron control system. Check all components for proper installation and security. No signs of excessive play.

NOTE: The maximum permissible value of aileron play at the hinge pins is 1,0 mm (0.04 in.) axial play and 0,3 mm (0.01 in.) radial play. The maximum control circuit backlash is 10 mm (0.4 in.).
In case of excessive play of the control surfaces in their hinges, replace worn hinge bushings (refer also to 57-50).

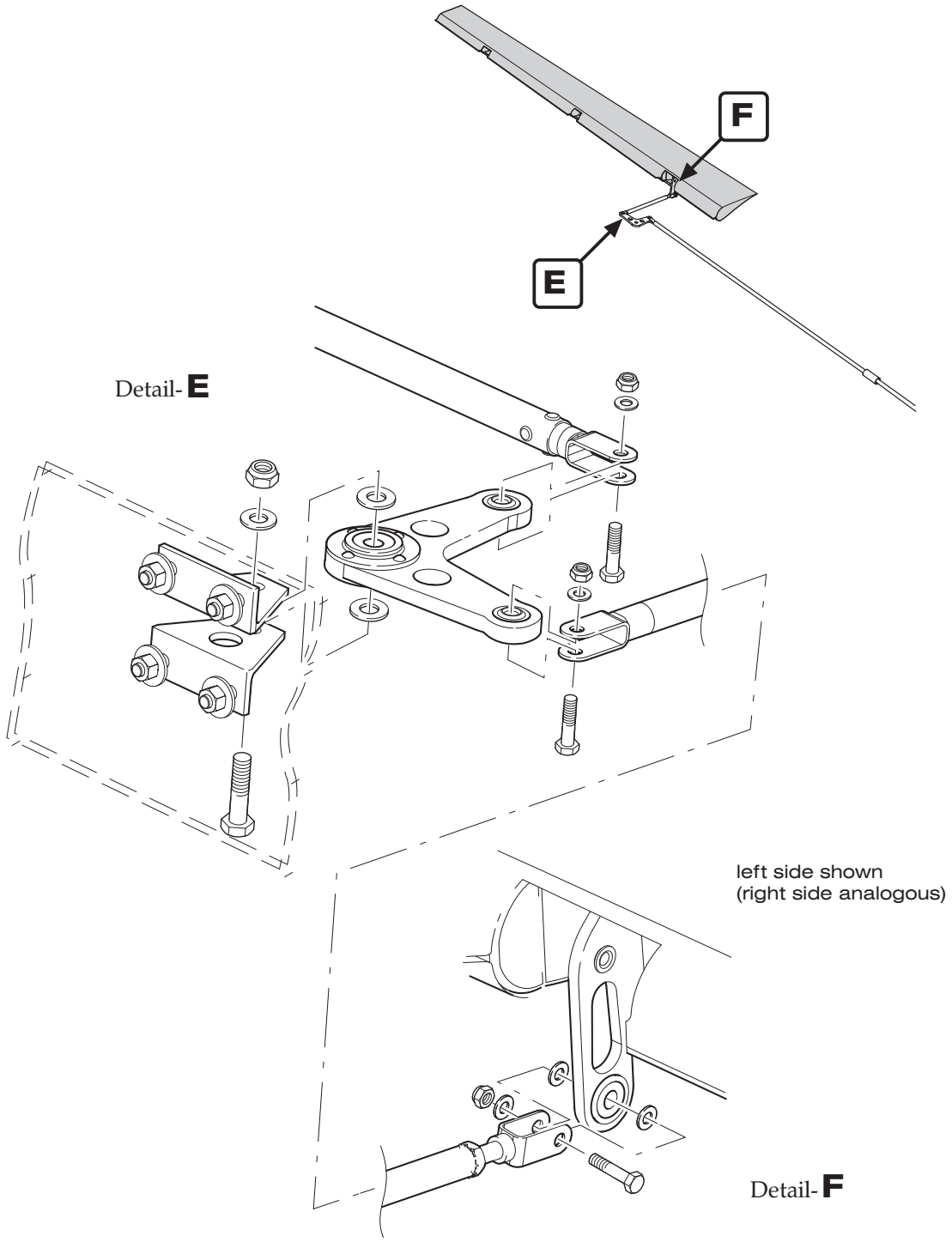


Aileron Bellcrank Installation
Figure 203

(2) Verify minimum rod end thread engagement of 8 mm (0.312 in.).
(3) Verify ailerons can be moved smoothly through the full travel. No grinding is audible.
(4) Check ailerons for correct travel using an inclinometer. If necessary perform aileron control system adjustment/test (refer to "Adjustment/Test" below).

NOTE: For aileron rigging specifications, refer to chapter 6 „Dimensions and Areas".

(5) Install all items removed for access.

11. Adjustment/Test

A. Adjustment/Test
(1) Remove access plate 210 AB (refer to 06-30).
(2) Remove access plate 620 AB and 520 AB (refer to 06-30).
(3) Remove access plate 211 HL and HR (refer to 06-30).
(4) Adjust pushrod 2 until:
(a) front and rear bellcrank are parallel to each other.
(b) both bellcranks are perpendicular to the wing spar.
(5) Fix bellcranks in a suitable manner.
(6) Adjust pushrod 3 for each aileron so the aileron bellcrank is in neutral position (line between bellcrank pivot bolt and aileron pushrod attach bolt is parallel to the wing spar).
(7) Adjust each aileron pushrod until the control surface is neutral with reference to wing trailing edge.
(8) Adjust pushrod 1 for each control stick until the control stick is in neutral position.
(9) Set free the front and rear bellcrank.
(10) Fasten inclinometer to left aileron and set at 0°.
(11) Adjust aileron stop bolts at control yoke assembly to allow up and down aileron travel specified in 06-10.
(12) Perform an aileron control system inspection/check (refer to "Inspection/Check" above).
(13) Install all items removed for access.

# RUDDER CONTROL SYSTEM - DESCRIPTION

1. Introduction

   A. This section describes that portion of the flight control system which controls the position and movement of the rudder. The rigging procedure for the rudder control system is also provided. The rudder control system consists of conventional rudder pedals, cables and pulleys.

2. Description and Operation

   A. For rudder control system design and function refer to figure 1.

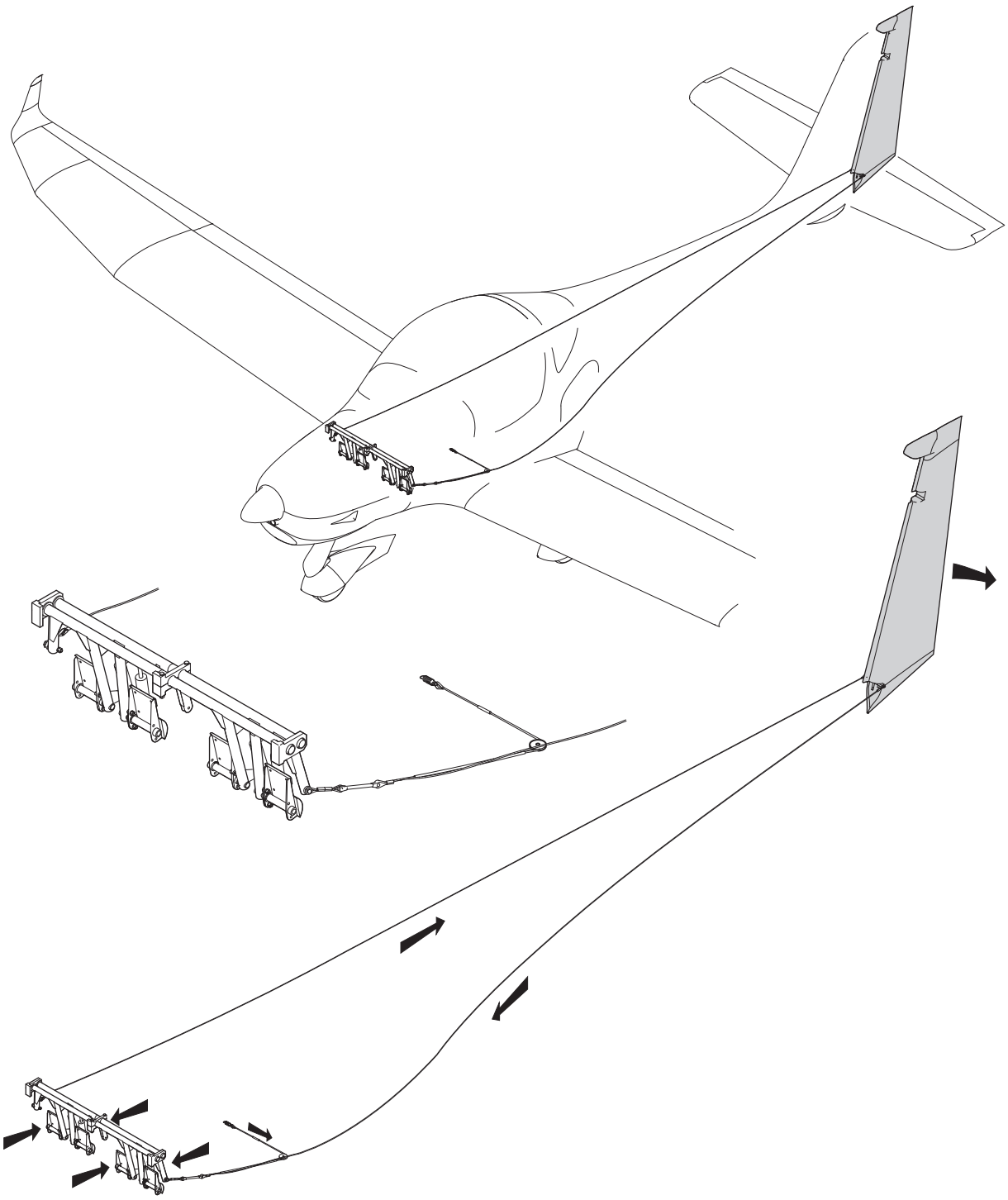

Rudder Control Design and Function
Figure 1

## RUDDER CONTROL SYSTEM - MAINTENANCE

WARNING: WHEN INSTALLING COMPONENTS OF THE CONTROL SYSTEM, NEW SELF-LOCKING NUTS SHOULD ALWAYS BE USED. NEVER USE A SELF-LOCKING NUT MORE THAN ONCE.

A SYSTEM RIGGING AND INSPECTION/CHECK MUST BE PERFORMED AFTER LOOSENING ANY FLIGHT CONTROL CABLE TO ENSURE PROPER CONTROL SURFACE OPERATION.

1. General

   A. For a breakdown of the components, refer to figure 201 and 202.

2. Control Cables

   A. The maintenance of the control cables is important for the precise and safe functioning of the rudder control system. Control cables should be regularly checked for mechanical damage and damage caused by corrosion.

      (1) Broken Wire Check
      Check cables for broken strands of wire by passing a cloth along length of cable. The cloth will snag at such places. If broken wires are found, the affected control cable must be examined in more detail and removed if necessary. If a broken single wire is found, the control cable must be replaced. The procedures for control cable removal and installation are described below.

      (2) Corrosion Check
      External corrosion can be detected by a careful visual examination of the cables. Finding internal corrosion is more difficult. If internal corrosion is suspected, remove cable from the aircraft and examine more closely, especially in areas with broken wires.

3. Rudder Pedal Assembly Removal/Installation

   A. Remove Rudder Pedal Assembly
      (1) Slacken control cables of rudder control.
      (2) Disconnect control cables from rudder control actuator arms.
      (4) Disconnect brake master cylinders at rudder pedal assembly.
      (5) Disconnect steering tubes at rudder bars.
      (6) Remove bolts securing lower half of the middle bearing block to upper half and remove lower bearing block half.
      (7) Remove bolts attaching left and right bearing blocks to firewall and work rudder bars out of area below instrument panel.

   B. Install Rudder Pedal Assembly
      (1) Position rudder bars in left and right bearing blocks and secure bearing blocks to firewall using bolts.

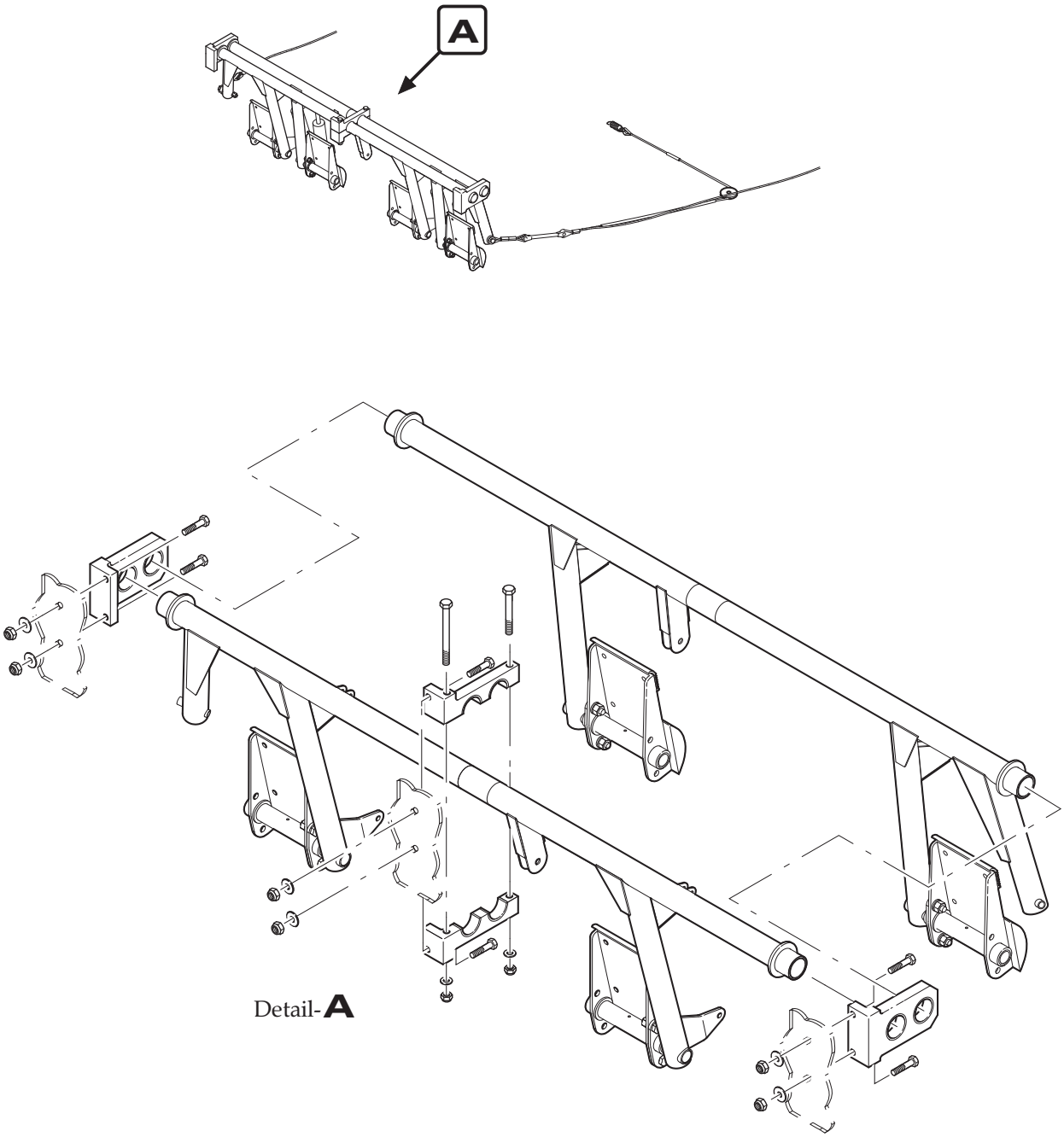


Rudder Control Installation
Figure 201

(2) Reinstall lower half of middle bearing block.
(3) Reconnect steering tubes to rudder bars.
(4) Reconnect master cylinders to the rudder pedal assembly.
(5) Reconnect control cables to rudder control actuator arms and re-rig system (refer to "Adjustment/Test" below).
(6) Check correct operation of the rudder control system (refer to "Inspection/Check" below).

4. Control Cable Removal/Installation

A. Remove a Control Cable
(1) Relieve cable tension at turnbuckle.
(2) Disconnect control cable at the turnbuckle.
(3) Disconnect control cable at the rudder.
(4) Cut the eye-end from the control cable which is to be removed at the turnbuckle end.
(5) Withdraw control cable from the aircraft.

B. Install a Control Cable

WARNING: THE CONTROL CABLE EYE-ENDS SHOULD BE INSTALLED BY TRAINED AND AUTHORIZED PERSONNEL ONLY. IF THE EYE-ENDS ARE NOT INSTALLED PROPERLY; A RUDDER CONTROL SYSTEM FAILURE MAY OCCUR.
USE CABLES TO SPECIFICATION LN9374 OR ISO 2020 OR MIL-DTL-83420, STRECHED TO 60% MBS (DIAMETER 3,2 MM [1/8 IN.]).

(1) Prepare a new control cable with the required length and one eye-end.
(2) Push that control cable through the tube from the rudder side.
(3) Install the second eye-end at the turnbuckle end.
(4) Reconnect the control cable to the rudder using bolt, washer and nut.
(5) Reconnect the control cable to the turnbuckle using bolt , washer and nut.
(6) Rig rudder control cable including cables of the aileron-rudder interconnect and check correct operation of rudder control system / aileron-rudder interconnect (refer to "Adjustment/Test" and "Inspection/Check" below).

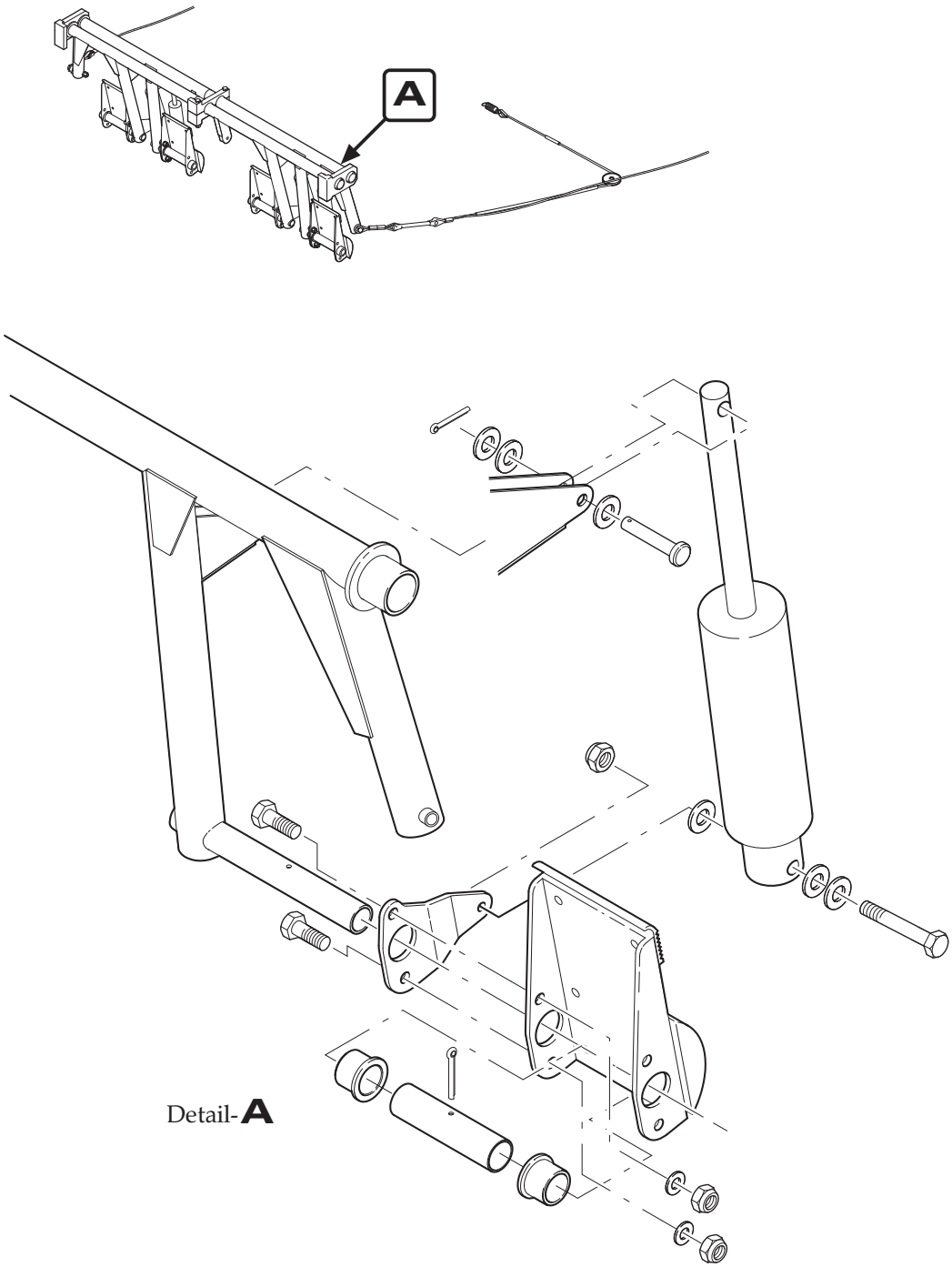


Rudder Pedal / Master Cylinder Installation
Figure 202

5. Inspection/Check

A. Inspection/Check

(1) Perform a visual inspection of the rudder control system. Check all components for proper installation and security. No signs of excessive play.

NOTE: The maximum permissible value of rudder play at hinge pins is 1,0 mm (0.04 in.) axial play and 0,3 mm (0.01 in.) radial play.
In case of excessive play of the control surface in its hinges, replace worn hinge bushings (refer also to 57-50).

(2) Examine control cables for broken wires and corrosion.
(3) Verify rudder can be moved smoothly through full travel. No grinding is audible.
(4) Check rudder for correct travel using an inclinometer, if necessary perform rudder control system adjustment/test (refer to "Adjustment/Test" below).

NOTE: For rudder rigging specifications, refer to chapter 6 "Dimensions and Areas".

(5) Install all items removed for access.

6. Adjustment/Test

A. Adjustment/Test

(1) Remove engine cowling (refer to 71-10).
(2) Slacken control cables of rudder control.
(3) Tie down or weight tail to raise nose wheel off the ground.
(4) Set the rudder pedals to neutral and fix in suitable manner.
(5) Fix the rudder in neutral position with reference to vertical stabilizer.
(6) Tension the control cables with the turnbuckles until the control system is free of clearance at room temperature.
(7) Adjust nose wheel steering tubes so the nose wheel is streamlined.
(8) Set the rudder control system free.
(9) Adjust secondary stops on the nose wheel strut so that for full right and left rudder deflection:
  (a) the rudder stops contact before secondary stops.
  (b) secondary stops show a 0,5 mm (0.02 in.) gap between stop bolt and nose wheel assembly.
(10) Tighten jam nuts.
(11) Verify rudder pedals are free for the full range of movement.
(12) Perform a rudder control system inspection/check (refer to "Inspection/Check" above).
(13) Install engine cowling (refer to 71-10) and lower nose wheel.

# ELEVATOR CONTROL SYSTEM - DESCRIPTION

1. Introduction

   A. This section describes that portion of the flight control system which controls the position and movement of the elevator. The rigging procedure for the elevator control system is also provided. The system consists of control sticks, elevator torque tube assembly, pushrods and the elevator bellcrank.
   The aircraft is equipped with an electrical spring-force elevator trim system.

2. Description and Operation

   A. For elevator control system design and function refer to figure 1.

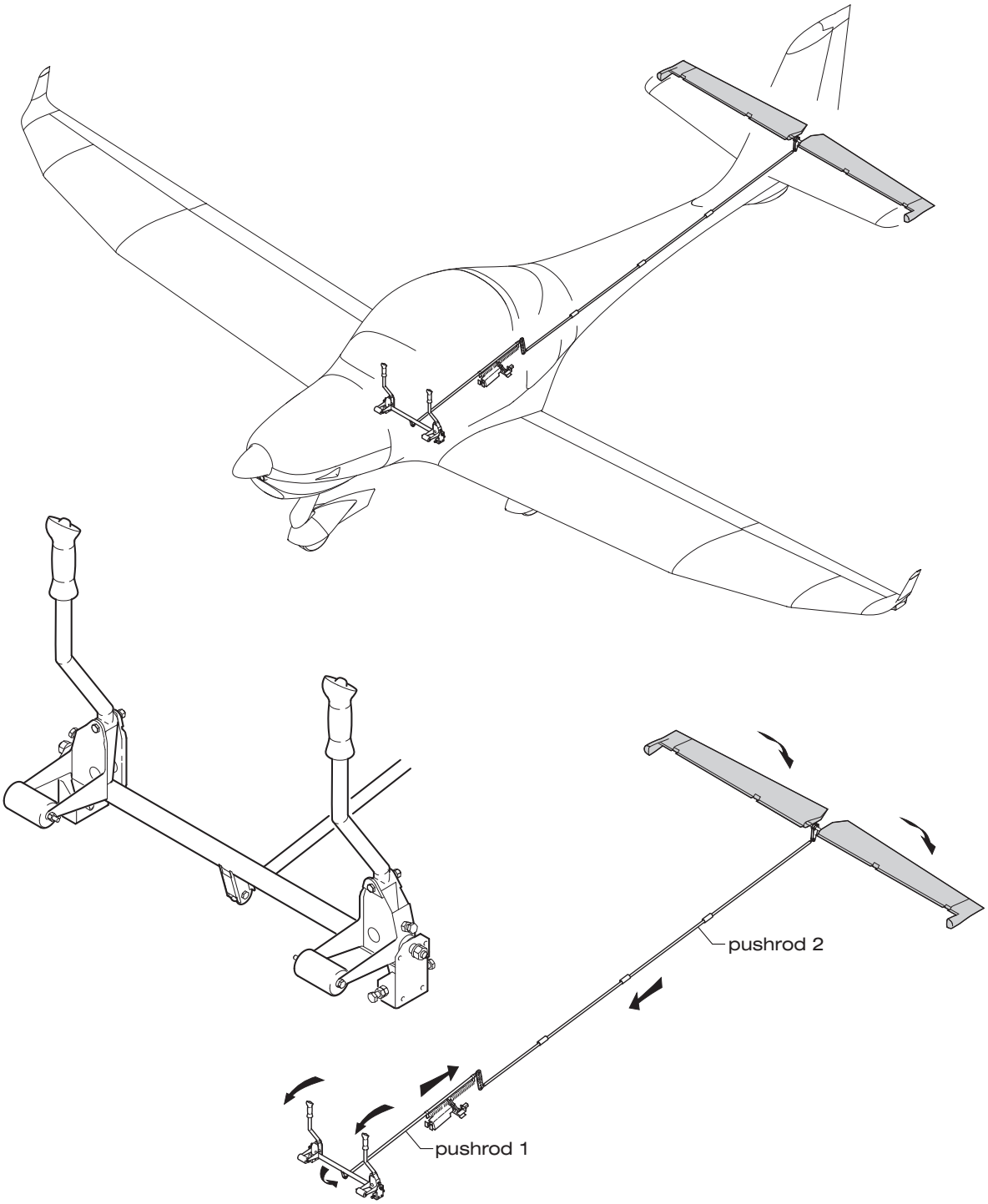


Elevator Control System Design and Function
Figure 1

## ELEVATOR CONTROL SYSTEM - MAINTENANCE

WARNING: WHEN INSTALLING COMPONENTS OF THE CONTROL SYSTEM NEW SELF-LOCKING NUTS SHOULD ALWAYS BE USED. NEVER USE A SELF-LOCKING NUT MORE THAN ONCE.

1. General

   A. For a breakdown of the components, refer to figure 201 and 202.

2. Elevator Torque Tube Assy Removal/Installation

   A. Remove Elevator Torque Tube Assy
      (1) Remove seats (refer to 25-10).
      (2) Remove control sticks (refer to 27-10).
      (3) Disconnect pushrod 1 from elevator actuation arm.
      (4) Remove pivot bolt, washers and nut from both ends of the torque tube with which the torque tube is attached to the support bracket.
      (5) Remove torque tube from aircraft.

   B. Install Elevator Torque Tube Assy
      (1) Position torque tube between support brackets.
      (2) Attach pivot bolt, washers and nut to both ends of the torque tube with which the torque tube is attached to the support bracket.
      (3) Connect pushrod 1 to elevator actuation arm.
      (4) Install control sticks (refer to 27-10).
      (5) Check elevator and aileron control for proper operation and rig if necessary (refer to “Aileron Control System Maintenance“ and „Adjustment/Test“ below).

3. Pushrod 1 Removal/Installation

   A. Remove Pushrod 1
      (1) Remove seats (refer to 25-10).
      (2) Remove baggage compartment floor panel (refer to 25-12).
      (3) Disconnect trim system springs from pushrod.
      (4) Disconnect pushrod at elevator actuation arm.
      (5) Disconnect pushrod at elevator bellcrank.
      (6) Remove pushrod from aircraft.

   B. Install Pushrod 1
      (1) Position pushrod and connect to elevator bellcrank.
      (2) Connect pushrod to elevator actuation arm.
      (3) Connect springs of trim system to pushrod.

      NOTE: If spring attachment clamps have been removed, refer to 27-31 for their correct position.

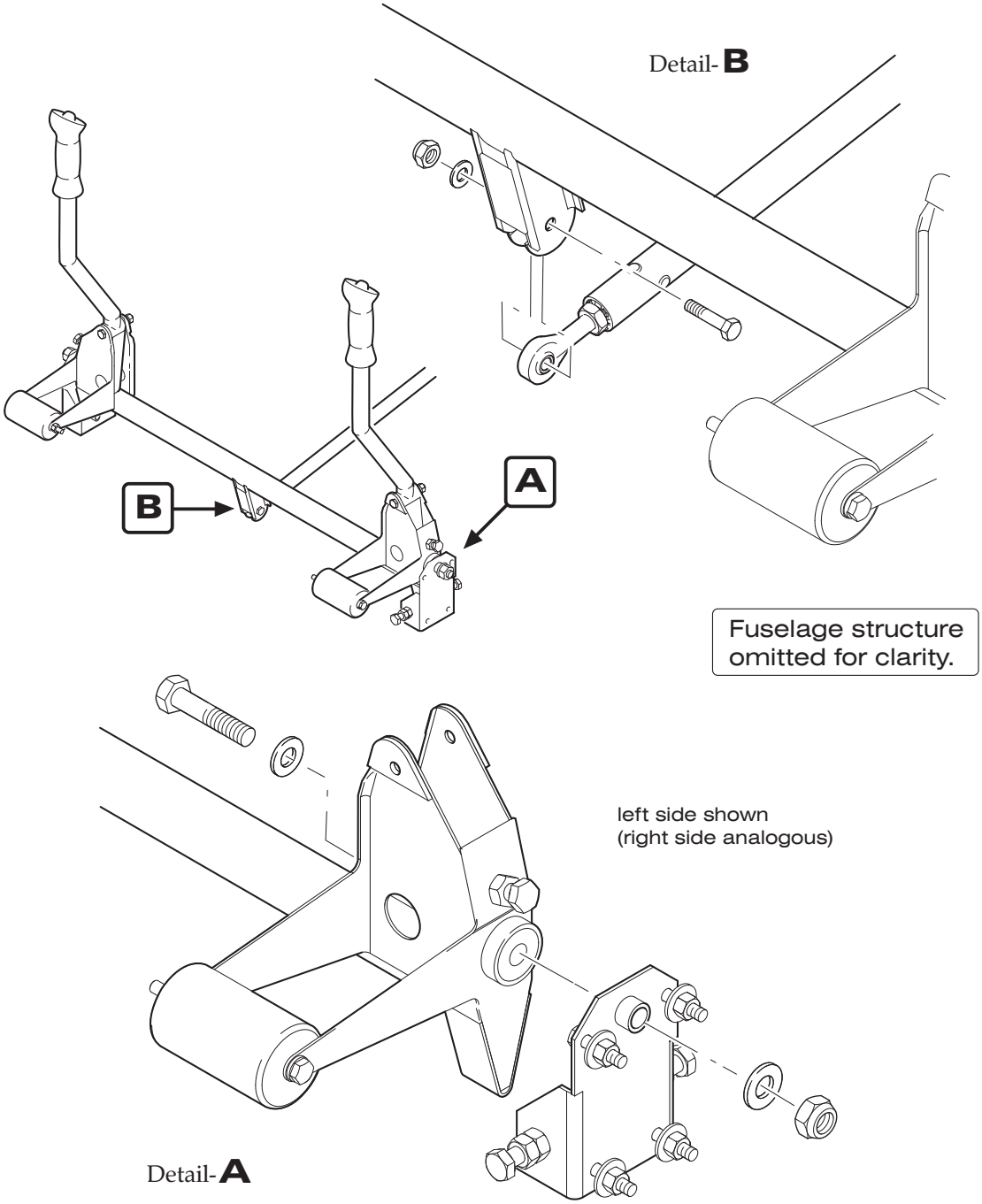


Component Installation
Figure 201

(4) Check elevator control system and elevator trim system for proper operation and rig if necessary (refer to 27-30 and 27-31).
(5) Install baggage compartment floor panel (refer to 25-12).
(6) Install seats (refer to 25-10).

4. Elevator Bellcrank Removal/Installation

A. Remove Elevator Bellcrank
(1) Remove baggage compartment floor panel (refer to 25-12).
(2) Disconnect pushrods from elevator bellcrank.
(3) Remove pivot bolt securing elevator bellcrank to support brackets.
(4) Remove elevator bellcrank.

B. Install Elevator Bellcrank
(1) Mount bellcrank to structure using pivot bolt, nut and washer. Ensure spacers are placed correctly.
(2) Reconnect pushrods to bellcrank.
(3) Check elevator control system and elevator trim system for proper operation and rig if necessary (refer to 27-30 and 27-31).
(4) Install baggage compartment floor panel (refer to 25-12).

5. Inspection/Check

A. Inspection/Check
(1) Perform a visual inspection of elevator control system. Check all components for proper installation and security. No signs off excessive play.

NOTE: The maximum permissible value of elevator play at hinge pins is 1,0 mm (0.04 in.) axial play and 0,3 mm (0.01 in.) radial play. The maximum control circuit backlash is 10 mm (0.4 in.).
In case of excessive play of the control surfaces in their hinges, replace worn hinge bushings (refer also to 57-50).

(2) Verify minimum rod end thread engagement of 8 mm (0.312 in.).
(3) Verify elevator can be moved smoothly through full travel. No grinding is audible.
(4) Verify both sticks are free for the full range of movement and maximum up and down elevator travel is achieved.
(5) Check elevator for correct travel using an inclinometer, if necessary perform elevator control system adjustment/test (refer to “Adjustment/Test” below).

NOTE: For elevator rigging specifications, refer to chapter 6 “Dimensions and Areas“.

(6) Install all items removed for access.

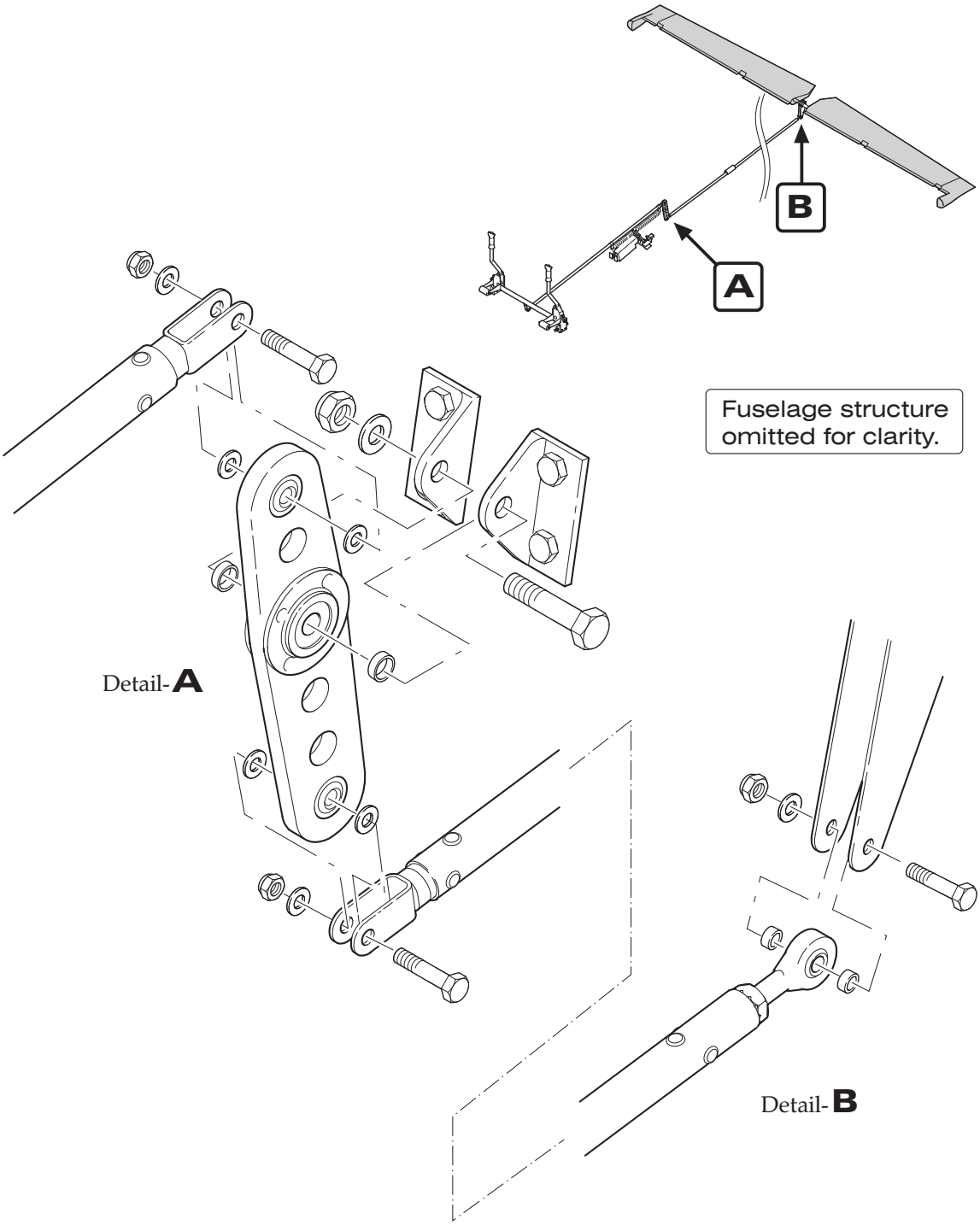


Component Installation
Figure 202

6. Adjustment/Test

A. Adjustment/Test

(1) Remove baggage compartment floor panel (refer to 25-12).
(2) Remove access plate 211 HL and HR (refer to 25-12).
(3) Lock elevator bellcrank in neutral position in a suitable manner (the line between pushrod attach points on bellcrank is perpendicular to the pushrod 2).
(4) Streamline elevator to neutral with horizontal stabilizer by adjusting elevator pushrod (pushrod 2).
(5) Adjust pushrod 1 until the control yoke assembly is in neutral position.

NOTE: For elevator rigging specifications, refer to Chapter 6, „Dimensions and Areas“.

(6) Mount an inclinometer on elevator and set to 0°.
(7) Unlock the elevator control system at elevator bellcrank.
(8) Adjust travel stop bolts at control yoke mounts to allow up and down elevator travel specified in 06-10.
(9) Tighten jam nuts.
(10) Install all items removed for access.

## ELEVATOR TRIM CONTROL - DESCRIPTION

1. Introduction

   A. The aircraft isequipped with an electrical spring-force trim system. An electrical trim actuator changes the pre-load of a pair of springs that applies a defined force to the elevator pushrod.

2. Description and Operation

   A. For an illustration of elevator trim control design and function refer to figure 1.

   B. The trim system is controlled by a rocker switch located on the rear portion of the middle console. Pressing the forward side of the switch will trim nose down; pressing the rear side of the switch will trim nose up.
   The switch operates an electrical trim actuator that is mounted under the baggage compartment floor panel, parallel to the elevator pushrod.
   The electrical circuit of the trim system is protected by a circuit breaker that can be pulled in the event of a trim system malfunction.

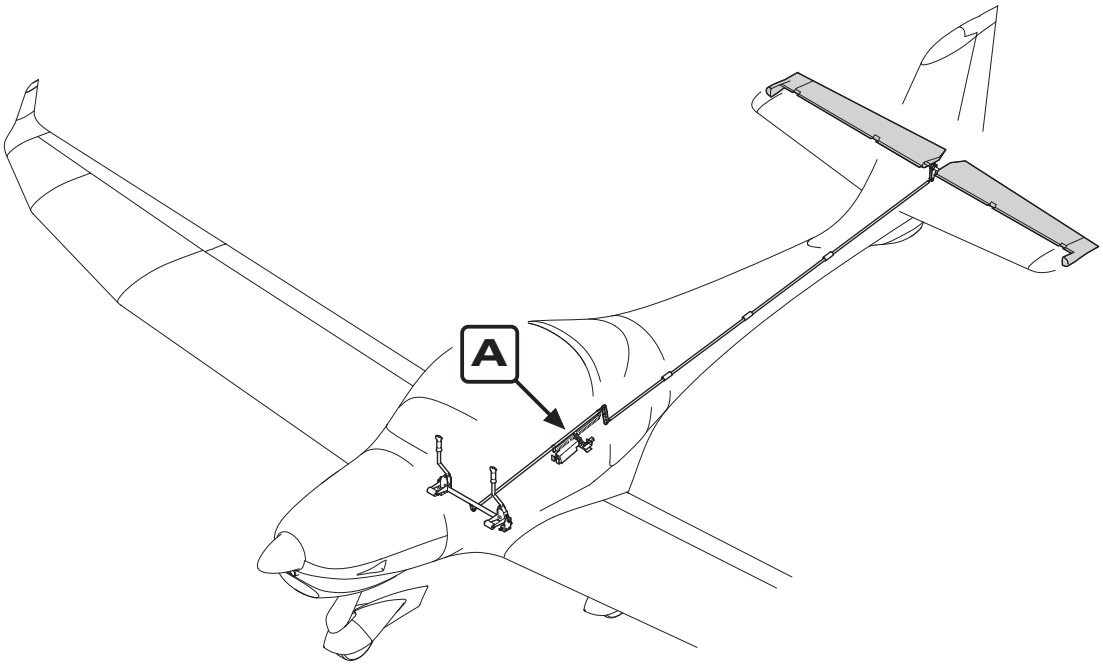


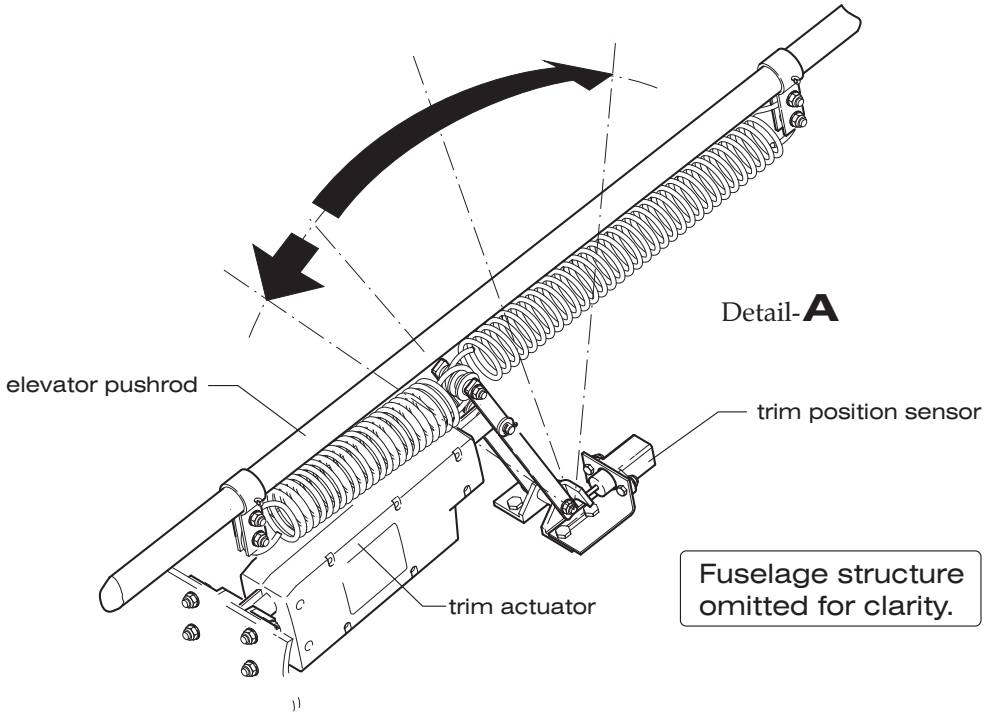


Elevator Trim System Design and Function
Figure 1

## ELEVATOR TRIM CONTROL - MAINTENANCE

1. General

   A. For a breakdown of the components, refer to figure 201.

2. Trim Actuator Removal/Installation

   A. Remove Trim Actuator
      (1) Set the elevator trim system to neutral.
      (2) Ensure electrical power to aircraft is OFF.
      (3) Remove baggage compartment floor panel (refer to 25-12).
      (4) Disconnect trim actuator electrical wires at connector.
      (5) Disconnect the springs at trim system actuation arm.
      (6) Disconnect trim actuator push rod at trim system actuation arm.
      (7) Remove bolts securing trim actuator to fuselage structure and remove trim actuator.

   B. Install Trim Actuator
      (1) Attach trim actuator to fuselage structure with bolts, washers and nuts.
      (2) Reconnect trim actuator push rod to trim system actuation arm using hardware.
      (3) Reconnect springs to trim system actuation arm.

      NOTE: There are two different types of springs used in the trim system. The spring on the forward side is black colored, the spring on the rear side is silver colored.

      (4) Connect trim actuator electrical connection.
      (5) Check elevator trim control for proper function (refer to "Inspection/Check" below).
      (6) Install baggage compartment floor panel (refer to 25-12).

3. Inspection/Check

   A. Inspection/Check
      (1) Perform a visual inspection of elevator trim system. Check all components for proper installation and security. No signs off excessive play.
      (2) Verify distance between rear edge of rear pipe bracket (securing rear spring to elevator pushrod) and connecting bore of rear fork head. Nominal value: 55 ± 2 mm (2.17 ± 0.08 in.)
      (3) Place BAT switch in ON position.
      (4) Keep hands away from control stick and run trim actuator to full nose-down trim position until travel is stopped by limit switch.
      (5) Check forward movement of the control stick. Verify proper trim position indicator reading.
      (6) With full nose-down trim: Measure control force by means of a spring balance. Attach balance n upper third of grip piece and pull rearward until control stick moves from stop. Control force nominal value: 40 ± 5 N (9 ± 1.1 lbs)
      (7) Keep hands away from control stick and run trim actuator to full nose-up trim position until travel is stopped by limit switch.
      (8) Check backward movement of the control stick. Verify proper trim position indicator reading.
      (9) Set the elevator trim to neutral and place BAT switch in OFF position.
      (10) Install all items removed for access.

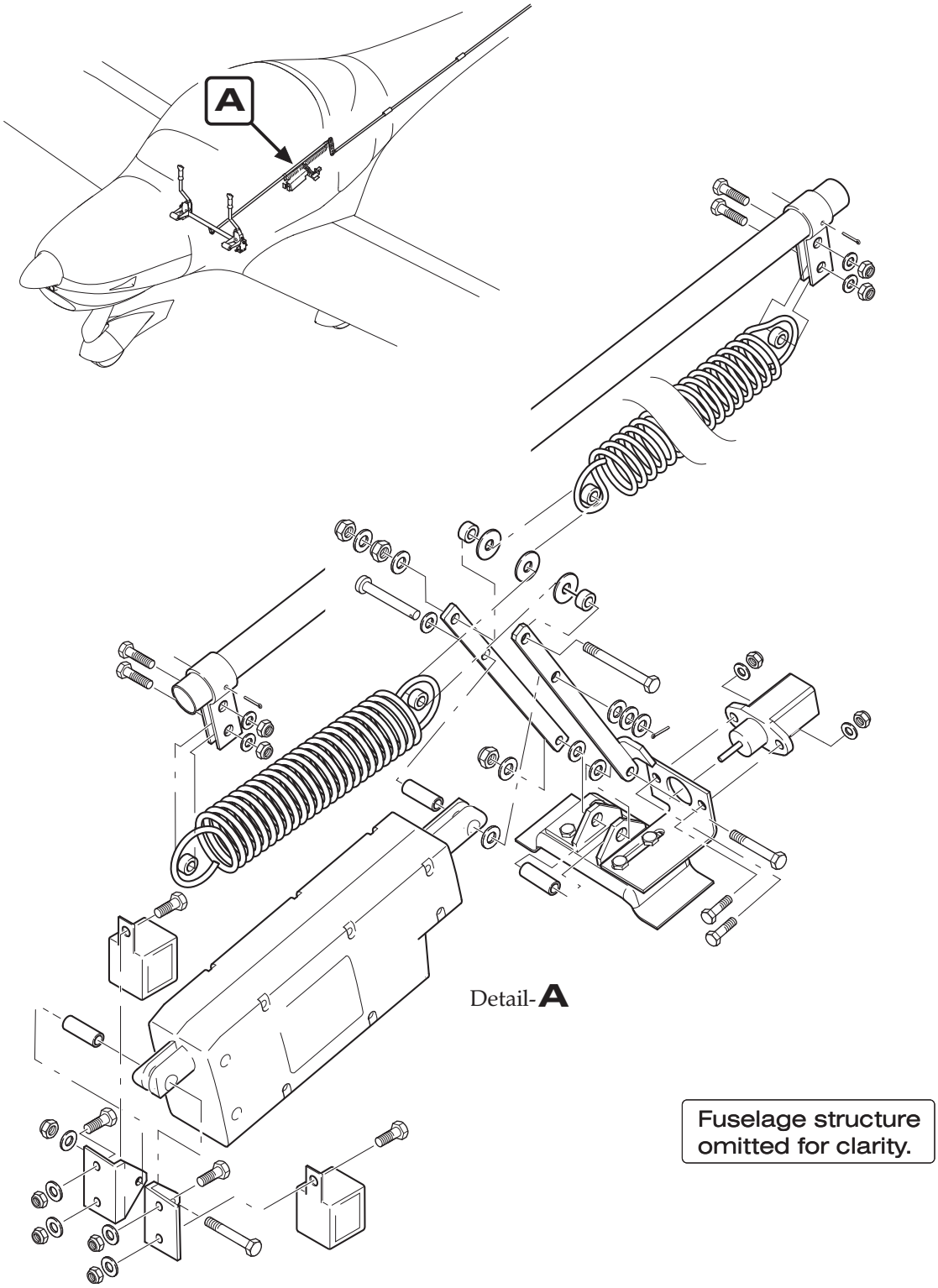


Elevator Trim System Installation
Figure 201

# FLAP CONTROL SYSTEM - DESCRIPTION

1. Introduction

   A. This section describes that portion of the flight control system which controls the position and movement of the flaps. The rigging procedure forthe flap control system is also provided.
   The aircraft is equipped with electrically actuated flaps. They are operated and fixed in the desired position by an electrical flap actuator.

2. Description and Operation

   A. The wing flaps system consists of a three-position selector switch which is incorporated in the instrument panel, a LED flap position indicator near the three-position selector switch, the electric flap actuator, located under the baggage floor, a torque tube, pushrods and the flaps on each wing.

   B. The linear flap actuator drives the torque tube interconnected between the left and right flaps. Limit switches are attached to the flap actuator. They identify flap position and surface travel, and turn off the actuator once the desired position is reached, i.e: 17° or 35°.
   The flap actuator has a slip coupling to prevent mechanical damage if a restriction occurs. In the event of a failure in the electric flap control circuit, torque tube/actuator geometry prevents the flaps from causing an uncontrollable flight condition.

   C. For an illustration of flap control system design and function refer to figure 1.

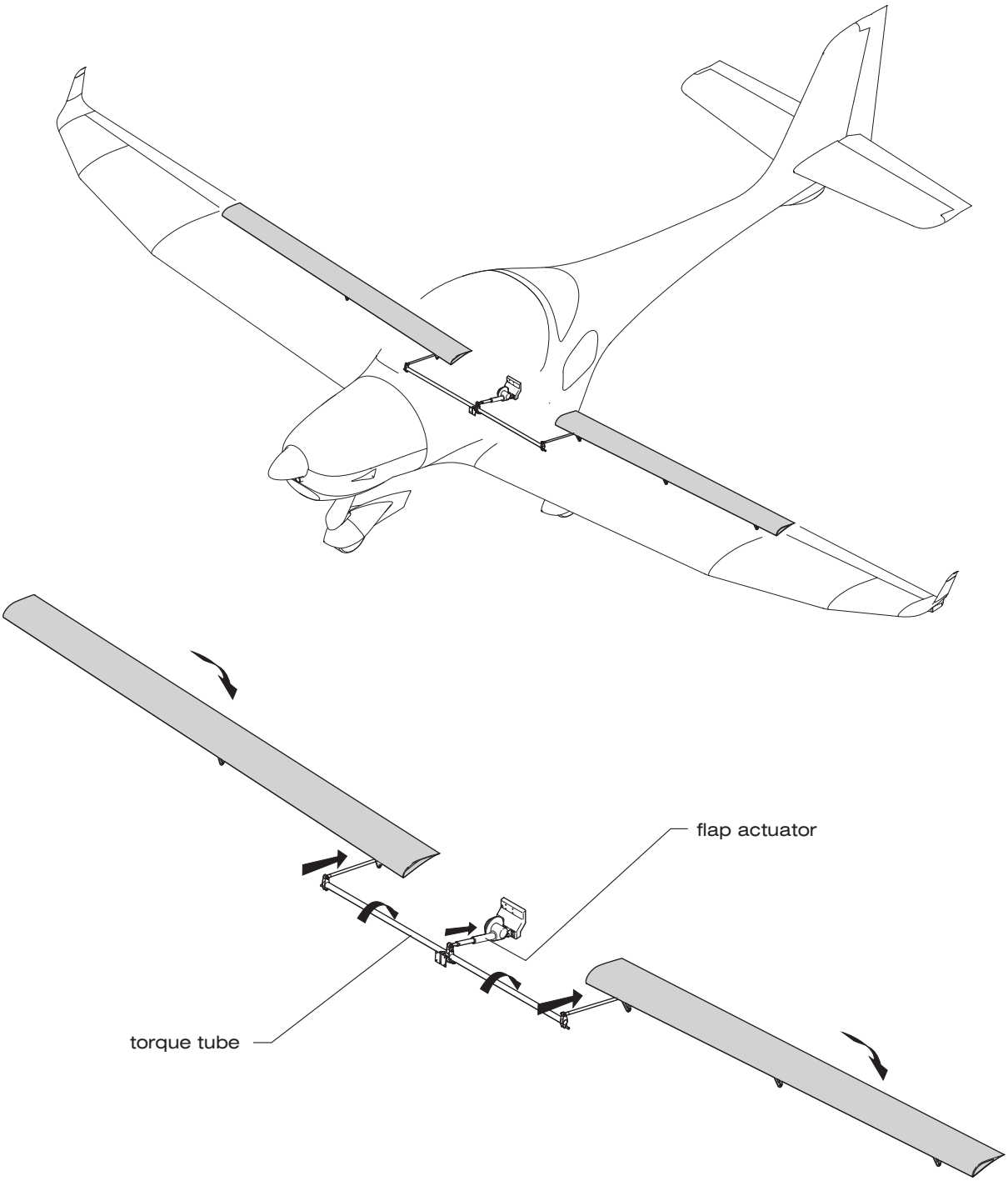


Flap Control System Design and Function
Figure 1

## FLAP CONTROL SYSTEM - MAINTENANCE

1. General

A. This section provides instructions for removal and installation of components and instruction for flap control system rigging.

B. For a breakdown of the components, refer to figure 201, 202, 203, and 204.

2. Flap Actuator Assembly Removal/Installation

A. Remove Flap Actuator Assembly
(1) Ensure electrical power to aircraft is OFF.
(2) Remove baggage compartment floor panel (refer to 25-12).
(3) Disconnect flap actuator electrical wires at connector.
(4) Disconnect flap actuator from torque tube coupler.
(5) Remove nut, bolt and washers securing the flap actuator assembly to the actuator bracket and remove flap actuator assembly from aircraft.

B. Install Flap Actuator Assembly
(1) Place flap actuator assembly in the actuator bracket and attach using washers and bolt.
(2) Attach washers, bolt and nut securing the flap actuator pushrod to the torque tube coupler.
(3) Connect flap actuator electrical wires at connector.
(4) Perform flap control system inspection/check and rig system, if necessary (refer to "Inspection/Test" and "Adjustment/Test" below).
(5) Install baggage compartment floor panel (refer to 25-12).

3. Torque Tube Assembly Removal/Installation

A. Remove Torque Tube Assembly
(1) Remove access plate 210 AB (refer to 06-30).
(2) Remove access plate 610 AB and 510 AB (refer to 06-30).
(3) Disconnect flap pushrod from torque tube assembly at each flap.
(4) Disconnect flap actuator pushrod from torque tube assembly.
(5) Remove bolt connecting torque tube halves.
(6) Remove bolt securing torque tube halves to pivot bracket.
(7) Withdraw right and left torque tube halves from inside the wing.

B. Install Torque Tube Assembly
(1) Position torque tube halves inserting pivot pin located at outer end into the bearing inside the wing.

CAUTION: ENSURE THE LONG EDGE OF THE COUPLER IS FACING TOWARDS THE WING SPAR.

(2) Secure both halves to pivot bracket using bolt, washer and nut.

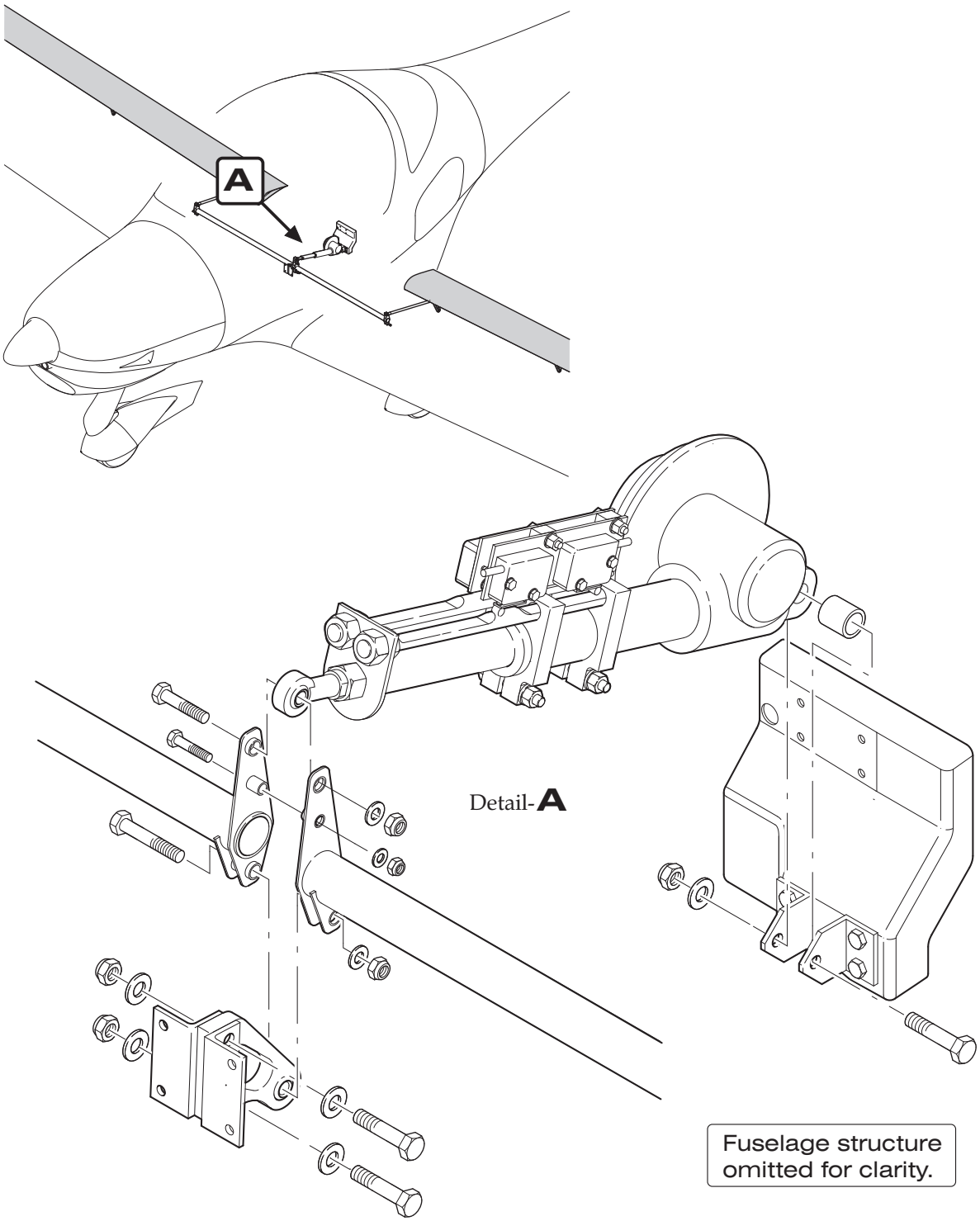


Flap Control System Installation
Figure 201

(3) Install spacer and bolt, washer and nut connecting halves.
(4) Connect torque tube assembly to flap actuator pushrod.
(5) Perform flap control system inspection/check and rig system, if necessary (refer to "Inspection/Check" and "Adjustment/Test" below).

4. Flap Pushrod Removal/Installation

NOTE: Left and right flap pushrod removal/installation is analogous.

A. Remove Flap Pushrod
(1) Remove wing access plate 610 AB (510 AB)(refer to 06-30).

CAUTION! WHEN DISCONNECTING FLAP PUSHROD FROM FLAP HORN, EXERCISE CAUTION TO PREVENT THE FLAP FROM INADVERTENT SWINGING DOWNWARD.

(2) Supporting the flap, disconnect flap pushrod at the flap horn.
(3) Disconnect flap pushrod from torque tube assembly and remove pushrod from wing.

B. Install Flap Pushrod
(1) Position and connect flap pushrod to torque tube assembly.
(2) Connect flap pushrod at flap horn.
(3) Re-rig flap control system and perform inspection/check (refer to "Inspection/Check" and "Adjustment/Test" below).
(4) Install all items removed for access.

5. Inspection/Check

A. Inspection/Check
(1) Prepare inspection.
(a) Remove baggage compartment floor panel.
(b) Remove fuselage access panel 210 AB (refer to 06-30).
(c) Remove access panel 610 AB and 510 AB (refer to 06-30).
(2) Inspect flap control system visually.
(a) Verify proper installation and safetying of all items in the entire flap control system.
(b) Check electrical connections.
(c) Examine limit switches for security and condition.
(d) Verify minimum rod end thread engagement of 8 mm (0.312 in.).
(e) Verify no excessive play of control surfaces at hinge pins. Check the control circuit backlash.

NOTE: The maximum permissible value of control surface play at hinge pins is 1,0 mm (0.04 in.) axial play and 0,3 mm (0.01 in.) radial play. The maximum control circuit backlash is 5 mm (0.2 in.).
In case of excessive play of the control surfaces in their hinges, replace worn hinge bushings (refer also to 57-50).

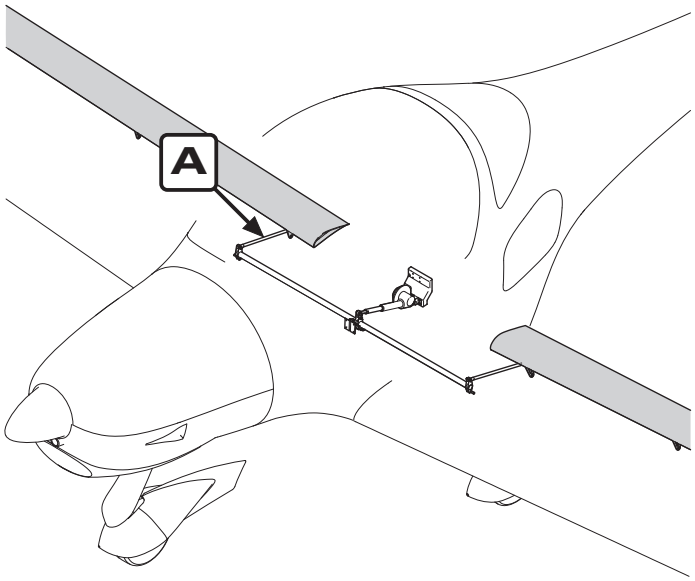


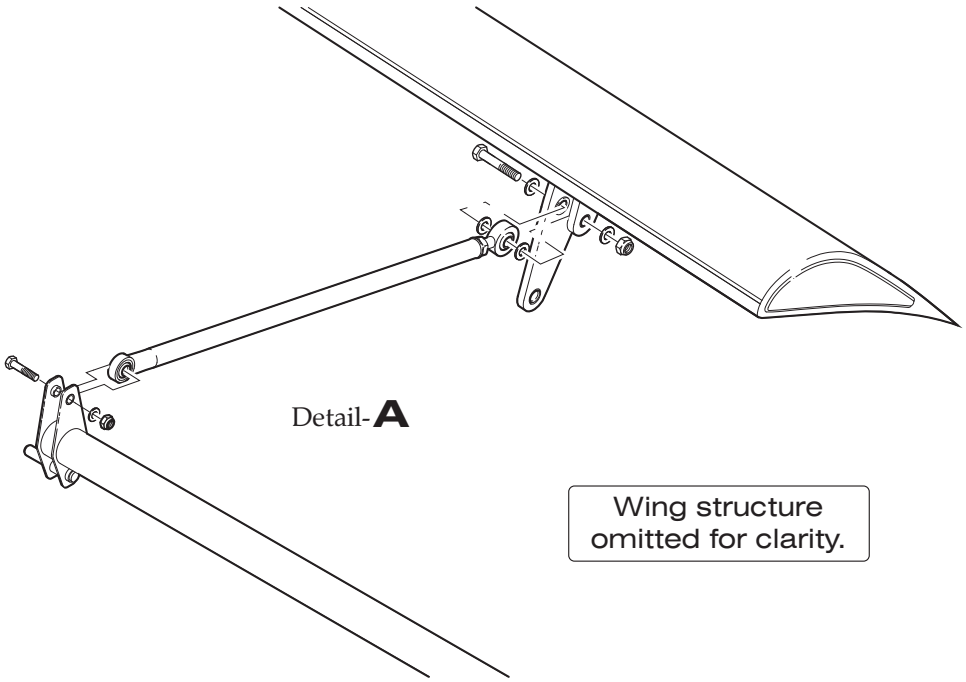


Flap Control System Installation
Figure 201

(3) Perform operational check of the flap control system.
   (a) Operate flaps through their full range of travel, observing for uneven travel or jumpy motion and binding.
   (b) Check correct flap full UP position. Rig if necessary (refer to "Adjustment/Test" below).
   (c) With flap full UP, fasten an inclinometer to inboard side of left flap and set to 0°.
   (d) Lower flap to T/O and then to LDG positions and check flap angles as specified in 06-10.
   (e) Repeat check on right flap.

   NOTE: If the results of inspection do not fall within the tolerance specified in 06-10, contact AQUILA Aviation for disposition.

(4) Install all items removed for access.

6. Adjustment/Test

A. Adjustment/Test
   (1) Remove access plate 210 AB (refer to 06-30).
   (2) With BAT switch in ON position turn flap control switch to CRUISE.
   (3) Turn BAT switch OFF.
   (4) Adjust push rod at flap actuator so that the flap torque tube assembly is in neutral position (refer to figure 201).
   (5) Adjust pushrods at each flap until the control surfaces are neutral with reference to wing trailing edge at root area.
   (6) Perform an flap control system inspection/check (refer to "Inspection/Check" above).
   (7) Install all items removed for access.

# CHAPTER 28

# FUEL

## TABLE OF CONTENTS


| Title | Chapter Section Subject | Page | Effectivity |
|---|---|---|---|
| FUEL - GENERAL | 28-00-00 | 1 | |
| Introduction | 28-00-00 | 1 | |
| General Description | 28-00-00 | 1 | |
| FUEL STORAGE - MAINTENANCE | 28-10-00 | 201 | |
| General | 28-10-00 | 201 | |
| Wing Fuel Tank Leakage Test | 28-10-00 | 201 | |
| FUEL DISTRIBUTION - MAINTENANCE | 28-20-00 | 201 | |
| General | 28-20-00 | 201 | |
| Fuel Selector / Shut-Off Valve Removal/Installation | 28-20-00 | 201 | |
| Electrical Fuel Pump Removal/Installation | 28-20-00 | 204 | |
| Electrical Fuel Pump Filter Element Maintenance | 28-20-00 | 204 | |
| Fuel System Pressure Test | 28-20-00 | 205 | |
| FUEL QUANTITY INDICATION - MAINTENANCE | 28-41-00 | 201 | |
| General | 28-41-00 | 201 | |
| Fuel Quantity Indicator Removal/Installation | 28-41-00 | 201 | |
| Fuel Quantity Sensor Removal/Installation | 28-41-00 | 201 | |
| Fuel Quantity Indicating System Test/Calibration | 28-41-00 | 203 | |

# FUEL - GENERAL

## 1. Introduction

A. This chapter covers those units and components which are not part of the engine but store or deliver fuel to the engine or indicate fuel quantity and pressure.
For additional information on the internal engine fuel system components, refer to the respective engine manufacturer's publications.

## 2. General Description

A. The fuel system consists of two main fuel tanks which are integral parts of the wings, a fuel selector / shut-off valve on the center console, an auxiliary fuel pump with an integrated fuel filter, an engine driven fuel pump and two single-barrel float type carburetors in the engine compartment as well as flexible hoses and aluminum-fuel-lines.

Fuel Quantity Data:

| | |
|---|---|
| Total fuel: | 120 liters (31.7 gallons) |
| Usable fuel: | 109,6 liters (28.9 gallons) |
| Unusable fuel: | 10,4 liters (2.8 gallons) |

B. Fuel Supply
(1) Fuel is delivered to the carburetors by the engine driven fuel pump from the fuel tank that is pre-selected by the fuel selector / shut-off valve. An electrical fuel pump is provided in case of failure of the engine driven fuel pump. Excessive fuel flows through return lines and the fuel selector valve back to the same tank.
(2) A fuel selector / shut-off valve is provided to select the desired fuel tank and to interrupt fuel supply in case of an emergency. The selector handle is mounted in view of the pilot and is easily accessible in the center console between the seats. The red, arrow shaped handle has a LEFT, RIGHT, and OFF position. Each position has a positive detent.

C. Fuel Indication
Fuel quantity is measured by capacitive or resistive type fuel level sensors and indicated by a dual fuel level indicator. Fuel pressure is measured at the engine and low fuel pressure is indicated by a warning light.

D. Fuel System Ventilation
The fuel tanks are vented from the top of each fuel tank through a vent line, connected at the outboard fuel tank rib, to a vent located on the winglets.

E. Fuel Drain System
Each tank has a manually operated drain at the bottom, inboard rear corner. A further drain valve is installed at the fuel system's lowest point, namely at the base of electrical fuel pump.

F. Fuel Lines
Fuel lines are made of aluminum tubing behind the firewall and stainless steel in the engine compartment. Flexible Hoses are made of Teflon with steel fittings and silicone-coated fire sleeves.

# FUEL SYSTEM SCHEMATIC

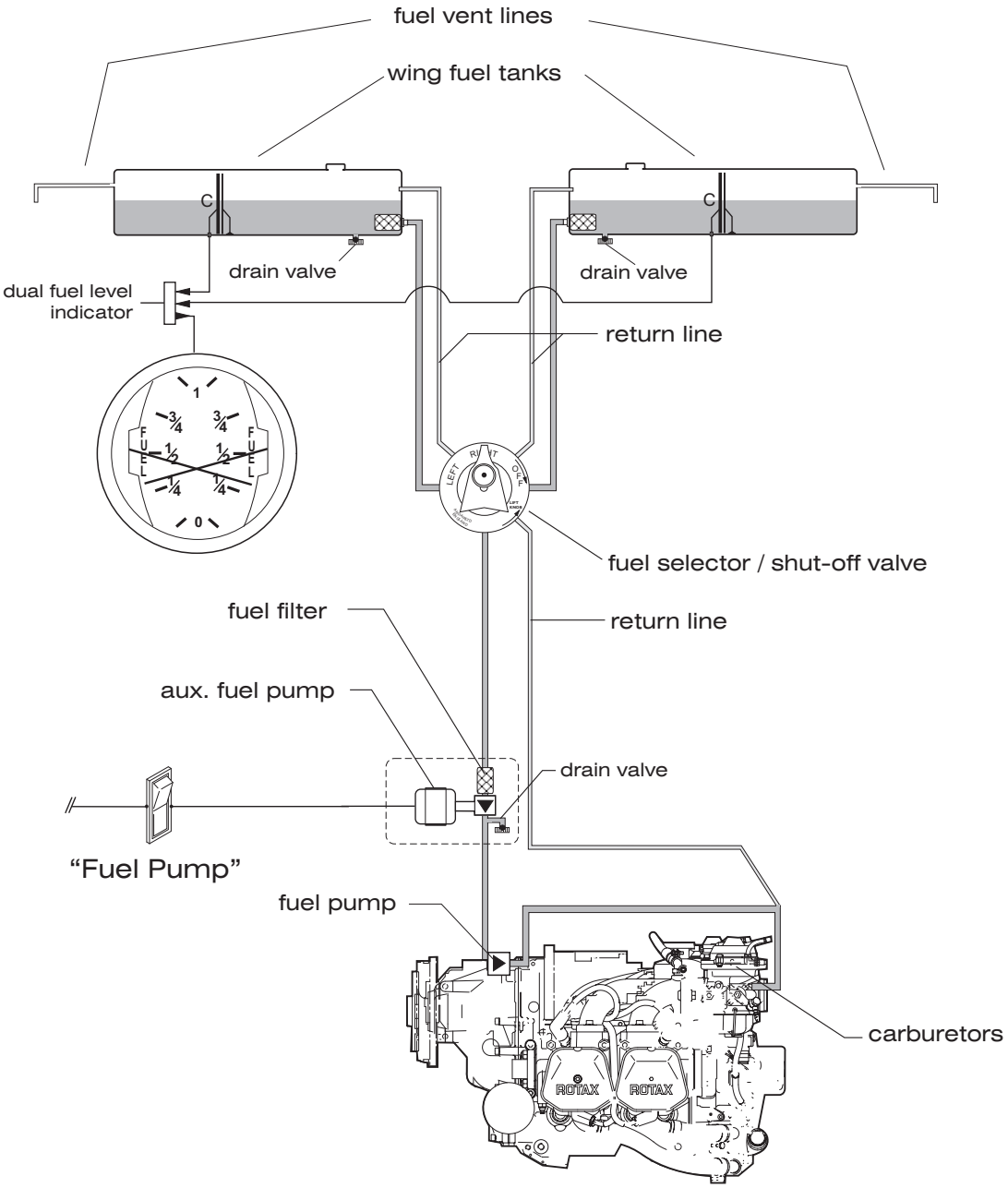


Fuel System (Schematic)
Figure 1

## FUEL STORAGE - MAINTENANCE

WARNING: PERFORM ALL FUEL SYSTEM MAINTENANCE IN ACCORDANCE WITH SAFETY PRECAUTIONS CONTAINED IN 12-11-00!

1. General

A. The fuel storage system consists of two integral fuel tanks, located at the inboard portion of each wing in front of the main spar. They are bounded by the upper and lower wing skins which are reinforced in this area, the main spar web, and the inboard and outboard fuel tank ribs.
Each fuel tank has a lockable fuel filler cap which is grounded to the airframe. The inner surfaces of the composite integral tanks are sealed with a special fuel tank sealing material to protect the composite fiber structure. A fuel baffle rib is provided to reduce fuel slosh in the fuel outlet and the fuel quantity sensor areas. The fuel tanks are vented from the top of each fuel tank through a vent line connected at the outboard fuel tank rib to a vent located on the winglets. Each inboard fuel tank rib has an outlet over the sump level that is equipped with a removable mesh strainer.

The inboard fuel tank ribs are easily accessible for maintenance work through access panel 610 BB / 510 BB in the lower wing skin.

B. The wing fuel tanks are maintenance-free. However, if a leak is suspected, AQUILA Aviation GmbH should be consulted.

2. Wing Fuel Tank Leakage Test

A. The following procedure should be used to check a wing fuel tank for leakage.
(1) Ensure electrical power to aircraft is OFF.
(2) Disconnect battery (refer to 24-30-00).
(3) Drain fuel from wing fuel tank.
(4) Open access plate 610 BB / 510 BB (refer to 06-30-00).
(5) Disconnect fuel outlet line from fuel tank.
(6) Disconnect fuel return line from fuel tank.
(7) Cap fuel tank vent line.
(8) Attach a suitable manometer (water manometer) to fuel tank outlet fitting.

WARNING: NEVER APPLY REGULATED OR UNREGULATED AIR FROM AN AIR COMPRESSOR TO THE FUEL SYSTEM OR COMPONENTS.

CAUTION: DO NOT PRESSURIZE THE FUEL TANKS TO MORE THAN 1.0 PSI. STRUCTURAL DAMAGE MAY OCCUR TO THE FUEL TANK IF MORE THAN 1.0 PSI IS APPLIED.

(9) Connect a well-regulated supply of air (1.0 psi maximum) to the return line fitting.
(10) Make sure filler cap is installed and sealed.
(11) Apply pressure slowly until 1.0 psi is obtained.
(12) Shut off air supply.
(13) If fuel tank holds pressure for 15 minutes, the tank with vent line is sealed.

## FUEL DISTRIBUTION - MAINTENANCE

WARNING: PERFORM ALL FUEL SYSTEM MAINTENANCE IN ACCORDANCE WITH SAFETY PRECAUTIONS CONTAINED IN 12-11-00!

1. General

A. The fuel distribution system consists primarily of the fuel selector / shut-off valve, an electrical fuel pump, fuel lines and the fuel pump switch.

The fuel selector handle is located in the center console between the seats. The red, arrow shaped handle has a LEFT, RIGHT and OFF position. To switch the valve to the OFF position a knob located at the top of the handle must be pulled while the handle is rotated simultaneously. With the valve in this position fuel flow from and to the tanks is stopped. In both operating positions the fuel supply / return lines of the selected fuel tank are open while the fuel supply/ return lines of the other one are closed.

The electrical fuel pump is incorporated into the system without a bypass. In this way fuel flows through a fuel strainer which is integral of the fuel pump even if the pump is off. The electrical fuel pump is mounted in the engine compartment at the lower left firewall.

B. A clean fuel distribution system is very important for the secure and continuous supply of fuel to the engine. The fuel system is equipped with drain valves with which fuel in the system can be examined for contamination and grade.
(1) The electrical fuel pump has a filter screen which must be cleaned regularly. The filter screen can be removed for maintenance.
(2) A mesh strainer is installed on the fuel outlet in each fuel tank. The strainer is accessible by opening the fuel tank rib access panel 610 BB / 510 BB. The strainer is brazed to a fitting that is installed in the fuel tank port. The fuel strainers in the fuel tanks should always be cleaned after aircraft has been in storage. If any damage or restrictions are noted, the strainer should be replaced.
(3) The fuel system has a drain valve at it's lowest point, namely at the base of the electrical fuel pump. The drain valve is accessible from outside the nose section without removing any component. It should be used regularly to check fuel for water and contamination.
(4) Each wing fuel tank has a drain-valve at it's base. The drain valves are accessible from outside at the bottom of the wings in the wing root area. They should be used regularly to check fuel for water and contamination.

2. Fuel Selector / Shut-Off Valve Removal/Installation

A. Remove Fuel Selector / Shut-Off Valve
(1) Ensure electrical power to aircraft is OFF.
(2) Disconnect battery (refer to 24-30-00).
(3) Drain fuel from fuel system completely using the wing fuel tank drains and the drain at the electrical fuel pump.
(4) Remove access panels 211 BB and 211 HL/HR in the cabin (refer to 25-12-00).
(5) Remove access panel 211 GT with fuel selector / shut-off valve control lever and connecting shaft (refer to 25-12-00).

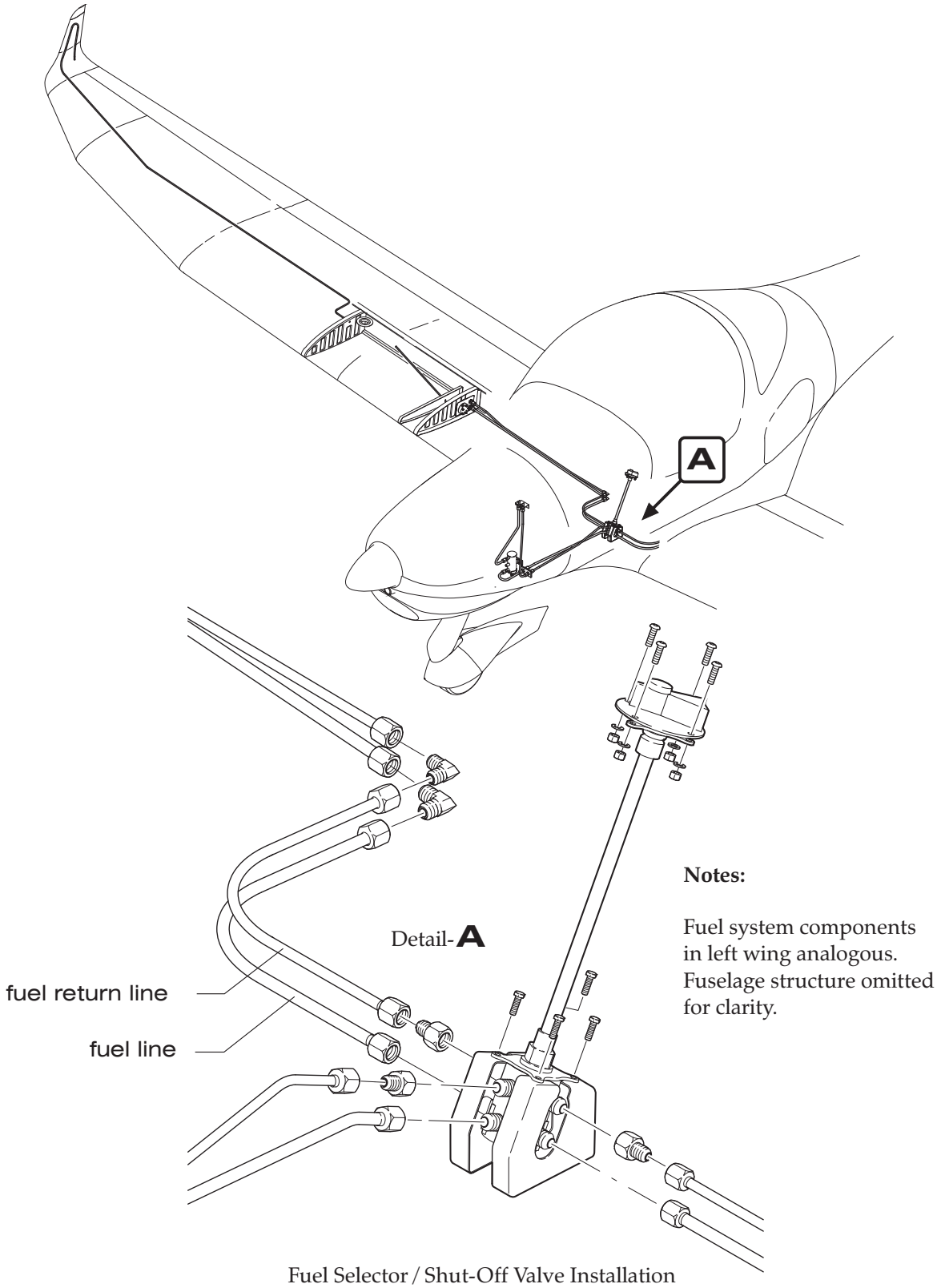


**Notes:**

Fuel system components in left wing analogous. Fuselage structure omitted for clarity.

Fuel Selector / Shut-Off Valve Installation
Figure 201

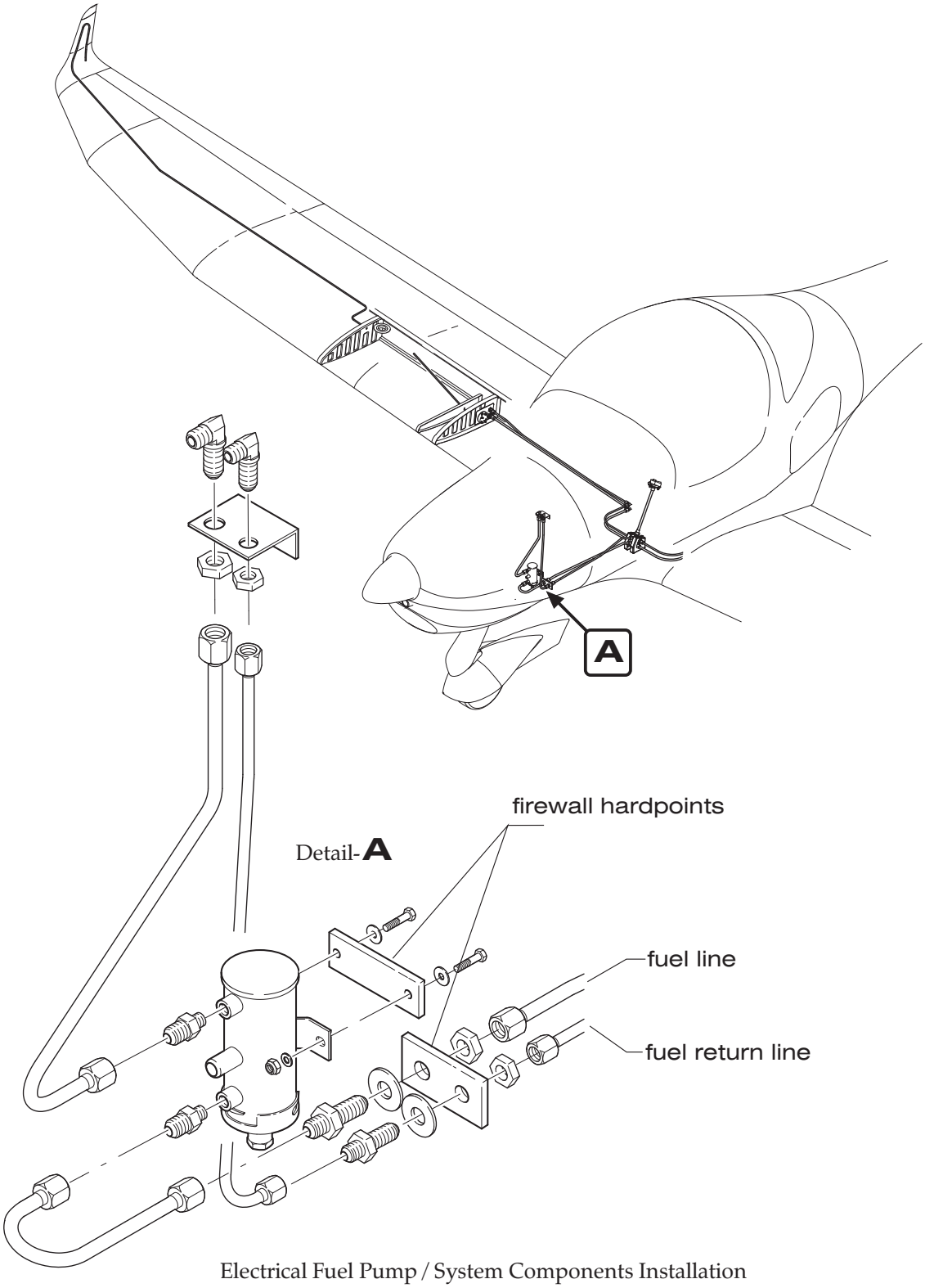


Electrical Fuel Pump / System Components Installation
Figure 202

(6) Disconnect the fuel supply and return lines at valve.
(7) Remove bolts securing valve to mounting bracket and remove the fuel selector / shut-off valve assembly from aircraft.

B. Install Fuel Selector / Shut-Off Valve
(1) Verify battery is disconnected and electrical power to aircraft is OFF.
(2) Place fuel selector / shut-off valve in position and secure using washers and bolts.
(3) Connect all fuel supply and return lines at valve.
(4) Connect the fuel selector / shut-off valve control lever. Make sure that both the valve and the valve control lever are set to OFF and install access panel 211 GT with fuel selector / shut-off valve control lever and connecting shaft (refer to 25-12-00).
(5) Refuel the aircraft.
(6) Pressure check complete fuel system (refer to "Fuel System Pressure Test" below).
(7) Inspect fuel selector / shut-off valve and enclosure for any signs of fuel leakage.
(8) Reconnect battery (refer to 24-30-00).
(9) Perform operational check of the fuel distribution system.
(10) Install all items removed for access.

3. Electrical Fuel Pump Removal/Installation

A. Remove Electrical Fuel Pump
(1) Ensure electrical power to aircraft is OFF.
(2) Remove engine cowling (refer to 71-10-00).
(3) Disconnect battery (refer to 24-30-00).
(4) Close fuel selector / shut-off valve.
(5) Disconnect the pump wires.
(6) Disconnect fuel lines at electrical fuel pump. Drain fuel from line.
(7) Remove bolts, washers and nuts securing electrical fuel pump to firewall and remove electrical fuel pump.

B. Install Electrical Fuel Pump
(1) Verify battery is disconnected and electrical power to aircraft is OFF.
(2) Secure electrical fuel pump to firewall using bolts, washers and nuts.
(3) Reconnect fuel lines to electrical fuel pump.
(4) Reconnect the pump electrical wires.
(5) Reconnect battery (refer to 24-30-00).

4. Electrical Fuel Pump Filter Element Maintenance

A. Maintenance is accomplished by the following procedure:
(1) Remove locking wire at lower fuel pump cap.
(2) Remove lower cap.
(3) Remove filter element and clean by washing.
(4) Check disk magnet for metal particles.
(5) Reassemble filter and cap.
(6) Secure cap using locking wire.

5. Fuel System Pressure Test

A. Leak-test the fuel system by the following procedure:
(1) Fill the wing fuel tank with approved fuel.
(2) Remove engine cowling, crew seats and all other panels and covers to gain access to all fuel system components and fuel lines (refer to 25-10-00, 25-12-00 and 71-10-00).
(3) Place the fuel selector / shut-off valve in LEFT (RIGHT) position.
(4) Disconnect the pressure fuel line and return line in the engine compartment where the flexible fuel lines are connected to the aluminum lines and cap fittings.
(5) Connect a rubber hose with a well-regulated supply of air (1.0 psi maximum) to the outboard end of either fuel tank vent line.
(6) Connect a suitable manometer (water manometer) to the other fuel vent line.
(7) Make sure filler caps are installed and sealed.

WARNING: NEVER APPLY REGULATED OR UNREGULATED AIR FROM AN AIR COMPRESSOR TO THE FUEL SYSTEM OR COMPONENTS.

NEVER ATTEMPT TO REMOVE THE FUEL FILLER CAP WITH PRESSURE IN THE FUEL SYSTEM.

CAUTION: DO NOT PRESSURIZE THE FUEL SYSTEM TO MORE THAN 1.0 PSI. DAMAGE MAY OCCUR TO SYSTEM COMPONENTS IF MORE THAN 1.0 PSI IS APPLIED.

(8) Apply pressure to the system slowly until 1.0 psi is reached.
(9) Shut off air supply
(10) System pressure should remain constant for 15 minutes.
(11) Inspect the seams, fittings and connections of the accessible portion of the wing fuel tank. Check the fuel lines, the fuel selector / shut-off valve and all other fuel related areas for signs of leakage.
(12) If leakage is suspected (pressure readings drop) apply soapy water to the area in question and inspect for bubbles.
(13) Release all pressure from the fuel system.
(14) Remove the rubber hose with the supply of air and the manometer from the end of fuel vent lines.
(15) Reconnect the pressure fuel line to the electrical fuel pump.
(16) Remove plugs of fuel filler caps vent holes.
(17) Install all items that have been removed prior to performing the test (refer to 25-10-00, 25-12-00 and 71-10-00).
(18) If any leakage is detected, seal as required.

## FUEL QUANTITY INDICATION - MAINTENANCE

WARNING: PERFORM ALL FUEL SYSTEM MAINTENANCE IN ACCORDANCE WITH SAFETY PRECAUTIONS CONTAINED IN 12-11-00!

1. General

A. The fuel quantity indicating system consists of two fuel quantity sensors, one in each tank, a dual fuel quantity indicator and wiring connecting the components.
The fuel quantity indicator is located on the right side of the instrument panel. It has the markings FULL, ¾, ½, ¼ and EMPTY for each tank and has been calibrated during installation.
The fuel quantity sensors are either capacitive or resistive type and easily accessible for maintenance or replacement through access panels in the lower wing skin.

B. Maintenance is limited to the removal and installation of the system components.

2. Fuel Quantity Indicator Removal/Installation

A. Remove Fuel Quantity Indicator
(1) Ensure electrical power to aircraft is OFF.
(2) Disconnect battery (refer to 24-30-00).
(3) Remove glare shield (refer to 31-10-00).
(4) Remove cable connector from back of indicator.
(5) While supporting indicator, remove screws attaching indicator to instrument panel.
(6) Remove indicator from aircraft.

B. Install Fuel Quantity Indicator.
(1) Position indicator to instrument panel hole and secure with screws.
(2) Install cable connector at back of indicator.
(3) Reconnect battery (refer to 24-30-00).
(4) Perform a fuel quantity indicating system test / calibration (refer to “Test/Calibration” below).
(5) Install glare shield (refer to 31-10-00).

3. Fuel Quantity Sensor Removal/Installation

A. Remove Fuel Quantity Sensor
(1) Ensure electrical power to aircraft is OFF.
(2) Disconnect battery (refer to 24-30-00).
(3) Drain wing fuel tank with sensor that is to be removed (refer to 12-11-00).
(4) Open access / inspection plate 610 BB / 510 BB to gain access to sensor (refer to 06-30-00).
(5) Remove nuts securing sensor to inboard fuel tank rib.
(6) Disconnect electrical cables from sensor.
(7) Carefully withdraw sensor from wing tank.

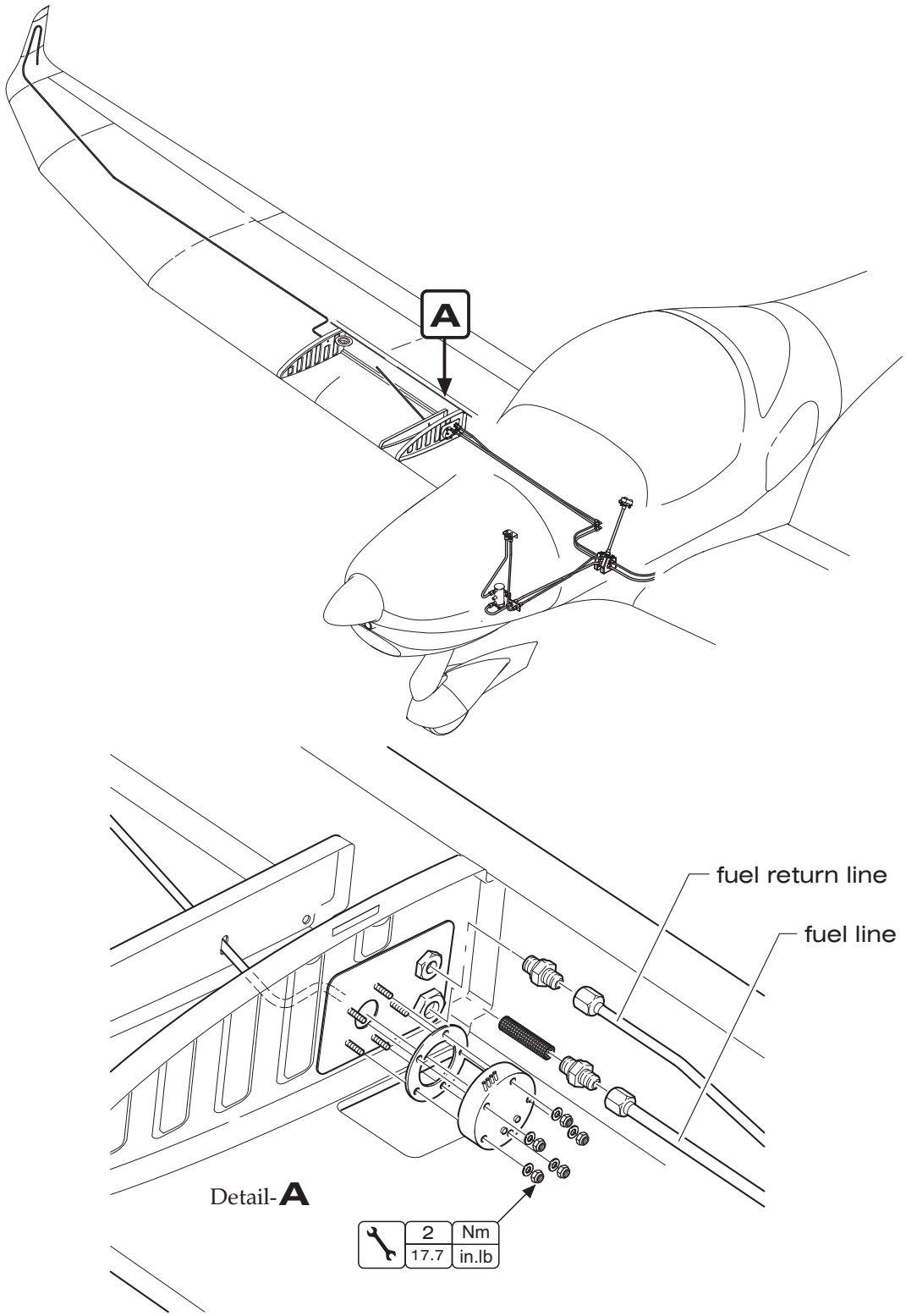


Fuel System Components Installation
Figure 201A

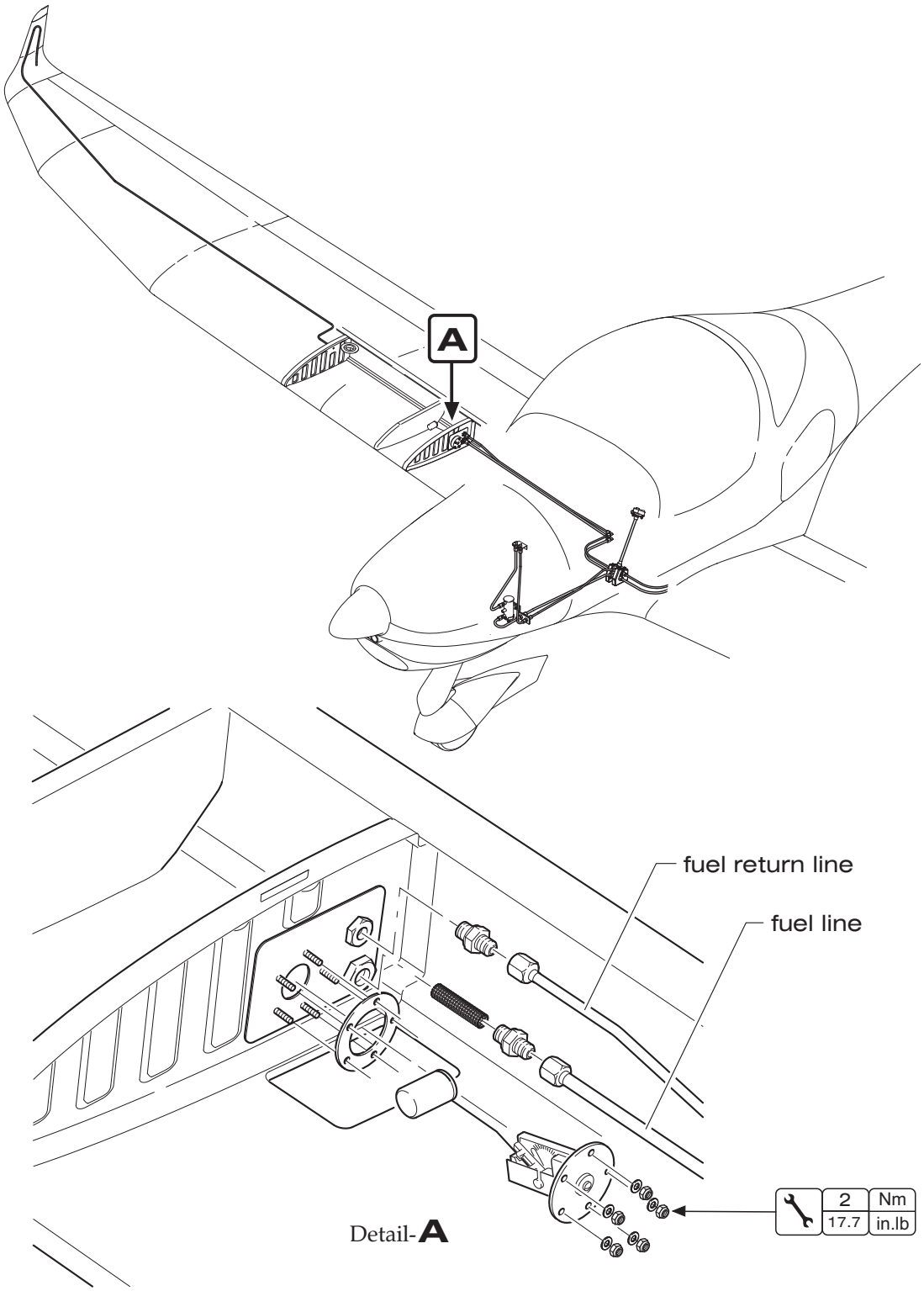


Fuel System Components Installation
Figure 201B

B. Install Fuel Quantity Sensor
(1) Verify battery is disconnected and electrical power to aircraft is OFF.
(2) Check ease of movement of the float arm before installing the sensor.[1)]
(3) Place sensor with new gasket on to the threaded studs at inboard fuel tank rib.

CAUTION: THE FUEL QUANTITY SENSOR SHOULD BE FED CAREFULLY INTO THE FUEL TANK (AND THROUGH THE HOLE OF THE FUEL BAFFLE RIB[2)]). A BENT FLOAT ARM MAY CAUSE ERRONEOUS READINGS.[1)]

(4) Connect electrical cables to sensor.
(5) Secure sensor with washers and nuts. Torque nuts crosswise to 2 Nm (17.7 in.lbs).
(6) Reconnect battery (refer to 24-30-00).
(7) Perform a fuel quantity indicating system calibration (refer to "Test/Calibration" below).

4. Fuel Quantity Indicating System Test/Calibration

NOTE: When a fuel quantity sensor is replaced, the fuel quantity indicating system must be calibrated. When a fuel quantity indicator is replaced, the system must be at least functionally tested and recalibrated as necessary.

A. Fuel Quantity Indicating System Test
(1) Prepare aircraft
(a) Drain fuel from wing tanks (refer to 12-11-00).
(b) Verify fuel selector / shut-off valve is in OFF position.
(c) Level the aircraft laterally and longitudinally (refer to 08-10-00).
(2) Ensure ALT1 / BAT switch is in the OFF position.
(3) Fill 5,2 liters (1.37 gallons) of fuel into both wing fuel tanks.
(4) Turn BAT switch to the ON position.
(5) Wait until pointer settles in it's final position.
Check that fuel quantity indicator reads empty for both tanks.
(6) Turn BAT switch to the OFF position.
(7) Add 54,8 liters (14.46 gallons) of fuel to LH wing fuel tank.
(8) Turn BAT switch to the ON position.
(9) Wait until pointer settles in it's final position.
Check that LH fuel quantity indicator reads full.
(10) Turn BAT switch to the OFF position.
(11) Repeat steps (7) thru (10) for RH wing fuel tank.

[1)] Resistive type fuel level sensor only.
[2)] Capacitive type fuel level sensor only.

B. Resistive Type Fuel Quantity Indicating System Calibration

NOTE: A calibration module is necessary to perform the steps described below. The calibration module is installed at the back of the fuel quantity indicator. Contact AQUILA Aviation GmbH if no calibration module is installed.

(1) Prepare aircraft
  (a) Drain fuel from wing tanks (refer to 12-11-00).
  (b) Verify fuel selector / shut-off valve is in OFF position.
  (c) Level the aircraft laterally and longitudinally (refer to 08-10-00).
  (d) Remove glare shield (refer to 31-10-00).
(2) Ensure ALT1 / BAT switch is in the OFF position.
(3) Fill 18,9 liters (4.99 gallons) of fuel into both wing fuel tanks.
(4) Turn BAT switch to the ON position.
(5) Use the two potentiometers of the calibration module at the back of the fuel quantity gauge to set the pointers of the gauge to “1/4”. Pay attention to the delayed indication of the gauge.
(6) Turn BAT switch to the OFF position and drain fuel from wing tanks (refer to 12-11-00).
(7) Perform fuel quantity indicating system test as described above.
(8) Reinstall glare shield (refer to 31-10-00).

C. Capacitive Type Fuel Quantity Indicating System Calibration

WARNING: ACCURACY OF THE INDICATING SYSTEM STRONGLY DEPENDS ON THE FUEL GRADE USED FOR CALIBRATION! REFER TO SB-AT01-020 FOR FURTHER INFORMATION.

WARNING: SYSTEM CALIBRATION SHOULD BE PERFORMED WITH UNLEADED SUPER (RON 95) OR SUPER PLUS (RON 98) FUEL GRADE. IF AVGAS 100LL OR AVGAS UL91 ARE USED FOR CALIBRATION, AN ADDITIONAL PLACARD HAS TO BE INSTALLED ON THE INSTRUMENT PANEL. DO NOT USE MIXTURES OF FUEL GRADE FOR CALIBRATION!

WARNING
Fuel gauge calibrated with AVGAS.
Indicated fuel level may differ from
actual fuel level if MOGAS is used.

WARNING: FOR U.S. REGISTERED AIRCRAFT AND AIRCRAFT REGISTERED WHERE THE FAA TC HAS BEEN ACCEPTED, SYSTEM CALIBRATION MUST BE PERFORMED WITH AVGAS 100LL OR AVGAS UL91 FUEL GRADE. DO NOT USE UNLEADED SUPER (RON 95) OR SUPER PLUS (RON 98) OR MIXTURES OF FUEL GRADE FOR CALIBRATION!

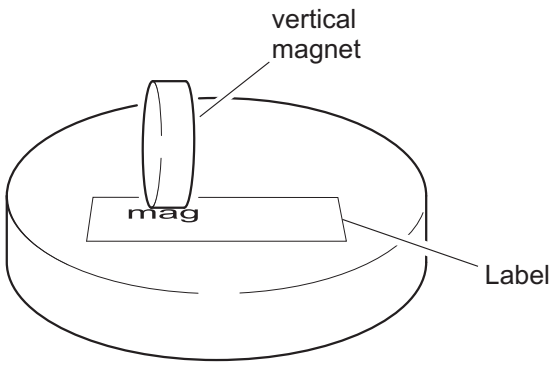


Magnet positioning during calibration
Figure 202

NOTE: Calibration procedure depends on the type of fuel quantity sensor installed:
Type A: Capacitive sensor with potentiometers for calibration.
Type B: Capacitive sensor without potentiometers and without "mag" label.
Type C: Capacitive sensor without potentiometers and with "mag" label (figure 202).

NOTE: Senders without potentiometer are calibrated by using a magnet (type C) as shown in figure 202 or by applying a jumper between sender wire (yellow) and ground (type B). For these senders a second person is necessary for calibration as timing is important. One for using the magnet / jumper, the other one for switching the power.

(1) Prepare aircraft
  (a) Drain fuel from wing tanks (refer to 12-11-00).
  (b) Verify fuel selector / shut-off valve is in OFF position.
  (c) Level the aircraft laterally and longitudinally (refer to 08-10-00).
  (d) Open access panel 610 BB and 510 BB (refer to 06-10-30).
(2) Ensure ALT1 / BAT switch is in the OFF position.
(3) Fill 5,2 liters (1.37 gallons) of fuel into both wing fuel tanks.

Type A: Fuel level sensors with potentiometers:

(4) Turn both the "empty" and "full" potentiometers on both fuel level sensors to the full clockwise position.
(5) Turn BAT switch to the ON position.
(6) Turn potentiometers "empty" on the fuel level sensors counterclockwise until fuel level indicator reads "empty" for both tanks.
(7) Turn BAT switch to the OFF position.
(8) Add 27,4 liters (7.23 gallons) of fuel to both wing fuel tanks.
(9) Turn BAT switch to the ON position.
(10) Turn potentiometer "full" on the fuel level sensors counterclockwise until fuel level indicator reads "1/2" for both tanks.
(11) Turn BAT switch to the OFF position.

Type B & C: Fuel level sensors without potentiometers:

(4) For the jumper version (type B) jump the sender wire to ground. For the magnet version (type C) place the magnet on the sensor head as shown in figure 201.
(5) Turn BAT switch to the ON position.
After 2 seconds remove the jumper / magnet.
The pointer will fluctuate between empty and full readings and then settle on empty.
(6) Turn BAT switch to the OFF position.
(7) Repeat steps (4) thru (6) for other wing fuel tank.
(8) Add 54,8 liters (14.46 gallons) of fuel to both wing fuel tanks.
(9) With power OFF apply the jumper / magnet as described under (4).
(10) Turn BAT switch to the ON position.
After 4 seconds (jumper) / 6 seconds (magnet) remove the jumper / magnet.
The pointer will fluctuate between empty and full readings and then settle on full.
(11) Turn BAT switch to the OFF position.
(12) Repeat steps (9) thru (11) for other wing fuel tank.

# CHAPTER 31

# INDICATING / RECORDING SYSTEMS

## TABLE OF CONTENTS


| Title | Chapter Section Subject | Page | Effectivity |
|---|---|---|---|
| INDICATING / RECORDING SYSTEMS - GENERAL | 31-00-00 | 1 | Analog instr. |
| Introduction | 31-00-00 | 1 | Analog instr. |
| General Description | 31-00-00 | 1 | Analog instr. |
| INDICATING / RECORDING SYSTEMS - GENERAL | 31-00-00 | 1 | Aspen EFD1000 |
| Introduction | 31-00-00 | 1 | Aspen EFD1000 |
| General Description | 31-00-00 | 1 | Aspen EFD1000 |
| INDICATING / RECORDING SYSTEMS - GENERAL | 31-00-00 | 1 | Garmin G500 |
| Introduction | 31-00-00 | 1 | Garmin G500 |
| General Description | 31-00-00 | 1 | Garmin G500 |
| INSTRUMENT PANEL - MAINTENANCE | 31-10-00 | 201 | |
| General | 31-10-00 | 201 | |
| Glare Shield Removal/Installation | 31-10-00 | 201 | |
| Instrument Panel Removal/Installation | 31-10-00 | 201 | |
| RECORDERS - MAINTENANCE | 31-30-00 | 201 | KAPI system |
| General | 31-30-00 | 201 | KAPI system |
| KAPI Unit Removal/Installation | 31-30-00 | 203 | KAPI system |
| KAPI GPS/GSM Antenna Removal/Installation | 31-30-00 | 203 | KAPI system |
| KAPI Airspeed Sensor Removal/Installation | 31-30-00 | 204 | KAPI system |
| KAPI G-Sensor Removal/Installation | 31-30-00 | 204 | KAPI system |

## INDICATING / RECORDING SYSTEMS - GENERAL

1. Introduction

A. Basically the instruments and avionic equipment can be chosen by the customer, but it cannot be installed in any arbitrary combination. Before removing or installing equipment the airplane manufacturer AQUILA must be contacted, with the exception of replacing a unit by an identical one.

2. General Description

A. For easy and quick reference, the instruments and controls are clearly divided in groups. The group of flight instruments is directly in front of the pilot. Below the flight instruments is a row of switches. The middle section of the panel contains the avionics equipment including the NAV/COM transceiver and the transponder. On the right side of the avionics column the power gauges, the tachometer and the manifold pressure indicator, are mounted. A group of instruments for monitoring engine and system conditions is located below. These gauges show the fuel level in each tank, cylinder head temperature, oil temperature, oil pressure as well as amperes and volts of the electrical system. The circuit breaker panel is located in front of the co-pilot.

B. A center console contains the control knobs for the carburetor heat, the choke, cabin heating, the throttle and rpm control levers, the fuel selector / shut-off valve, the parking brake control knob, and the trim control switch.

C. The description, function and maintenance of the several specific instruments is contained in the appropriate section of this manual.

D. For an overview of the position of the various instruments, devices and controls on the instrument panel and center pedestal, refer to figure 1.

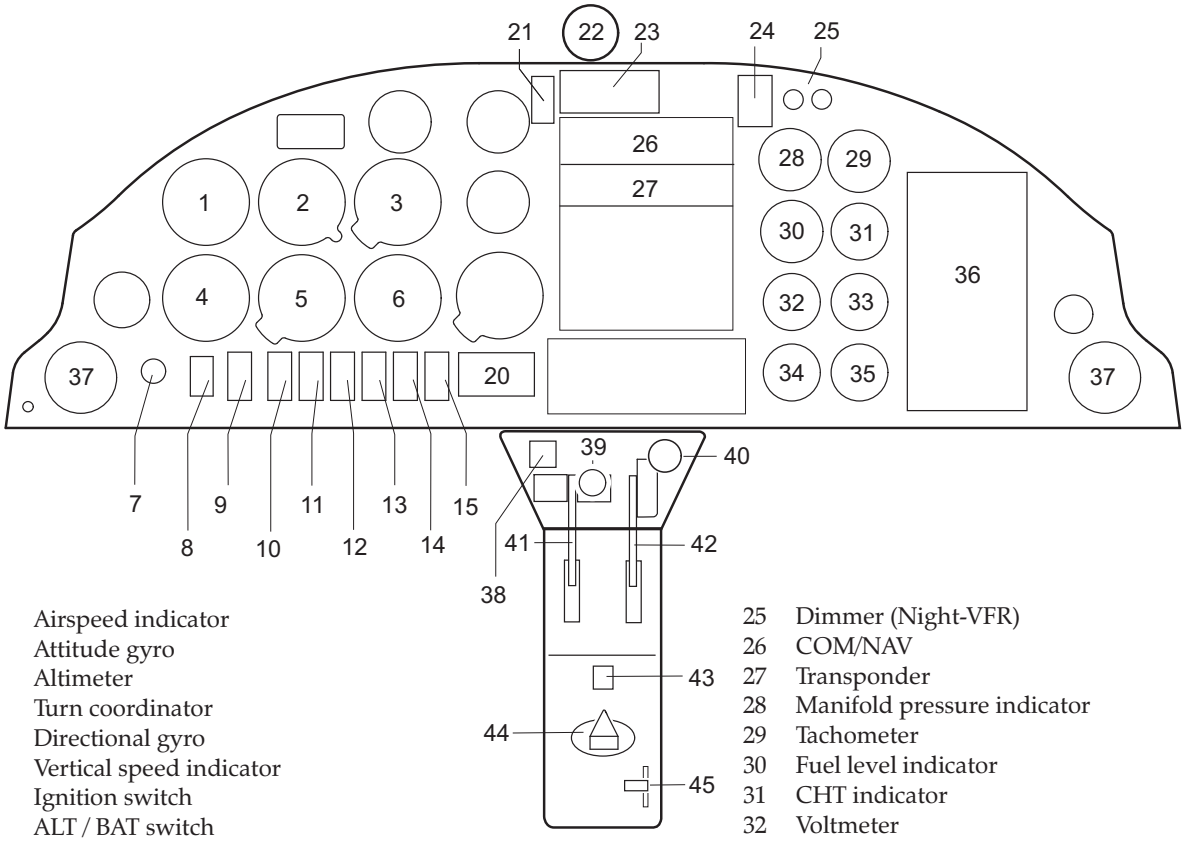


1 Airspeed indicator
2 Attitude gyro
3 Altimeter
4 Turn coordinator
5 Directional gyro
6 Vertical speed indicator
7 Ignition switch
8 ALT / BAT switch
9 Electrical fuel pump switch
10 Avionic master switch
11 NAV light switch
12 Anti-collision light switch
13 Landing light switch
14 Instrument light switch
15 Pitot heat switch (optional)

20 Flap control switch / indicator
21 Elevator trim position indicator
22 Magnetic compass
23 Warning lights
24 ELT remote control (optional)

25 Dimmer (Night-VFR)
26 COM/NAV
27 Transponder
28 Manifold pressure indicator
29 Tachometer
30 Fuel level indicator
31 CHT indicator
32 Voltmeter
33 Oil temperature indicator
34 Ammeter
35 Oil pressure indicator
36 Circuit breaker panel
37 Fresh air ventilator
38 Carburetor heat control
39 Cabin heat control
40 Choke control
41 Throttle lever
42 Propeller control lever
43 Elevator trim switch
44 Fuel selector / shut-off valve
45 Parking brake control lever

Note: Arrangement of instruments may be different due to varying equipment.

Instrument Panel Basic Configuration for Day & Night VFR
Figure 1

## INDICATING / RECORDING SYSTEMS - GENERAL

1. Introduction

A. Basically the instrument and avionic equipment can be chosen by the customer, but it cannot be installed in any arbitrary combination. Before removing or installing equipment the airplane manufacturer AQUILA must be contacted, with the exception of replacing a unit by an identical one.

2. General Description

A. For easy and quick reference, the instruments and controls are clearly divided in groups. The Aspen EFD1000 PFD as the primary flight display is directly in front of the pilot. The back-up attitude indicator for Night-VFR is installed close to the Aspen EFD1000 PFD. Below the Aspen EFD1000 PFD is a row of switches. The middle section of the panel contains the avionics equipment including the NAV/COM transceiver and the transponder. On the right side of the avionics column the power gauges, the tachometer and the manifold pressure indicator, are mounted. A group of instruments for monitoring engine and system conditions is located below. These gauges show the fuel level in each tank, cylinder head temperature, oil temperature, oil pressure as well as amperes and volts of the electrical system. The circuit breaker panel is located in front of the co-pilot.

B. A center console contains the control knobs for the carburetor heat, the choke, cabin heating, the throttle and rpm control levers, the fuel selector / shut-off valve, the parking brake control knob, and the trim control switch.

C. The description, function and maintenance of the several specific instruments is contained in the appropriate section of this manual.

D. For an overview of the position of the various instruments, devices and controls on the instrument panel and center pedestal, refer to figure 1.

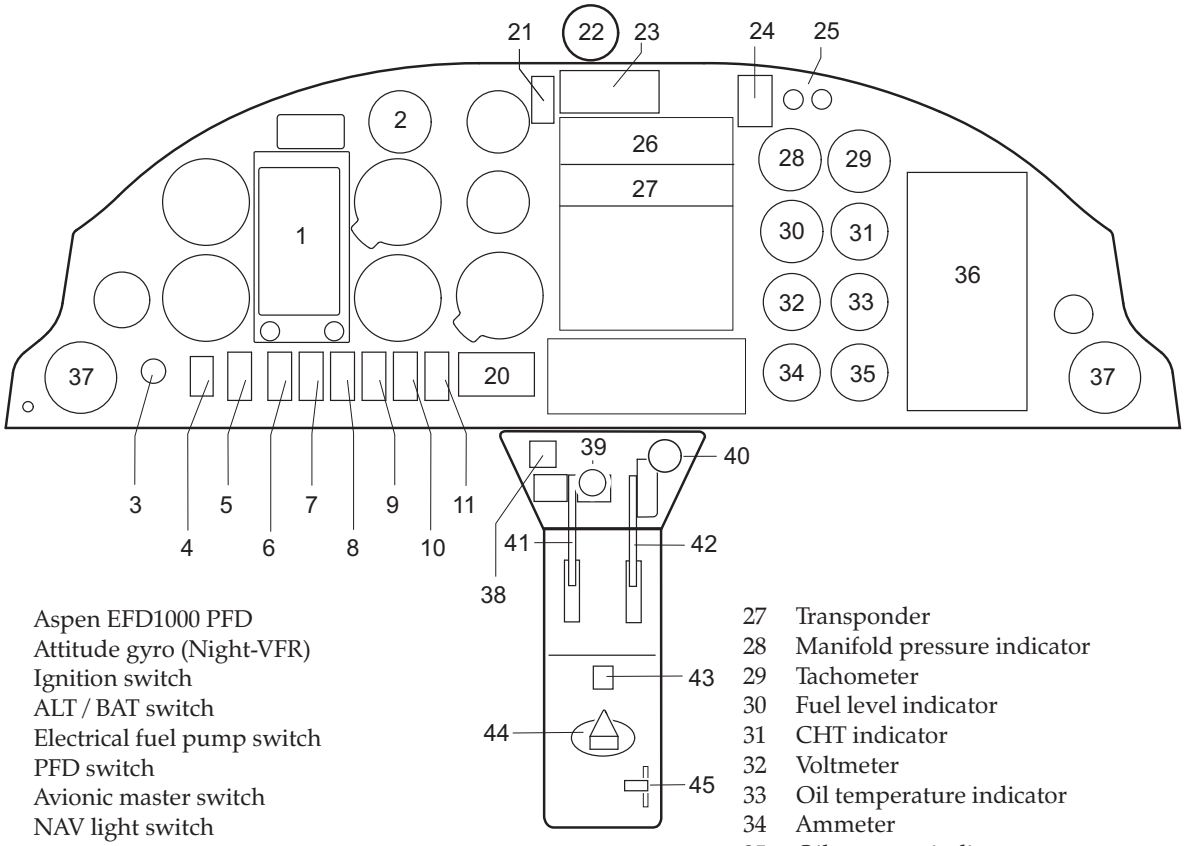


1 Aspen EFD1000 PFD
2 Attitude gyro (Night-VFR)
3 Ignition switch
4 ALT / BAT switch
5 Electrical fuel pump switch
6 PFD switch
7 Avionic master switch
8 NAV light switch
9 Anti-collision light switch
10 Landing light switch
11 Instrument light switch

20 Flap control switch / indicator
21 Elevator trim position indicator
22 Magnetic compass
23 Warning lights
24 ELT remote control (optional)
25 Dimmer (Night-VFR)
26 COM/NAV

27 Transponder
28 Manifold pressure indicator
29 Tachometer
30 Fuel level indicator
31 CHT indicator
32 Voltmeter
33 Oil temperature indicator
34 Ammeter
35 Oil pressure indicator
36 Circuit breaker panel
37 Fresh air ventilator
38 Carburetor heat control
39 Cabin heat control
40 Choke control
41 Throttle lever
42 Propeller control lever
43 Elevator trim switch
44 Fuel selector / shut-off valve
45 Parking brake control lever

Note: Arrangement of instruments may be different due to varying equipment.

Instrument Panel Basic Configuration for Day & Night VFR
Figure 1

## INDICATING / RECORDING SYSTEMS - GENERAL

1. Introduction

A. Basically the instrument and avionic equipment can be chosen by the customer, but it cannot be installed in any arbitrary combination. Before removing or installing equipment the airplane manufacturer AQUILA must be contacted, with the exception of replacing a unit by an identical one.

2. General Description

A. For easy and quick reference, the instruments and controls are clearly divided in groups. The Garmin G500 as the primary flight display is directly in front of the pilot. The back-up attitude indicator for Night-VFR is installed close to the Garmin G500. Below the G500 is a row of switches. The middle section of the panel contains the avionics equipment including the NAV/COM transceiver and the transponder. On the right side of the avionics column the power gauges, the tachometer and the manifold pressure indicator, are mounted. A group of instruments for monitoring engine and system conditions is located below. These gauges show the fuel level in each tank, cylinder head temperature, oil temperature, oil pressure as well as amperes and volts of the electrical system. The circuit breaker panel is located in front of the co-pilot.

B. A center console contains the control knobs for the carburetor heat, the choke, cabin heating, the throttle and rpm control levers, the fuel selector / shut-off valve, the parking brake control knob, and the trim control switch.

C. The description, function and maintenance of the several specific instruments is contained in the appropriate section of this manual.

D. For an overview of the position of the various instruments, devices and controls on the instrument panel and center pedestal, refer to figure 1.

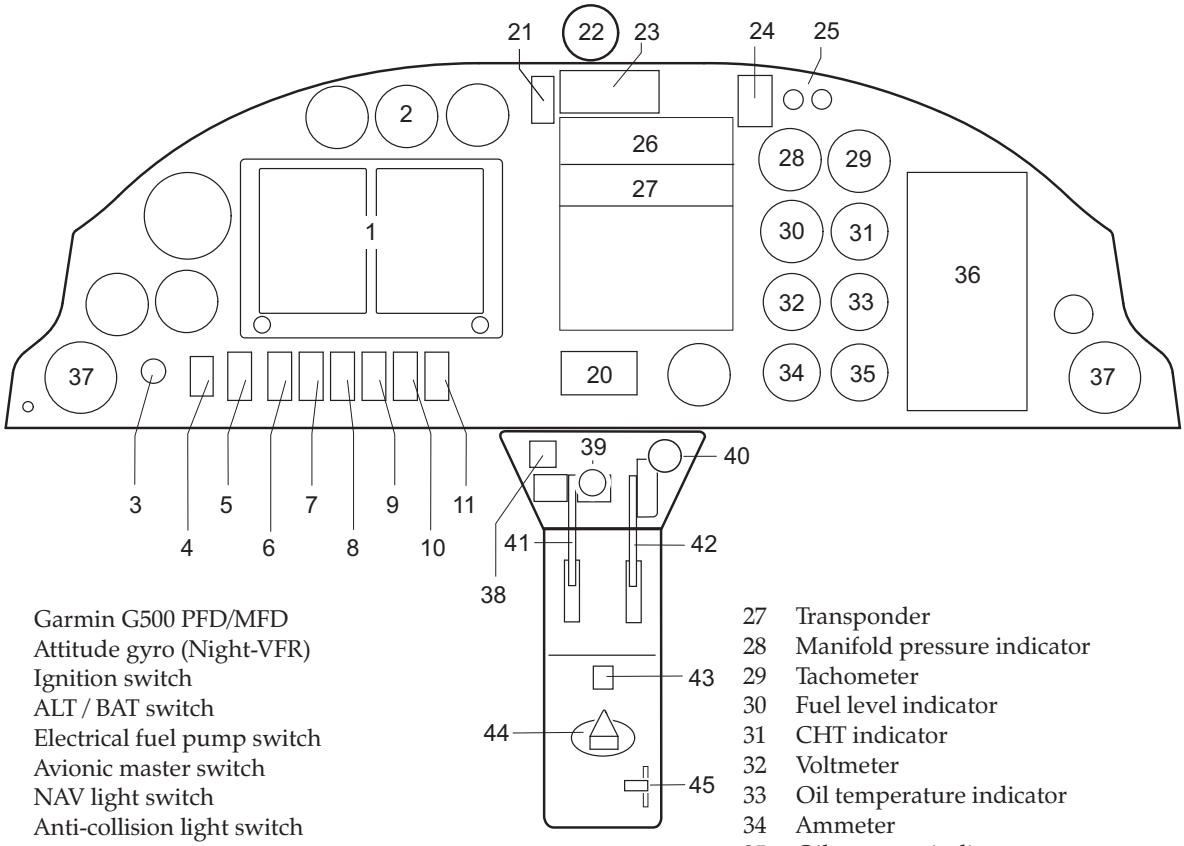


1 Garmin G500 PFD/MFD
2 Attitude gyro (Night-VFR)
3 Ignition switch
4 ALT / BAT switch
5 Electrical fuel pump switch
6 Avionic master switch
7 NAV light switch
8 Anti-collision light switch
09 Landing light switch
10 Instrument light switch
11 Pitot heat switch

20 Flap control switch / indicator
21 Elevator trim position indicator
22 Magnetic compass
23 Warning lights
24 ELT remote control (optional)
25 Dimmer (Night-VFR)
26 COM/NAV

27 Transponder
28 Manifold pressure indicator
29 Tachometer
30 Fuel level indicator
31 CHT indicator
32 Voltmeter
33 Oil temperature indicator
34 Ammeter
35 Oil pressure indicator
36 Circuit breaker panel
37 Fresh air ventilator
38 Carburetor heat control
39 Cabin heat control
40 Choke control
41 Throttle lever
42 Propeller control lever
43 Elevator trim switch
44 Fuel selector / shut-off valve
45 Parking brake control lever

Note: Arrangement of instruments may be different due to varying equipment.

Instrument Panel Basic Configuration for Day & Night VFR
Figure 1

## INSTRUMENT PANEL - MAINTENANCE

1. General

A. The instrument panel is made from aluminum alloy and is formed in one piece with a shelf. The shelf fits between the panel and the firewall. The panel shelf is attached on the left and right sides to support consoles and secured to the fuselage with bolts. The equipment is mounted in cut-outs and can be easily accessed from the rear of the panel when the glare shield is removed.
If required, e.g. during maintenance on the fuselage structure, the instrument panel assembly can be removed completely.

2. Glare Shield Removal/Installation

A. Remove Glare Shield
(1) Ensure electrical power to aircraft is OFF.
(2) Remove 4 screws on top of glare shield securing glare shield to instrument panel.
(3) Remove 3 screws on each side of glare shield securing glare shield to fuselage.
(4) Disconnect electrical connectors to allow removal of the glare shield.
(5) Remove glare shield.

B. Install Glare Shield
(1) Check all connections, wires, electrical connectors and hoses on rear side of instrument panel.
(2) Put glare shield in position and connect electrical connectors to glare shield.
(3) Secure glare shield to fuselage and instrument panel using screws.

3. Instrument Panel Removal/Installation

A. Remove Instrument Panel
(1) Disconnect battery (refer to 24-30-00).
(2) Remove glare shield (refer to "Glare Shield Removal/Installation" above).

NOTE: It is recommended to label wires, hoses and plugs which must be disconnected to ensure correct reinstallation of the instrument panel.

Refer to 91-00-00 for wiring diagrams. Refer to 34-10-00 (system schematic) for proper connecting components of the pitot-static system.

(3) Identify all electrical connectors, hoses, and associated wiring.
(4) Disconnect all electrical connectors, hoses, and associated wiring to allow removal of the instrument panel assembly.
(5) Remove nuts, bolts, washers and spacers securing instrument panel to center console.
(6) Remove nuts, bolts, washers and spacers securing instrument panel to fuselage. Remove instrument panel assembly from aircraft.

B. Install Instrument Panel
   (1) Put instrument panel assembly in position and secure to fuselage using bolts, spacers, washers and nuts.
   (2) Secure instrument panel to center console using bolts, spacers, washers, and nuts.
   (3) Connect all electrical connectors, hoses, and associated wiring that have been disconnected during disassembly procedure.
   (4) Install glare shield (refer to "Glare Shield Removal/Installation" above).
   (5) Reconnect battery (refer to 24-30-00).
   (6) Perform instrument panel inspection/check as described below.

C. Instrument Panel Inspection/Check
   (1) Perform pitot system leakage test (refer to 34-11-00).
   (2) Perform static system leakage test (refer to 34-11-00).
   (3) Perform functional test for all instruments and systems to assure proper operation.

   NOTE: A flight test is recommended after instrument panel installation to ensure the proper functioning of all instruments and systems.

## RECORDERS – MAINTENANCE

1. General

A. This section covers miscellaneous avionic equipment, including the KAPI Air Control FDR 07 Data Logger System. The scope of maintenance is limited to the removal and installation of components. For further information on the equipment, refer to the appropriate publications of the equipment manufacturer. For overhaul and repair, the manufacturer of the equipment has to be consulted.

B. The KAPI Air control FDR 07 is derived from KAPI Flight Data Recorder (FDR) and is designed to provide a system for the recording, storing, processing, evaluating and transmitting technical, operational and flight data. The KAPI Air Control FDR 07 is based on a one-circuit-board system which is controlled by a microprocessor made by VDO. To store data or transmit data to the ground station, the processing unit of the KAPI system accesses data signals of sensors already installed in the aircraft (engine parameters) along with data from its own sensors that have to be additionally installed together with the KAPI system (airspeed and g-sensor). Furthermore, the KAPI system processes data derived from GPS signals that are received via an external GPS antenna which is a combined GPS receiving and GSM transmitting antenna for data transfer to the ground station.

The GPS/GSM antenna is mounted on a support bracket attached to the LH side support plate of the instrument panel. The KAPI unit which is the main item of the complete KAPI data logger system is installed on the other side of the LH side support of the instrument panel. The KAPI system also includes two additional sensor units, the airspeed and g-sensor, both of which are mounted with attachment angles on the base plate of the instrument panel behind the gyros.

Power is supplied directly to the sensors by the main KAPI unit and is integrated into its connection cable. The airspeed sensor is additionally connected to the pitot pressure system of the aircraft. Both electrical supply circuits of the KAPI system are protected by properly labeled fuses that are located in the engine compartment.

C. For more information on the KAPI Air Control FDR 07 Data Logger System, refer to the documentation and manuals of the manufacturer of the KAPI System.

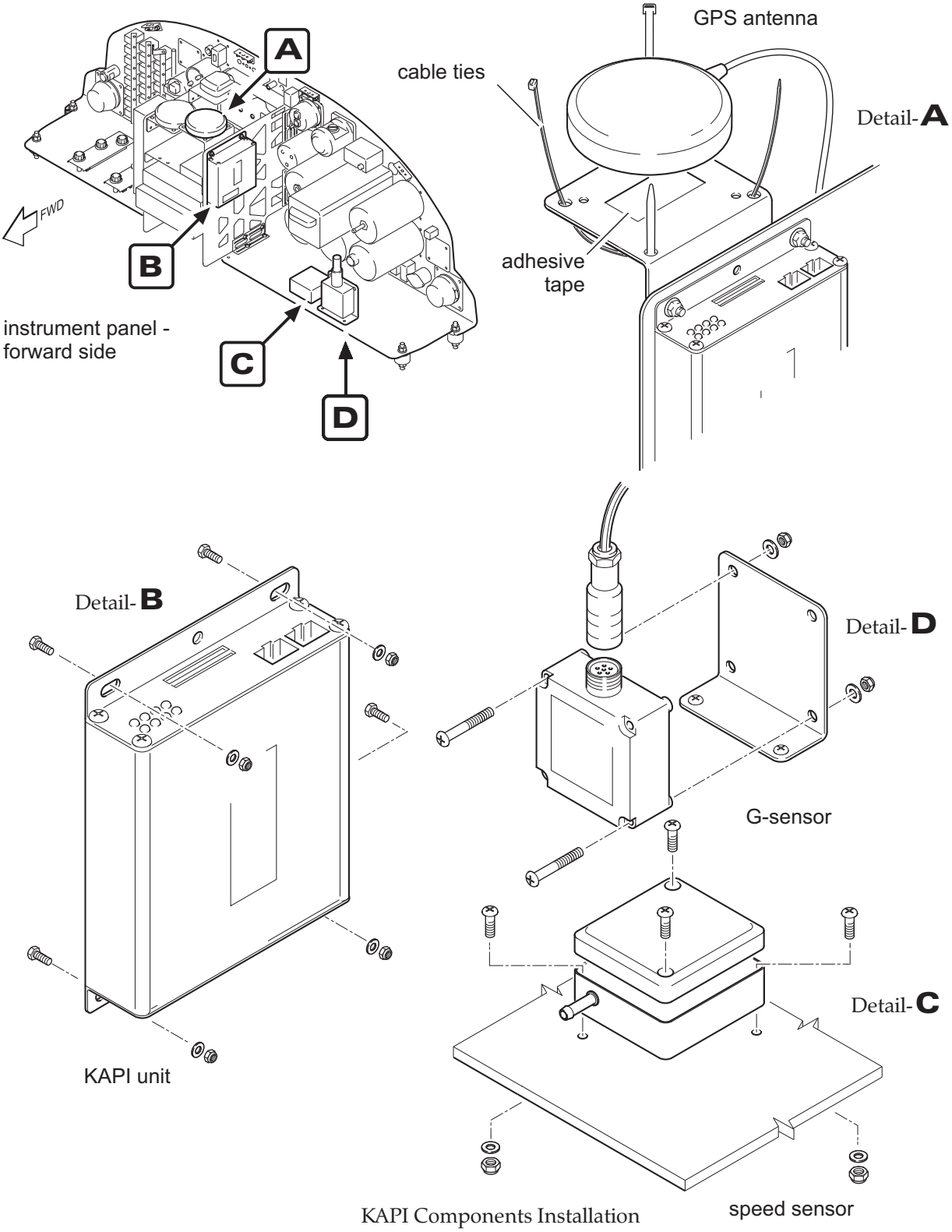


KAPI Components Installation
Figure 201

2. KAPI Unit Removal/Installation (Ref. Fig. 201)

A. Remove KAPI Unit
(1) Ensure electrical power to aircraft is OFF.
(2) Disconnect battery (refer to 24-30-00).
(3) Remove glare shield (refer to 31-10-00).
(4) Disconnect all plug connectors and cables. Mark the removed cables, as required, and the installation position of the unit.
(5) While supporting the KAPI unit, remove nuts and washers from the attachment screws and carefully remove KAPI unit from aircraft.

NOTE: The upper forward attachment screw of the KAPI unit constitutes the forward attachment point of the support bracket of the KAPI GPS/GSM antenna.

B. Install KAPI Unit
(1) Hold the KAPI unit correctly aligned in its installation position as previously marked and install all attachment screws, nuts and washers.
(2) Reconnect all required plug connectors and cables to the KAPI unit.
Make sure that all plugs and cables are properly connected.
(3) Install glare shield (refer to 31-10-00).
(4) Reconnect battery (refer to 24-30-00).
(5) Conduct a functional test of the installed unit.

3. KAPI GPS/GSM Antenna Removal/Installation (Ref. Fig. 201)

A. Remove KAPI GPS/GSM Antenna
(1) Ensure electrical power to aircraft is OFF.
(2) Disconnect battery (refer to 24-30-00).
(3) Remove glare shield (refer to 31-10-00).
(3) Disconnect antenna cable from KAPI unit and remove cable ties.
(4) Mark the installation position and remove the cable ties of the antenna attachment.
(5) Carefully remove antenna from aircraft.

NOTE: The antenna is additionally attached to the installation bracket by double-sided adhesive tape. Remove tape and adhesive residue with acetone.

B. Install KAPI GPS/GSM Antenna
(1) Put double-sided adhesive tape on the installation bracket of the GPS antenna and remove the protective film from the adhesive tape.
(2) Attach the antenna to the installation bracket in its correct installation position as previously marked and press it on the installation bracket. Secure the antenna on the bracket with 2 cross-wise mounted cable ties.
(3) Install the antenna cable properly and connect it to the KAPI unit.
(4) Install glare shield (refer to 31-10-00).
(5) Reconnect battery (refer to 24-30-00).
(6) Perform a functional check of the KAPI system.

4. KAPI Airspeed Sensor Removal/Installation (Ref. Fig. 201)

A. Remove KAPI Airspeed Sensor
(1) Ensure electrical power to aircraft is OFF.
(2) Disconnect battery (refer to 24-30-00).
(3) Remove glare shield (refer to 31-10-00).
(4) Disconnect pitot pressure line from the forward end of the sensor.

CAUTION: PLUG OR CAP THE SENSOR PORT AND THE END OF THE PRESSURE LINE IMMEDIATELY AFTER DISCONNECTION TO PREVENT DIRT OR FOREIGN OBJECTS ENTERING THE SENSOR OR PRESSURE SYSTEM.

(5) Disconnect the plug connector from the sensor. Mark the removed plug as required.
(6) Mark the installation position of the sensor and remove nuts and washers securing sensor.
(7) Carefully remove sensor from aircraft.

B. Install KAPI Airspeed Sensor
(1) Put sensor on instrument panel base plate and position it correctly as previously marked (pitot pressure port of the sensor has to point towards flight direction). The correct installation position of the sensor is vital for a correct data acquisition.
(2) Secure KAPI airspeed sensor in its installation position using screws, washers and nuts.
(3) Remove plugs/caps from sensor port and pitot pressure line. Reconnect pitot pressure line to the respective sensor port. Make sure that the pressure line is properly connected to the port and secure the connection with a cable tie.
(4) Connect the required plug connector to the sensor. Make sure that all plugs and cables are properly connected.
(5) Conduct a leak test of the pitot pressure system (refer to 34-11-00).
(6) Install glare shield (refer to 31-10-00).
(7) Reconnect battery (refer to 24-30-00).
(8) Perform a functional check of the KAPI system.

5. KAPI G-Sensor Removal/Installation (Ref. Fig. 201)

A. Remove KAPI G-Sensor
(1) Ensure electrical power to aircraft is OFF.
(2) Disconnect battery (refer to 24-30-00).
(3) Remove glare shield (refer to 31-10-00).
(4) Disconnect plug connector from sensor. Mark the removed plug as required.
(5) Mark installation position of the sensor and remove nuts and washers from sensor mounting.
(6) Carefully remove sensor from its installation position.

B. Install KAPI G-Sensor
(1) Place sensor on its mounting bracket and position it correctly as previously marked. The correct installation position of the sensor is vital for a correct data acquisition.
(2) Secure KAPI G-sensor on its installation bracket using attachment screws, washers and nuts.
(3) Connect plug connector to sensor. Make sure that the plug is properly connected.
(4) Install glare shield (refer to 31-10-00).
(5) Reconnect battery (refer to 24-30-00).
(6) Perform a functional check of the KAPI system.

# CHAPTER 32

# LANDING GEAR

## TABLE OF CONTENTS


| Title | Chapter Section Subject | Page | Effectifity |
|---|---|---|---|
| LANDING GEAR - GENERAL | 32-00-00 | 1 | |
| Introduction | 32-00-00 | 1 | |
| General Description | 32-00-00 | 1 | |
| MAIN LANDING GEAR - DESCRIPTION | 32-10-00 | 1 | |
| Introduction | 32-10-00 | 1 | |
| Description and Operation | 32-10-00 | 1 | |
| MAIN LANDING GEAR - MAINTENANCE | 32-10-00 | 201 | |
| Main Gear Leg Removal/Installation | 32-10-00 | 201 | |
| NOSE LANDING GEAR - DESCRIPTION | 32-20-00 | 1 | |
| Introduction | 32-20-00 | 1 | |
| Description and Operation | 32-20-00 | 1 | |
| NOSE LANDING GEAR - MAINTENANCE | 32-20-00 | 201 | |
| Nose Gear Leg Removal/Installation | 32-20-00 | 201 | |
| Wheel Fairing “High Speed” Removal/Installation | 32-20-00 | 201 | |
| WHEELS AND BRAKES - DESCRIPTION | 32-40-00 | 1 | |
| Introduction | 32-40-00 | 1 | |
| Description and Operation | 32-40-00 | 1 | |
| WHEELS AND BRAKES - MAINTENANCE | 32-40-00 | 201 | |
| Main Gear Wheel Removal/Installation | 32-40-00 | 201 | |
| Main Gear Wheel Disassembly/Assembly | 32-40-00 | 201 | |
| Nose Gear Wheel Removal/Installation | 32-40-00 | 203 | |
| Nose Gear Wheel Disassembly/Assembly | 32-40-00 | 203 | |
| Brake Master Cylinder Removal/Installation | 32-40-00 | 205 | |
| Brake Caliper Removal/Installation | 32-40-00 | 205 | |
| Brake Disc Removal/Installation | 32-40-00 | 207 | |
| Brake Lining Replacement | 32-40-00 | 207 | |
| Brake System Bleeding / Brake Fluid Change | 32-40-00 | 208 | |
| Adjustment/Test | 32-40-00 | 208 | |

# LANDING GEAR - GENERAL

1. Introduction

A. This chapter describes units and components which furnish a means of supporting and steering the aircraft on the ground, including the main and nose landing gears, brakes, wheels and tires.

2. General Description

A. The aircraft has a fixed tricycle landing gear with a steerable nose gear. The wheels are equipped with either "Highspeed" aerodynamic wheel fairings to decrease drag forces or "Softfield" wheel fairings to avoid soiling of the wing and fuselange.
The main gear struts are leaf springs which are attached to the center section of fuselage using two mounting brackets each. The nose gear is a tubular strut which is attached to the engine mount and linked through the rudder pedals to provide ground control. For shock absorption an elastomer package is installed between nose gear strut and nose wheel fork. Hydraulically actuated disc type brakes are installed on the inboard side of the main gear wheels.

B. Descriptive Data

| | |
|---|---|
| Tire type: | 6 ply |
| Wheelbase: | 1,685 m (5,53 ft) |
| Track width (max. fuel, no persons on board): | 1,938 m (6,36 ft) |
| Main tire size: | 5.00x5 |
| Nose tire size: | 5.00x5 |
| Main tire pressure: | 2,5 bar (36 psi) |
| Nose tire pressure: | 2,0 bar (29 psi) |
| Max. nose gear wheel fork deflection: | +/- 20° |
| Max. brake system operating pressure: | 69 bar (1000 psi) |

## MAIN LANDING GEAR - DESCRIPTION

1. Introduction

   A. The main landing gear consists of the main landing gear struts, the wheels with brakes and the wheel fairings. The wheel fairings are standard equipment. The main gear struts are cantilever spring legs made of spring steel and carry the landing loads. The aircraft is serially equipped with disc type brakes.

2. Description and Operation

   A. Each main landing gear strut is attached to the fuselage structure by means of two aluminum mounting brackets. These brackets are bolted to the main landing gear ribs, which are bonded into the fuselage belly.
   The struts are mounted to the inner bracket with a special single bolt. The outer mounting bracket consists of two parts; the upper part on top of the main strut and the lower retaining bar below the main strut. The retaining bar is attached to the upper part of the bracket with two bolts. This arrangement ensures correct absorption of the landing loads, similar to a rocker plate.
   To prevent chafing damage and to allow angular movement of the struts, synthetic rubber inserts have been installed between the contact surfaces.
   The wheel axle is attached to the lower end of the landing gear strut with four bolts.
   A mounting plate for the wheel fairing is installed on the inboard side of the lower end of each main landing gear strut using the bolts to secure the wheel axle to strut.

## MAIN LANDING GEAR - MAINTENANCE

1. Main Gear Leg Removal/Installation

A. Remove a Main Gear Leg
(1) Gain access to the appropriate landing gear mounting brackets (refer to 25-00-00).
(2) Lift aircraft (refer to 07-10-00).
(3) Remove screws/nut securing wheel fairing to wheel assembly and remove fairing.
(4) Remove brake line and brake caliper from main gear leg (refer to 32-40-00).
(5) Remove grounding connection from inboard end of the main gear leg.
(6) Remove bolt and nut attaching inboard end of main gear leg to inner mounting bracket.
(7) Loosen two bolts securing main gear leg retainer clamp to outer mounting bracket.
(8) Pull main gear leg from fuselage.

B. Install a Main Gear Leg
(1) Slide main gear leg into place so the leg retainer clamp is supporting the leg.
(2) Install bolt attaching inboard end of main gear leg to inner mounting bracket in the fuselage belly. Ensure flexible washers and washers are in correct position. Torque to to 45 Nm (398 in.lbs).
(3) Tighten two bolts securing main gear leg retainer clamp to outer mounting bracket.
(4) Reconnect grounding connection to inboard end of the main gear leg.
(5) Reinstall brake caliper, brake line and wheel (refer to 32-40-00).
(6) Reinstall wheel fairing.
(7) Test brake system and ensure brakes are operating properly (refer to 32-40-00).

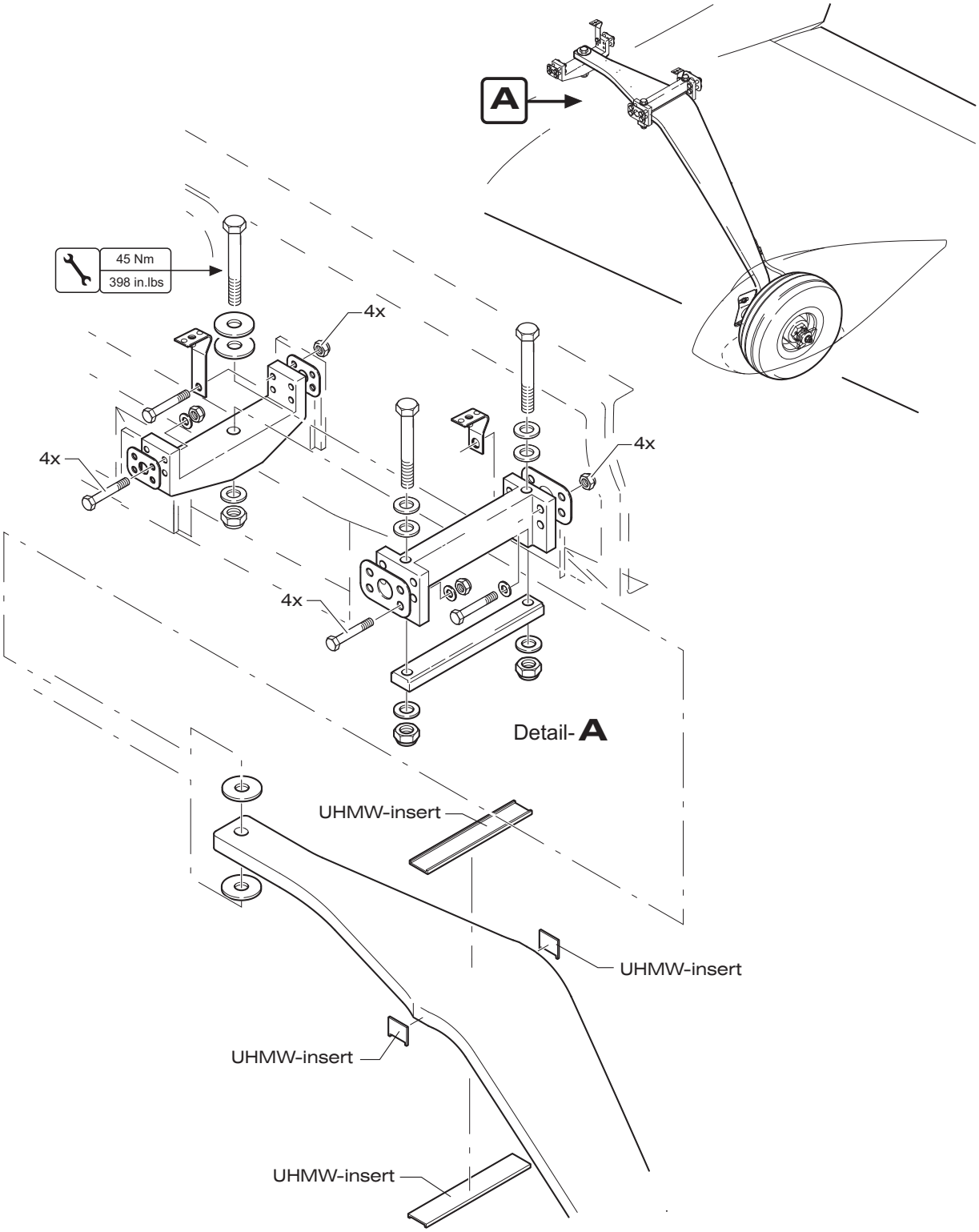


Main Gear Leg Installation
Figure 201

## NOSE LANDING GEAR - DESCRIPTION

1. Introduction

   A. The aircraft has a steerable nose landing gear which is equipped with a shock absorber and wheel fairing.

2. Description and Operation

   A. The nose gear consists of a welded tubular steel strut pivotally attached to the engine mount. The forward bottom end of the nose gear strut has a horizontal pivot for the nose wheel fork. The nose wheel fork with the nose gear wheel can thus only move up and down.
   Shock absorption is provided by a shock absorber unit equipped with stacked rubber disks, which is installed between nose wheel fork and nose gear strut.
   Nose wheel steering is accomplished through use of the rudder pedals. Spring loaded steering rod assemblies connect the nose gear steering arm at the upper end of the nose gear strut to arms on the rudder pedals. Steering is afforded up to approximately 20 degrees each side of neutral.

## NOSE LANDING GEAR - MAINTENANCE

1. Nose Gear Leg Removal/Installation (Figure 201)

   A. Remove Nose Gear Leg
      (1) Jack aircraft or weight tail of aircraft to raise nose wheel (refer to 07-00-00).
      (2) Remove engine cowling (refer to 71-10-00).
      (3) Disconnect retaining springs at the nose gear steering arm.
      (4) Disconnect steering rod assemblies at nose gear steering arm.
      (5) Remove nut securing upper end of the nose gear strut to engine mount.
      (6) Remove pivot bolt securing nose gear strut assembly to the engine mount at the bracket.
      (7) Remove nose gear leg from the aircraft downwards.

   B. Install Nose Gear Leg
      (1) Place nose gear leg in position.
      (2) Install pivot bolt securing nose gear strut assembly to the engine mount at the bracket.
      (3) Install nut securing upper end of the nose gear strut to engine mount.
      (4) Connect steering rod assemblies to the nose gear steering arm.
      (5) Connect retaining springs to the nose gear steering arm.
      (6) Install engine cowling (refer to 71-10-00)

2. Wheel Fairing "High Speed" Removal/Installation

   NOTE: The threaded pins are secured to the nose wheel fork with high strength threadlocker (Loctite 648 or equivalent) and should protrude the nose wheel for by approx. 13 mm (upper pins) resp. 16 mm (lower pins). The threaded pins don't need to be removed for wheel fairing removal/installation.

   A. Remove Wheel Fairing
      (1) Remove nuts and washers securing wheel fairing to nose wheel fork.
      (2) Carefully bend apart and remove front part of the wheel fairing over threaded pins.
      (3) Carefully bend apart and remove rear part of the wheel fairing over threaded pins.

   B. Install Wheel Fairing
      (1) Place rear part of the wheel fairing in position. Carefully bend apart wheel fairing and install over threaded pins.
      (2) Place front part of the wheel fairing in position. Carefully bend apart wheel fairing and install over threaded pins.
      (3) Secure wheel fairing using washers and nuts.

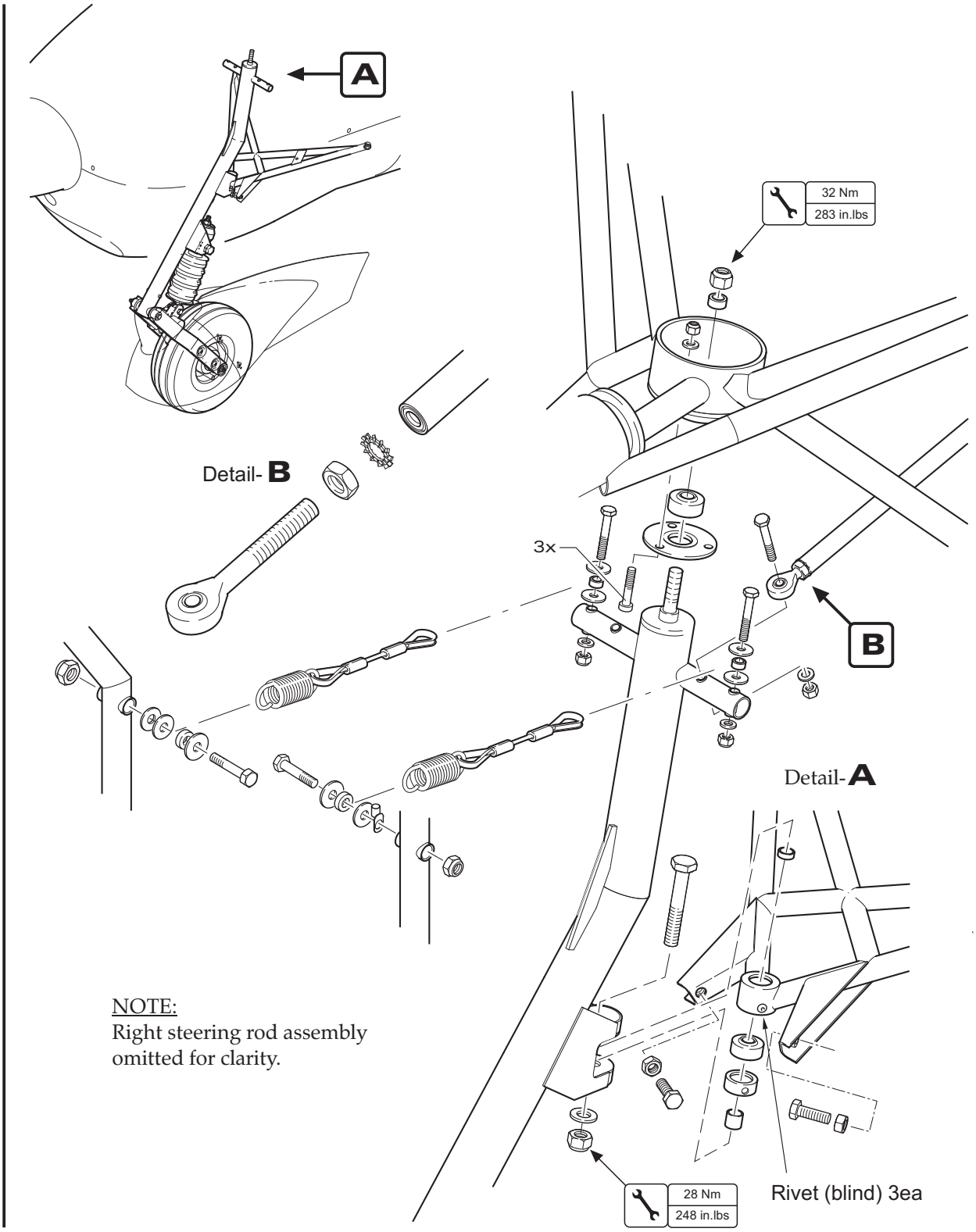


Nose Gear Leg Installation
Figure 201

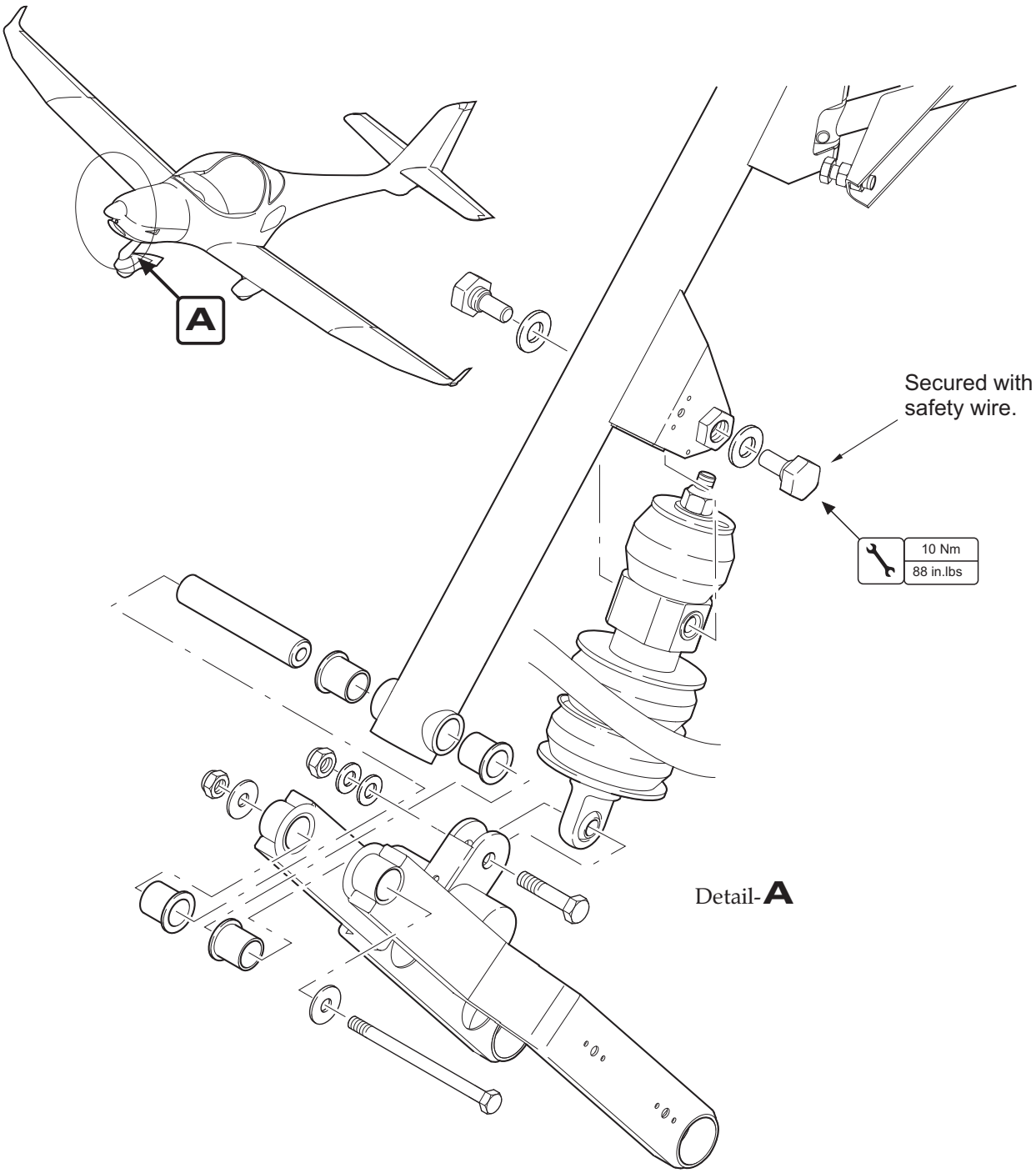


Damper Assy and Nose Wheel
Fork Installation
Figure 202

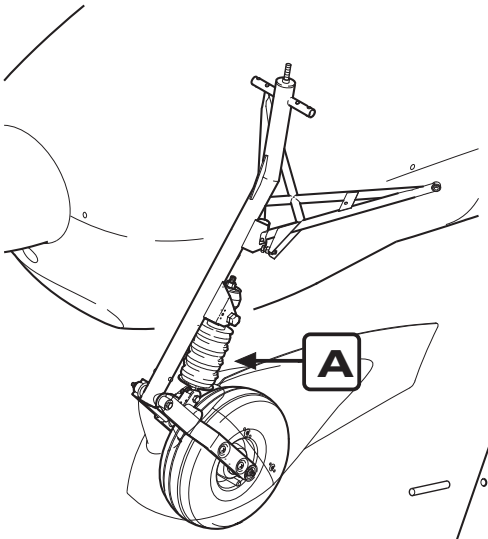


NOTE:
Damper assembly with 4 rubber elements shown.
If a reinforced nose wheel fork is installed, a damper assembly with 3 rubber elements has to be used (refer to SB-AT01-037).

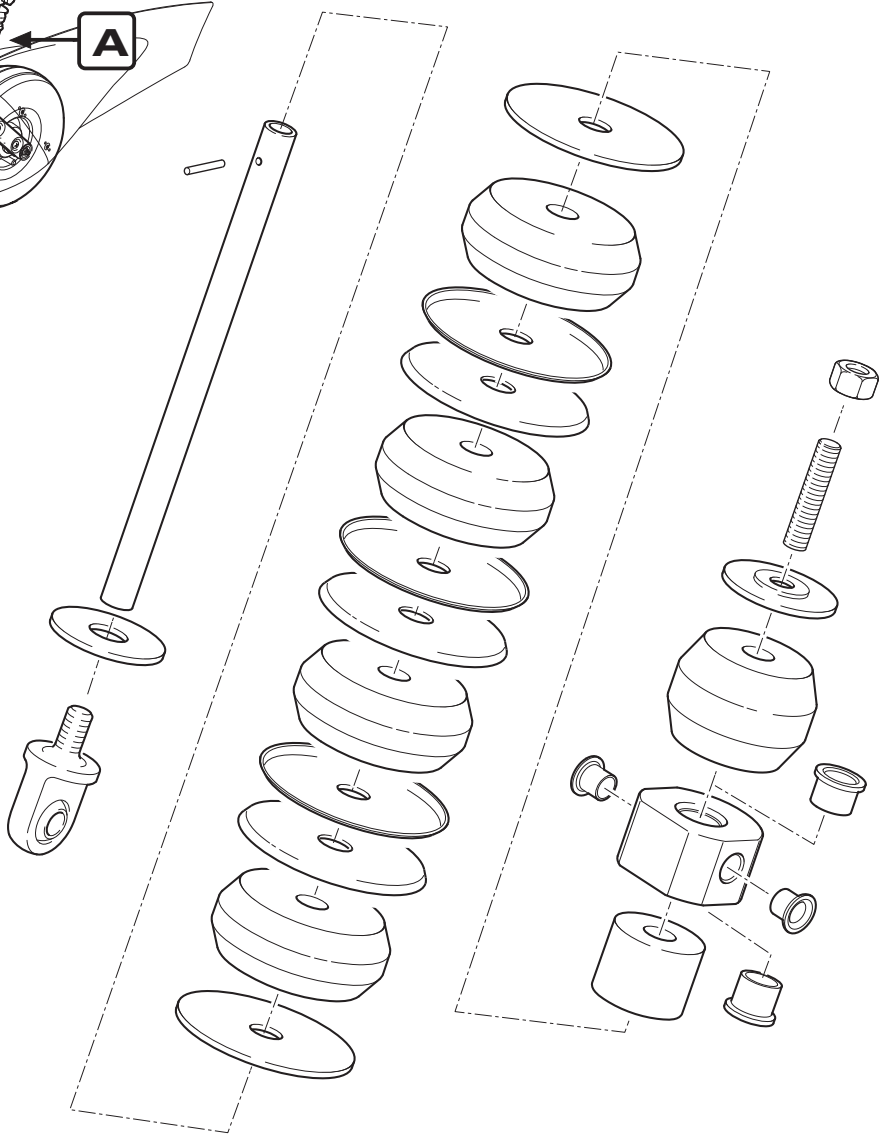

Detail- **A**

Damper Assembly
Figure 203

## WHEELS AND BRAKES - DESCRIPTION

1. Introduction

   A. Nose and main landing gear wheels are of conventional design.
   The wheels of the main landing gear are each equipped with a single brake disc, floating cylinder brake assembly.

   B. For tire specifications, refer to "Landing Gear - General".

   C. For more detailed information on Cleveland wheels and brakes, refer to Cleveland Wheels & Brakes component maintenance manual, P/N AWBCMM0001, latest revision.

2. Description and Operation

   A. The main gear wheels consist of the two wheel halves, the tubing, and the tire. The brake disc is bolted to the inboard wheel side. The tire valve is on the outboard wheel side. There are two sets of roller bearings in each wheel, one on the inboard wheel half and one on the outboard wheel half.
   The nose gear wheel construction is the same as that of the main gear wheels but without a brake disc.

   B. The brake system comprises single disc, hydraulically actuated brakes on each main landing gear wheel, four master cylinders, linked with the rudder pedals, a brake fluid reservoir on the left cabin wall in front of the firewall, and brake fluid lines and hoses.

   The brakes are operated by pushing the upper part of either the left or right rudder pedal- in either pilot position. Each set of rudder pedals is interconnected. This motion is mechanically transmitted to the respective brake master cylinder, and through brake fluid lines and hoses out to the respective hydraulic brake assembly.

## WHEELS AND BRAKES - MAINTENANCE

1. Main Gear Wheel Removal/Installation

A. Remove a Main Gear Wheel
(1) Jack aircraft or appropriate main gear wheel (refer to 7-00-00).
(2) Remove screws securing wheel fairing and remove wheel fairing.
(3) Remove bolts securing brake back plate to brake caliper. Remove back plate.
(4) Remove wheel axle nut.
(5) Pull wheel from axle.

B. Install a Main Gear Wheel
(1) Slide the wheel assembly on to the axle, with the brake disc inboard and the valve stem outboard.
(2) Install axle nut and finger-tighten. Then, while slowly continuing to tighten with a wrench, simultaneously rotate the wheel assembly by hand. Tighten until a slight resistance in the wheel bearings is obvious. Back off nut to nearest castellation and install cotter pin.

NOTE: When the axle nut is set in its final position, there should be no resistance to rotation and no side-to-side play in the wheel bearings.

(4) Position brake back plate between brake disc and inboard wheel hub and secure using bolts and washers.
(5) Install wheel fairing.

2. Main Gear Wheel Disassembly/Assembly

A. Disassemble a Main Gear Wheel

WARNING: DO NOT ATTEMPT TO SEPARATE WHEEL HALVES BEFORE WHEEL AND TUBE ARE COMPLETELY DEFLATED.

(1) Completely deflate tire and tube, and break loose tire bead.
(2) Remove bolts to separate wheel halves and brake disc.
(3) Remove wheel halves and brake disc from tire.
(4) Remove tube from tire.
(5) If necessary remove wheel bearing assembly from wheel halves.

B. Assemble a Main Gear Wheel
(1) If removed, install wheel bearing assembly to wheel halves.
(2) Insert tube into tire with the valve stem aligned with the painted reference mark on the tire. Inflate the tube with just enough pressure to give it shape inside the tire.
(3) Insert the two wheel halves into the tire, taking care to avoid pinching the tube between them. Guide the valve stem through the rubber-grommeted hole in the outboard wheel half while bringing the halves together.

NOTE: When the wheel halves are joined, it is recommended to double check that the tube isn't pinched, using an inspection mirror and a flashlight.

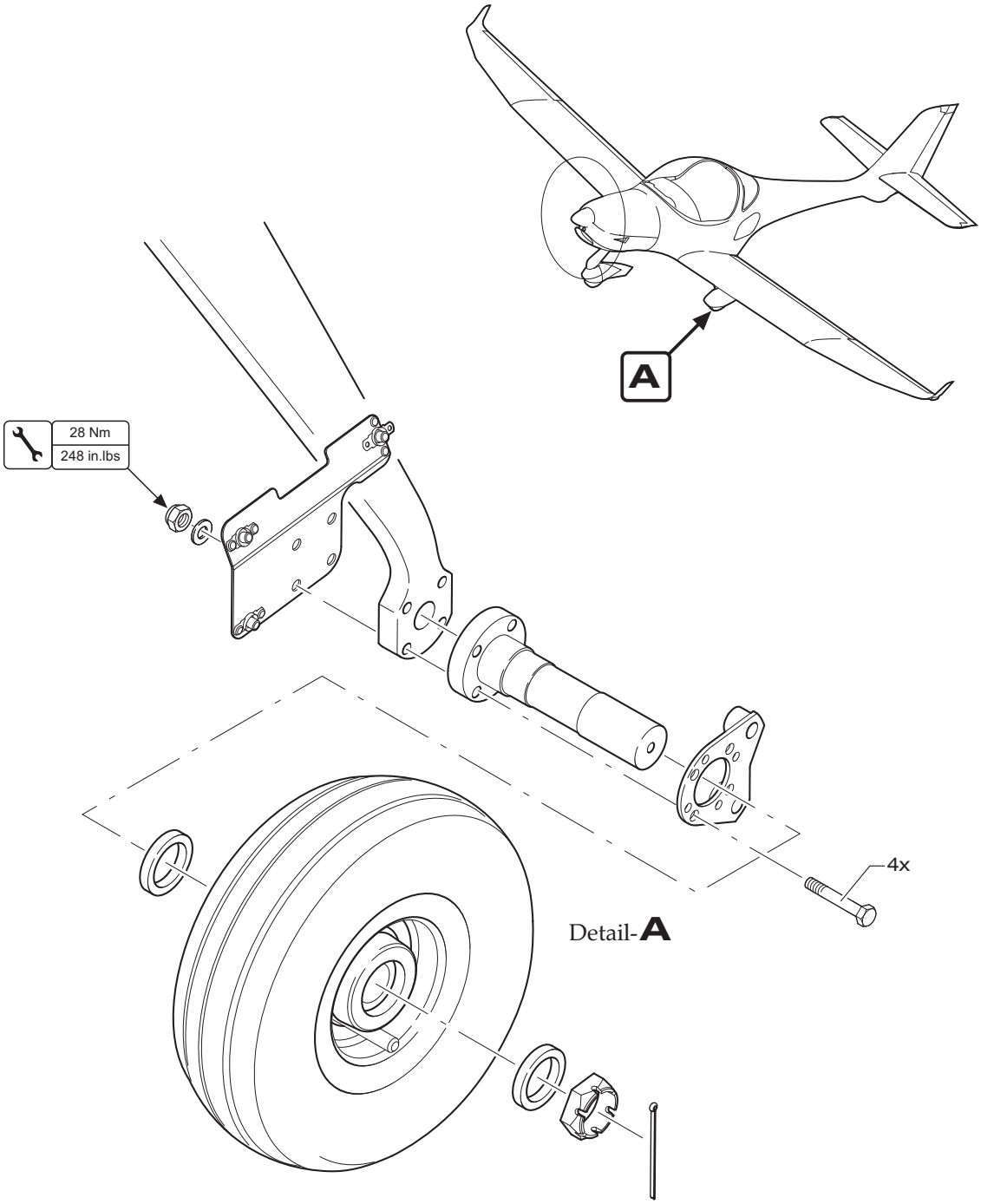


Main Gear Wheel Installation
Figure 201

(4) Reassemble the wheel unit, including the brake disc, with bolts, washers, and nuts. Torque to 10 - 12 Nm (89 - 106 in.lbs.).
(5) Inflate the tire as required (refer to "Landing Gear - General").

3. Nose Gear Wheel Removal/Installation

A. Remove Nose Gear Wheel
(1) Jack aircraft or weight tail of aircraft to raise nose wheel (refer to 07-00-00).
(2) Remove screws securing wheel fairing and remove wheel fairing.
(3) Remove axle bolt from wheel fork.
(4) Remove cap bushings from wheel fork arms.
(5) Remove nose wheel assembly backwards from wheel fork.

B. Install Nose Gear Wheel
(1) Slide the whole wheel assembly (with axle, spacers, and washers in position) between wheel fork arms.
(2) Insert cap bushings into wheel fork arms.
(3) Insert axle bolt and torque nut until slight bearing drag, when the wheel is rotated. Then, turn back nut to nearest castellation and install pin.

NOTE: When the axle bolt nut is set in its final position, there should be no resistance to rotation and no side-to-side play in the wheel bearings.

(4) Install wheel fairing.

4. Nose Gear Wheel Disassembly/Assembly

A. Disassemble Nose Gear Wheel
(1) Remove spacers, washers, and axle from wheel.

WARNING: DO NOT ATTEMPT TO SEPARATE WHEEL HALVES UNTIL WHEEL AND TUBE ARE COMPLETELY DEFLATED.

(2) Completely deflate tire and tube and break loose tire bead.
(3) Remove bolts to separate wheel halves.
(4) Remove wheel halves from tire.
(5) Remove tube from tire.
(6) If necessary remove wheel bearing assembly from wheel halves.

B. Assemble Nose Gear Wheel
(1) If removed, install wheel bearing assembly to wheel halves.
(2) Insert tube into tire with the valve stem aligned with the painted reference mark on the tire. Inflate the tube with just enough pressure to give it shape inside the tire.
(3) Insert the two wheel halves into the tire, taking care to avoid pinching the tube between them. Guide the valve stem through the rubber-grommeted hole in the outboard wheel half while bringing the halves together.

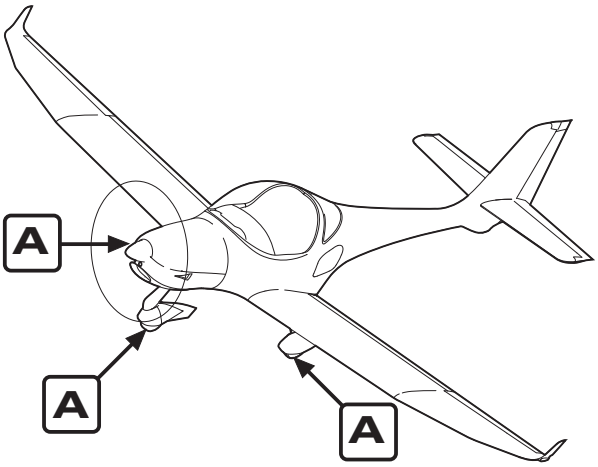


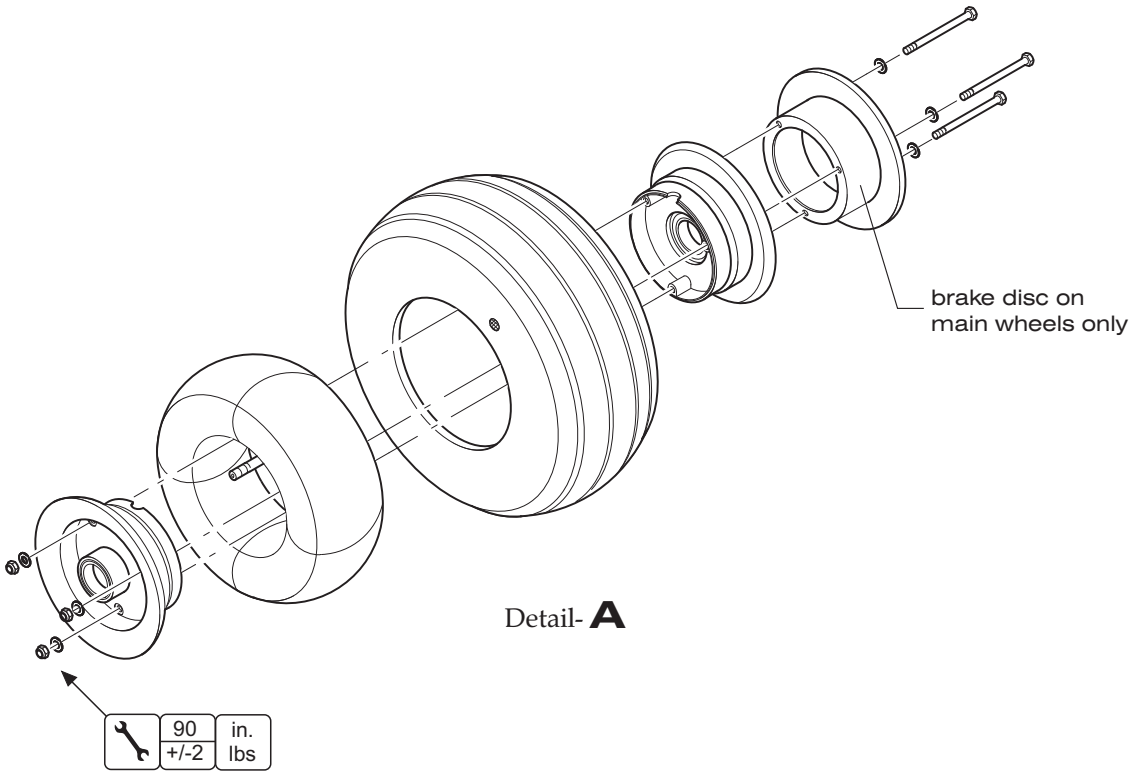


Wheel Assembly
Figure 202

NOTE: When the wheel halves are joined, it is recommended to double check that the tube isn't pinched, using an inspection mirror and a flashlight.

(4) Reassemble the wheel unit with bolts, washers, and nuts. Torque to 10 - 12 Nm.
(5) Inflate the tire as required (refer to "Landing Gear General").
(6) Insert wheel axle and place washers and spacers onto the axle.

5. Brake Master Cylinder Removal/Installation

WARNING: CONTACT WITH HYDRAULIC FLUID CAN CAUSE SKIN IRRITATIONS.

CAUTION: EXCESSIVE HYDRAULIC FLUID WILL ATTACK THE SURFACE OF VARIOUS MATERIALS. READ AND ADHERE TO ALL MANUFACTURER'S INSTRUCTIONS. PROVIDE A SUITABLE COLLECTING VESSEL FOR HYDRAULIC FLUID.

A. Remove a Brake Master Cylinder
(1) Remove bleeder fitting at wheel brake caliper and drain hydraulic fluid from brake cylinder.
(2) Disconnect brake cylinder from rudder pedal assembly.
(3) Disconnect hydraulic brake line hoses from cylinder and remove brake cylinder.
(4) Plug or cap hydraulic fittings, hoses and lines to prevent contaminants entering.

NOTE: Brake master cylinder repair should be accomplished according to manufacturer's specifications.

B. Install a Brake Master Cylinder
(1) Connect hydraulic hoses to brake master cylinder.
(2) Put brake master cylinder in position and connect cylinder to rudder pedal assembly.
(3) Install bleeder fitting at wheel brake caliper.
(4) Refill and bleed brake system (refer to "Brake System Bleeding" below).
(5) Test brake system and ensure brakes are operating properly (refer to "Adjustment/Test").

6. Brake Caliper Removal/Installation

WARNING: CONTACT WITH HYDRAULIC FLUID CAN CAUSE SKIN IRRITATIONS.

CAUTION: EXCESSIVE HYDRAULIC FLUID WILL ATTACK THE SURFACE OF VARIOUS MATERIALS. READ AND ADHERE TO ALL MANUFACTURER'S INSTRUCTIONS. PROVIDE A SUITABLE COLLECTING VESSEL FOR HYDRAULIC FLUID.

A. Remove a Caliper
(1) Disconnect brake line at brake caliper and immediately plug or cap hydraulic fitting and brake line.
(2) Remove bolts securing the back plate to caliper casing.
(3) Remove back plate and slide caliper casing with pressure plate away from the wheel.

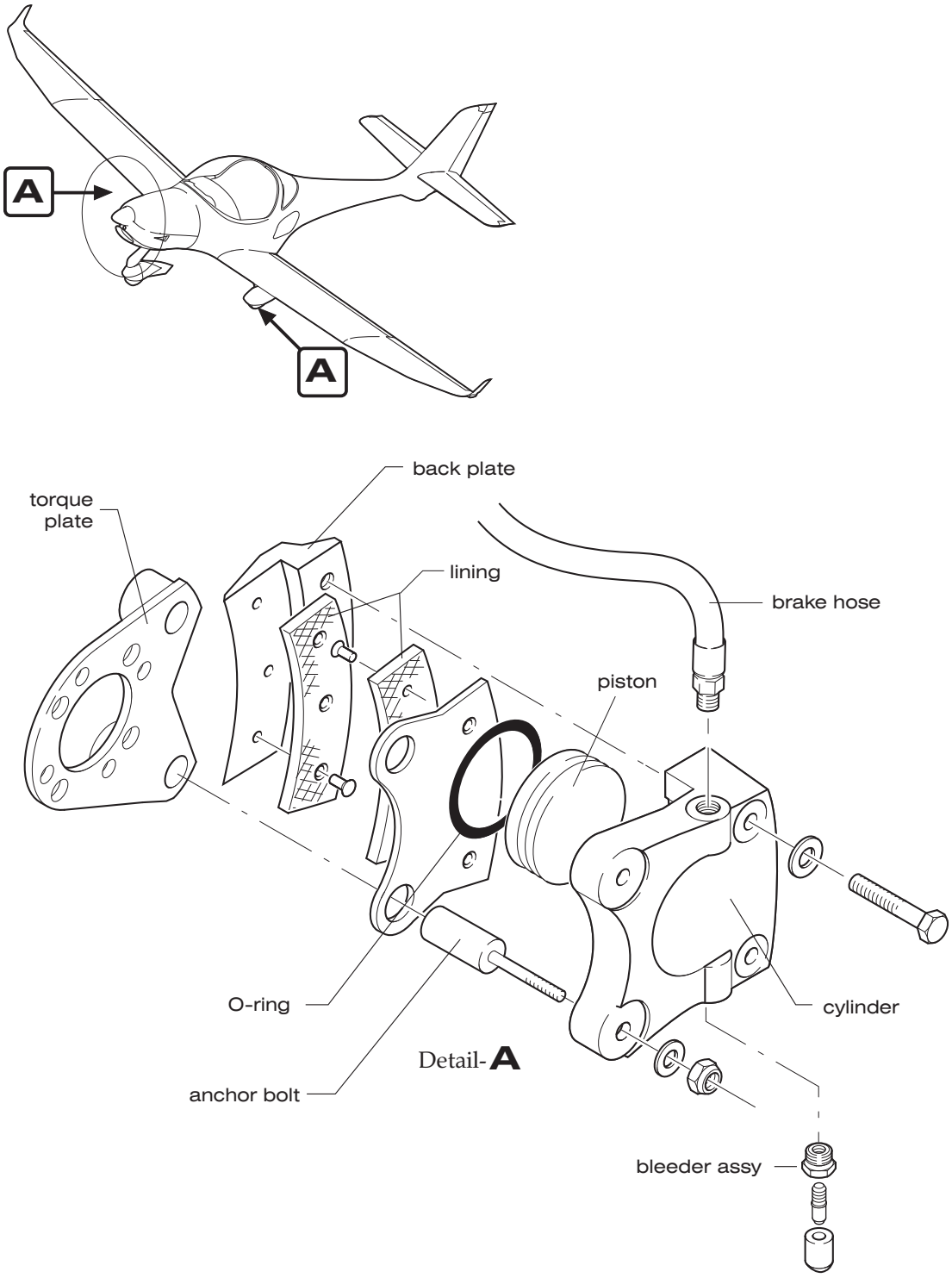


Brake Caliper Assembly
Figure 203

B. Install a Caliper
   (1) Slide the caliper casing anchor pins into the torque plate bushings until the lining on the pressure plate contacts the brake disc.
   (2) Position the back plate against the other side of the disc and thread the two caliper casing bolts with their washers into the back plate from opposite side of the caliper casing. Tighten bolts to 90 in.lbs..
   (3) Safety-wire the bolts.
   (4) Reconnect brake line to caliper.
   (5) Refill if necessary, and bleed brake system (refer to "Brake System Bleeding" below).
   (6) Test brake system and ensure brakes are operating properly (refer to "Adjustment/Test").

7. Brake Disc Removal/Installation

A. Remove a Brake Disc
   (1) Remove main gear wheel from main gear strut (refer to "Main Gear Wheel Removal/Installation" above).
   (2) Disassemble main gear wheel (refer to "Main Gear Wheel Disassembly/Assembly" above).
   (3) Remove brake disc.

B. Install a Brake Disc

NOTE: Before re-installing the brake disc, inspect it for camber and excessive scoring. Scoring should not deeper than 0,5 mm (0.02 in.).

   (1) Install brake disc (refer to "Main Gear Wheel Disassembly/Assembly" above).

8. Brake Lining Replacement

Minimum permissible brake lining thickness is 2,5 mm (3/32 in.).

A. Remove Brake Linings
   (1) Remove caliper from main gear wheel (refer to "Brake Caliper Removal/Installation" above).
   (2) Slide pressure plate off anchor pins of the brake caliper casing assembly.
   (3) Place the back plate or pressure plate on a vice with the lining material down and with the rivets positioned over gap between the vice jaws. Drive the rivets out using a hammer and a punch.

B. Install Brake Lining
   (1) Position the new lining material against the back plate or the pressure plate, making sure that the counter-bores on both pieces are facing outward (away from each other).
   (2) Insert a rivet into each of the holes in the lining material with the head of the rivet fitting into the counter-bore in the lining.
   (3) Place the plate and lining into a brake lining installation fixture with the head of the rivet down against the bucking anvil of the tool. Insert the rivet setting mandrel into the fixture with the mandrel contacting the rivet tail.
   (4) Support the plate and the lining in the installation fixture with one hand while tapping the mandrel with a hammer. Proceed slowly and rotate the assembly while driving the rivet so that the tail is evenly formed.

NOTE: Before setting the first rivet fully, start the other rivets to keep the lining aligned properly with the plate.

(5) Set all the rivets fully.
(6) Slide the pressure plate with its new lining material over the caliper casing anchor pins.
(7) Reinstall caliper from main gear wheel (refer to "Brake Caliper Removal/Installation" above).

9. Brake System Bleeding / Brake Fluid Change

To bleed the brakes or change the brake fluid, use a fluid pump, a clear tube, and a collecting container. Only hydraulic fluid fulfilling the MIL-H-5606 specification should be used.

WARNING: CONTACT WITH HYDRAULIC FLUID CAN CAUSE SKIN IRRITATIONS.

CAUTION: EXCESSIVE HYDRAULIC FLUID WILL ATTACK THE SURFACE OF VARIOUS MATERIALS. READ AND ADHERE TO ALL MANUFACTURERS INSTRUCTIONS. PROVIDE A SUITABLE COLLECTING VESSEL FOR HYDRAULIC FLUID.

CAUTION: PROTECT THE DISC AND PADS FROM BRAKE FLUID CONTAMINATION. BRAKE PADS ARE POROUS AND CANNOT BE CLEANED IF CONTAMINATED, THEY MUST BE REPLACED BY NEW ONES.

A. Bleeding Procedure
(1) Connect fluid pump to the brake caliper bleeder fitting.
(2) Connect collecting container with clear tube to brake fluid reservoir.
(3) Open the bleeder and pump fluid from the caliper through the master cylinders to the reservoir until no air bubbles are evident in the reservoir (clear tube). Then, tighten the bleeder fitting.
(4) Repeat for both brake calipers.
(5) Test brake system and ensure brakes are operating properly (refer to "Adjustment/Test" below).

B. Brake Fluid Change Procedure
(1) Remove bleeder fitting at wheel brake caliper and drain hydraulic fluid.
(2) Operate the pilot's brake pedal to remove remaining brake fluid from the system.
(3) Refill and bleed brake system as described above.
(4) Repeat for both brake calipers.

10. Adjustment/Test

A. There is no need to adjust the brakes as the brake pistons move to compensate for brake and wear.

B. After component replacement or repair:
(1) Check the brakes for firm pedal pressure and bleed the system if either brake feels spongy.
(2) Perform a minimum of six stops from a speed of between 25 and 40 knots, using light pedal effort and letting the brakes cool partially (about one minute) between stops. Check the aircraft is not turning from centerline while apply left and right brakes uniformly.
(3) Check all fittings and hoses for any leakage.

# CHAPTER 33

# LIGHTS

## TABLE OF CONTENTS


| Title | Chapter Section Subject | Page | Effectivity |
|---|---|---|---|
| LIGHTS - GENERAL | 33-00-00 | 1 | |
| Introduction | 33-00-00 | 1 | |
| General Description | 33-00-00 | 1 | |
| INTERIOR LIGHTS - MAINTENANCE | 33-10-00 | 201 | |
| General | 33-10-00 | 201 | |
| Post Light Removal/Installation | 33-10-00 | 201 | |
| Nulite Removal/Installation | 33-10-00 | 201 | |
| Cockpit Light Removal/Installation | 33-10-00 | 202 | |
| EXTERIOR LIGHTS - MAINTENANCE | 33-40-00 | 201 | |
| General | 33-40-00 | 201 | |
| Landing Light Removal/Installation/Check | 33-40-00 | 201 | |
| Navigation/Position Light Bulb Replacement | 33-40-00 | 202 | Whelen lights |
| Flash Tube Assembly Replacement | 33-40-00 | 202 | Whelen lights |
| Anti-Collision Strobe Light Assembly Removal/Installation | 33-40-00 | 202 | Whelen lights |
| Strobe Light Module Removal/Installation | 33-40-00 | 202 | Whelen lights |
| Navigation/Position/Anti-Collision Light Removal/Installation/Check | 33-40-00 | 202 | Aveo lights |

# LIGHTS - GENERAL

1. Introduction

   A. This chapter describes interior and exterior lighting systems used on the aircraft, including removal and installation procedures of components and light bulb replacement instructions.

2. General Description

   A. A cockpit light is installed for general cabin lighting, for emergency instrument panel lighting and as a reading light. The dimmable and swivel cockpit light is located in the roof of the cabin just behind the seats. The light is controlled through a dimmer switch on the light.

   The voltmeter, the ammeter, the oil temperature, the oil pressure and the cylinder head temperature indicators as well as most of the avionic equipment are internally lighted. Refer to appropriate manufacturer's publications for maintenance instructions.
   In aircraft equipped for Night-VFR additional instrument and panel lighting is installed:
   If instruments do not have internal lighting they are illuminated by post lights or Nulites. As a second source of light a LED row is integrated into the instrument panel cover. Both, LED row and Nulites / post lights are controlled by a separate dimmer.
   To avoid shadowing on placards there is a placard bar below the switches on the bottom of the instrument panel. For emergency lighting there are flashlights and all placards are luminescent.

   B. Exterior lighting consists of wing tip navigation lights with integral anti-collision strobe lights and position lights and a single landing light.

## INTERIOR LIGHTS - MAINTENANCE

1. General

A. If instruments do not have internal lighting, they are illuminated by post lights or Nulites. Post lights are LED lights that illuminate the instrument panel and function as instrument mounting bolts. Nulites are installed between the instrument and the instrument panel. They have a special bezel that focuses the light toward the instrument. Maintenance of post lights and Nulites is limited to their removal and installation.

B. In Night-VFR equipped aircraft a LED row is integrated into the instrument panel cover. The row is bonded to the instrument panel cover and therefore cannot be replaced or removed. Refer to 31-10-00 for glare shield removal/installation procedures.

C. A cockpit light is installed in the roof of the cabin just behind the seats. Maintenance is limited to the removal/installation of the light.

2. Post Light Removal/Installation

A. Remove Post Light
(1) Ensure electrical power to aircraft is OFF.
(2) Disconnect battery (refer to 24-30-00).
(3) Remove glare shield (refer to 31-10-00).
(4) Disconnect electrical connector at back of post light.
(5) Remove washer and nut securing post light to instrument panel and remove cable shoe and post light.

B. Install Post Light
(1) Put post light and cable shoe in position and secure using washer and nut.
(2) Connect electrical connector at back of post light.
(3) Install glare shield (refer to 31-10-00).
(4) Reconnect battery (refer to 24-30-00).
(5) Perform functional check.

3. Nulite Removal/Installation

A. Remove Nulite
(1) Ensure electrical power to aircraft is OFF.
(2) Disconnect battery (refer to 24-30-00).
(3) Remove glare shield (refer to 31-10-00).
(4) Cut electrical wires to Nulite .
(5) Remove affected instrument as described in the appropriate chapter of this manual.
(6) Remove Nulite.

B. Install Nulite
   (1) Put Nulite in position between the instrument panel and the instrument with the wires coming out of the top.
   (2) Install affected instrument as described in the apropriate chapter of this manual.
   (3) Reconnect wires to Nulite using crimp seal butt connector. Secure with cable ties.
   (4) Install glare shield (refer to 31-10-00).
   (5) Reconnect battery (refer to 24-30-00).
   (6) Perform functional check.

4. Cockpit Light Removal/Installation

A. Remove Cockpit Light
   (1) Ensure electrical power to aircraft is OFF.
   (2) Disconnect electrical wires at connector.
   (3) Remove screws securing light to headset bracket and remove light.

B. Install Cockpit Light
   (1) Put light in position and secure to the headset bracket using screws, washers and nuts.
   (2) Reconnect electrical wires at connector.
   (3) Perform functional check.

## EXTERIOR LIGHTS - MAINTENANCE

1. General

A. The maintenance of exterior lights is limited to the removal and installation of components and light bulb replacement.

B. The navigation / anti-collision lights installed are produced either by Whelen Engineering or Aveo Engineering. Whelen lights are available either with or without LED navigation lights. Aveo lights use LED's for navigation, position and anti-collision lights.

C. The illumination unit of the LED versions cannot be repaired. If one LED of the cluster has failed the complete illumination unit has to be replaced.

2. Landing Light Removal/Installation/Check

A. Remove Landing Light
(1) Ensure electrical power to aircraft is OFF.
(2) Remove upper cowling (refer to 71-10-00)
(3) Disconnect landing light electrical wires at connector.
(4) Remove screws securing landing light to cowling and remove landing light from aircraft.

B. Install Landing Light
(1) Put landing light in position in the cowling and secure using screws.
(2) Reconnect landing light electrical wires at connector.
(3) Perform functional check, adjust landing light if necessary (refer to “Inspection/Check” below).
(4) Install upper cowling (refer to 71-10-00).

C. Landing Light Inspection/Check
(1) Turn BAT switch ON.
(2) Turn LDG light ON.
(3) Verify the landing light works properly.
(4) Turn OFF all switches.

3. Navigation / Position Light Bulb Replacement

CAUTION: DO NOT ALLOW THE GLASS PORTION OF THE LIGHT BULB TO COME IN CONTACT WITH EXPOSED SKIN.
PAY ATTENTION WHILE DISASSEMBLING ANTI-COLLISION STROBE LIGHT ASSEMBLY TO PREVENT GLASS LENSES FROM DROPPING DOWN.

NOTE: Not applicable for the LED version of the navigation / position light.

A. Navigation / Position Light Bulb Replacement
(1) Ensure electrical power to aircraft is OFF.
(2) Remove screws securing lens retainer to base plate. Carefully remove lens retainer and lenses.
(3) Take a hold of the navigation light bulb, depress slightly and turn counterclockwise to release bulb from bayonet mount.
(4) To remove the position light bulb, pull it straight out of the socket.
(5) Place the navigation light bulb into the bayonet socket, depress, and gently turn clockwise until bulb seats in socket.
(6) To install the position light bulb, push it straight into the socket.
(7) Put all lenses in position and secure using lens retainer and screws.
(8) Perform navigation/position light functional test (refer to “Inspection/Check” below).

B. Navigation / Position Lights Inspection/Check
(1) Turn BAT switch ON.
(2) Turn NAV light switch ON.
(3) Verify that the navigation / position lights work properly.
(4) Turn OFF all switches.

4. Flash Tube Assembly Replacement

WARNING: HIGH VOLTAGE! MAKE SURE THAT ELECTRICAL POWER TO STROBE LIGHT SYSTEM IS OFF.

(1) Ensure electrical power to aircraft is OFF.
(2) Disconnect battery (refer to 24-30-00).
(3) Remove screws securing lens retainer to base plate. Carefully remove lens retainer and lenses.
(4) Pull the flash tube assembly and wire out of the base plate. Disconnect wire at connector.
(5) Connect wire at connector, and route wire through the base plate. Insert light assembly into base plate.
(6) Put all lenses in position and secure using lens retainer and screws.
(7) Reconnect battery (refer to 24-30-00).

5. Anti-Collision Strobe Light Assembly Removal/Installation

WARNING: HIGH VOLTAGE! MAKE SURE THAT ELECTRICAL POWER TO STROBE LIGHT SYSTEM IS OFF.

NOTE: Removal and installation is analogous for the left wing anti-collision strobe light assembly and the right wing anti-collision strobe light assembly.

A. Remove Anti-Collision Strobe Light Assembly
   (1) Ensure electrical power to aircraft is OFF.
   (2) Disconnect battery (refer to 24-30-00).
   (3) Remove screws securing lens retainer to base plate. Carefully remove lens retainer and lenses.
   (4) Pull the flash tube assembly and wire out of the base plate. Disconnect wire at connector.
   (5) Remove screws securing base plate to wing tip fairing and remove base plate.
   (6) Disconnect wires from light at connector.

B. Install Anti-Collision Strobe Light Assembly
   (1) Reconnect wires to light at connector.
   (2) Position base plate on wing tip fairing and secure with screws.
   (3) Reconnect wire to flash light assembly at connector, and route wire through the base plate. Insert light assembly into the base plate.
   (4) Put all lenses in position and secure using lens retainer and screws.
   (5) Reconnect battery (refer to 24-30-00).
   (6) Perform anti-collision light functional test (refer to "Inspection/Check" below).

C. Anti-Collision Strobe Light Inspection/Check
   (1) Turn BAT switch ON.
   (2) Turn ACL light switch ON.
   (3) Verify that anti-collision strobe light works properly.
   (4) Turn OFF all switches.

6. Strobe Light Module Removal/Installation

WARNING: HIGH VOLTAGE! MAKE SURE THAT ELECTRICAL POWER TO STROBE LIGHT SYSTEM IS OFF.

A. Remove Strobe Light Module
   (1) Ensure electrical power to aircraft is OFF.
   (2) Disconnect battery (refer to 24-30-00).
   (3) Remove baggage compartment floorboard / 211 JB (refer to 25-21-00).
   (4) Disconnect module connectors.
   (5) Remove bolts securing module to fuselage structure and remove module from aircraft.

B. Install Strobe Light Module
   (1) Position module on fuselage structure and secure using hardware.
   (2) Reconnect module connectors.
   (3) Reconnect battery (refer to 24-30-00).
   (4) Perform anti-collision light functional test (refer to "Inspection/Check" below).

C. Anti-Collision Strobe Light Inspection/Check
   (1) Turn BAT switch ON.
   (2) Turn ACL light switch ON.
   (3) Verify that anti-collision strobe lights work properly.
   (4) Turn OFF all switches.

3. Navigation/Position/Anti-Collision Light Removal/Installation/Check

A. Remove Navigation/Position/Anti-Collision Light
(1) Ensure electrical power to aircraft is OFF.
(2) Remove screws securing base plate to wing tip fairing. Carefully remove light.
(3) Disconnect wires from light at connector.

B. Install Navigation/Position/Anti-Collision Light
(1) Reconnect wires to light at connector.
(2) Position gasket and base plate on wing tip fairing and secure with screws.
(3) Perform a navigation / position / anti-collision light functional test (refer to "Inspection/Check" below).

C. Navigation/Position/Anti-Collision Light Inspection/Check
(1) Turn BAT switch ON.
(2) Turn NAV light switch ON.
(3) Verify that the navigation / position light works properly.
(4) Turn ACL light switch ON.
(5) Verify that the anti-collision strobe light works properly.
(6) Turn OFF all switches.

# CHAPTER 34

# NAVIGATION

## TABLE OF CONTENTS


| Title | Chapter Section Subject | Page | Effectivity |
|---|---|---|---|
| NAVIGATION - GENERAL | 34-00-00 | 1 | |
| Introduction | 34-00-00 | 1 | |
| General Description | 34-00-00 | 1 | |
| PITOT/STATIC SYSTEM – DESCRIPTION | 34-11-00 | 1 | |
| Introduction | 34-11-00 | 1 | |
| Description and Operation | 34-11-00 | 1 | |
| PITOT/STATIC SYSTEM – MAINTENANCE | 34-11-00 | 201 | |
| General | 34-11-00 | 201 | |
| Tools, Equipment and Material | 34-11-00 | 201 | |
| Pitot-Static Tube Removal/Installation | 34-11-00 | 201 | |
| P/S Heat Control Box Removal/Installation (optional) | 34-11-00 | 202 | P/S Heat |
| Instruments Removal/Installation | 34-11-00 | 202 | |
| Inspection/Check | 34-11-00 | 202 | |
| STALL WARNING SYSTEM – DESCRIPTION | 34-18-00 | 1 | |
| Introduction | 34-18-00 | 1 | |
| Description and Operation | 34-18-00 | 1 | |
| STALL WARNING SYSTEM – MAINTENANCE | 34-18-00 | 201 | |
| General | 34-18-00 | 201 | |
| Transmitter Removal/Installation | 34-18-00 | 201 | |
| Warning Buzzer Removal/Installation | 34-18-00 | 201 | |
| Adjustment | 34-18-00 | 201 | |
| ATTITUDE AND DIRECTION – MAINTENANCE | 34-20-00 | 201 | |
| General | 34-20-00 | 201 | |
| Magnetic Compass Removal/Installation | 34-20-00 | 201 | |
| Turn Coordinator Removal/Installation | 34-20-00 | 201 | |
| Attitude Indicator Removal/Installation | 34-20-00 | 202 | |
| Directional Gyro Removal/Installation | 34-20-00 | 202 | |
| Adjustment/Test | 34-20-00 | 202 | |
| INTEGRATED FLIGHT SYSTEM – MAINTENANCE | 34-25-00 | 201 | Aspen EFD 1000 |
| General | 34-25-00 | 201 | Aspen EFD 1000 |
| EFD Removal/Installation | 34-25-00 | 201 | Aspen EFD 1000 |
| EFD Battery Replacement | 34-25-00 | 202 | Aspen EFD 1000 |
| Remote Sensor Module (RSM) Removal/Installation | 34-25-00 | 202 | Aspen EFD 1000 |
| Configuration Module (CM) Removal/Installation | 34-25-00 | 203 | Aspen EFD 1000 |
| Inspection/Check | 34-25-00 | 204 | Aspen EFD 1000 |

TABLE OF CONTENTS (Cont.)


| Title | Chapter Section Subject | Page | Effectivity |
|---|---|---|---|
| INTEGRATED FLIGHT SYSTEM – MAINTENANCE | 34-25-00 | 201 | Garmin G500 |
| General | 34-25-00 | 201 | Garmin G500 |
| Garmin G500 Removal/Installation | 34-25-00 | 201 | Garmin G500 |
| Inspection/Check | 34-25-00 | 204 | Garmin G500 |
| INDEPENDENT POSITION DETERMINING - MAINTENANCE | 34-40-00 | 201 | Garmin 430/530/650 |
| General | 34-40-00 | 201 | Garmin 430/530/650 |
| GPS Antenna Removal/Installation | 34-40-00 | 201 | Garmin 430/530/650 |
| INDEPENDENT POSITION DETERMINING - MAINTENANCE | 34-40-00 | 201 | Bendix/King KMD 150 |
| General | 34-40-00 | 201 | Bendix/King KMD 150 |
| KMD 150 Unit Removal/Installation | 34-40-00 | 201 | Bendix/King KMD 150 |
| GPS Antenna Removal/Installation | 34-40-00 | 202 | Bendix/King KMD 150 |
| Memory Battery | 34-40-00 | 202 | Bendix/King KMD 150 |
| Adjustment/Test | 34-40-00 | 202 | Bendix/King KMD 150 |
| INDEPENDENT POSITION DETERMINING - MAINTENANCE | 34-40-00 | 201 | FlymapL |
| General | 34-40-00 | 201 | FlymapL |
| FlymapL Unit Removal/Installation | 34-40-00 | 201 | FlymapL |
| GPS Antenna Removal/Installation | 34-40-00 | 203 | FlymapL |
| AHRS Sensor Removal/Installation | 34-40-00 | 203 | FlymapL |
| Inspection/Check | 34-40-00 | 205 | FlymapL |
| COLLISION WARNING SYSTEM - MAINTENANCE | 34-45-00 | 201 | FLARM |
| General | 34-45-00 | 201 | FLARM |
| FLARM Unit Removal/Installation | 34-45-00 | 201 | FLARM |
| GPS Antenna Removal/Installation | 34-45-00 | 203 | FLARM |
| Radio Antenna Removal/Installation | 34-45-00 | 203 | FLARM. |
| Display Unit Removal/Installation | 34-45-00 | 204 | FLARM |
| DEPENDENT POSITIONING DETERMINING - MAINTENANCE | 34-50-00 | 201 | Bendix/King |
| General | 34-50-00 | 201 | Bendix/King |
| Bendix/King KT 76A/C Transponder Removal/Installation | 34-50-00 | 201 | Bendix/King |
| Transponder Antenna Removal/Installation | 34-50-00 | 202 | Bendix/King |

**TABLE OF CONTENTS (Cont.)**


| Title | Chapter Section Subject | Page | Effectivity |
|---|---|---|---|
| DEPENDENT POSITIONING DETERMINING - MAINTENANCE | 34-50-00 | 201 | Garmin Avionics |
| General | 34-50-00 | 201 | Garmin Avionics |
| GTX 327 / 328 / 330 Transponder Removal/Installation | 34-50-00 | 202 | Garmin Avionics |
| Transponder Antenna Removal/Installation | 34-50-00 | 203 | Garmin Avionics |

# NAVIGATION - GENERAL

1. Introduction

   A. This chapter describes units and components that provide aircraft navigational information.

2. General Description

   A. Different instruments and devices offer a means of determining flight conditions, aircraft attitude and position of the aircraft over the ground.
   The following groups can be separated according to way data is sourced:

   (1) Devices which use magnetic, gyroscopic and inertia forces to supply data to determine aircraft attitude and heading, including:
   (a) Attitude indicator
   (b) Directional gyro
   (c) Turn coordinator
   (d) Magnetic compass

   (2) Devices which sense environmental conditions and use the data to influence navigation, including:
   (a) Airspeed indicator
   (b) Altimeter
   (c) Vertical speed indicator
   (d) Stall warning system

   (3) Devices which provide information to determine position and are mainly independent of ground installations, including:
   (a) GPS receiver

   (4) Devices which provide information to determine position and are mainly dependent on ground installations. That includes:
   (a) VOR/LOC receiver
   (b) Transponder

# PITOT/STATIC SYSTEM - DESCRIPTION

1. Introduction

   A. The static and pitot pressure system supplies static and pitot pressure for the airspeed indicator, altimeter and vertical speed indicator as well as for the air data computer and the airspeed sensor of the KAPI logger (both are optional).

2. Description and Operation

   A. Pitot-Static Tube and Lines
   Pitot and static pressures are picked up by the pitot-static tube installed on the underside of the left wing, and carried through lines inside the wing and fuselage to the gauges on the instrument panel. The pitot and static pressure lines have filter elements to prevent foreign material such as dust or water entering the flight instruments. These filter elements are located in the lines and may be easiliy replaced.

   B. Pitot Heating
   Optional the aircraft is equipped with a heated pitot tube to prevent icing. It consists of a heating coil and a temperature sensor inside the pitot tube and a control box installed on the bottom of the instrument panel (left-hand side). Both are connected by electrical wires. Additionally there is a warning light in the instrument panel that indicates if the pitot heat is switched off or if the heating is not working even though it is switched on and the temperature in the pitot tube is below approx. 50°C (122°F).

   C. Figure 1 shows the pitot/static system schematically.

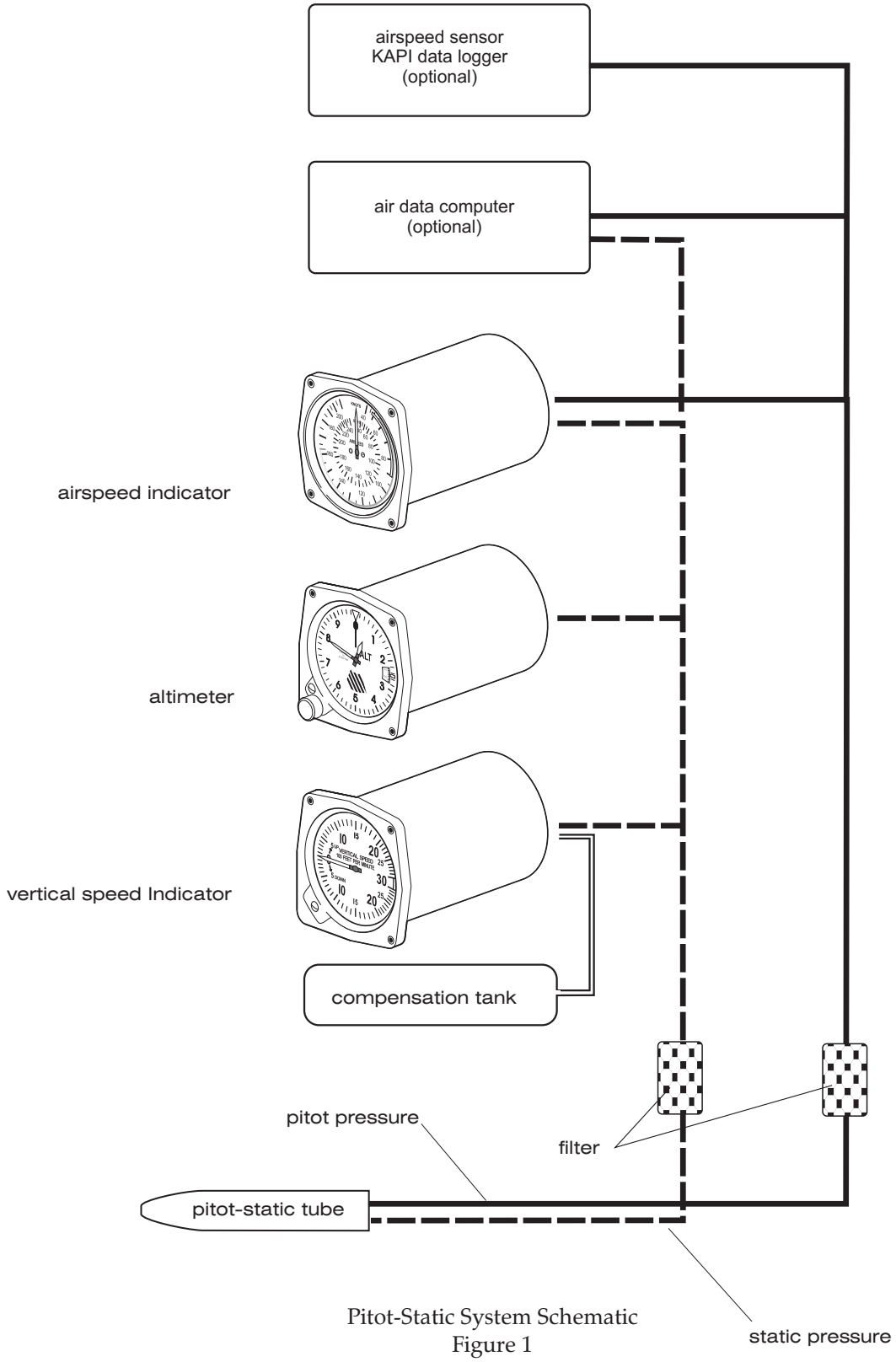


Pitot-Static System Schematic
Figure 1

## PITOT/STATIC SYSTEM - MAINTENANCE

1. General

CAUTION: NEVER BLOW COMPRESSED AIR THROUGH PITOT OR STATIC LINES TOWARD INSTRUMENTS AS THIS CAN CAUSE DAMAGE TO INSTRUMENTS.

A. Proper maintenance of the pitot/static system is essential for proper altimeter, airspeed and vertical speed indications. Moisture, obstructions and leaks in the system will result in erroneous, erratic or zero readings on the associated instruments.
Filters should be regularly inspected and replaced as required.

B. A cover should be placed over the pitot-static tube when the aircraft is parked, to prevent insects and water from entering the pitot orifice.

2. Tools, Equipment and Material

| | Quantity | Equipment | Parts No. | Manufacturer |
|---|---|---|---|---|
| 6.B./6.C. | 1 | Sphygmo-manometer pressure bulb with check valve | - | commercially available |
| 6.B. | 1 | Surgical hose | | commercially available |

3. Pitot-Static Tube Removal/Installation

CAUTION: ENSURE THE PITOT HEAT (OPTIONAL) IS SWITCHED OFF AND THE TUBE HAS COOLED DOWN BEFORE TOUCHING THE TUBE. A HEATED PITOT TUBE CAN GET EXTREMELY HOT DURING OPERATION.

A. Remove Pitot-Static Tube
(1) Ensure electrical power to aircraft is OFF.
(2) Remove screws securing pitot-static tube to wing skin.
(3) Identify and disconnect pitot / static lines and electrical connector (optional) at pitot tube.
(4) Remove pitot-static tube from aircraft.

B. Install Pitot-Static Tube
(1) Connect pitot / static lines and electrical connector (optional) at pitot-static tube
(2) Put pitot-static tube in position on the wing and secure using screws.
(3) Perform a pitot-static system functional test (refer to “Inspection/Check” below).

4. P/S Heat Control Box Removal/Installation (optional)

CAUTION: NEVER OPERATE PITOT HEATING WITHOUT THE CONTROL BOX AS THIS CAN DESTROY THE PITOT TUBE.

A. Remove the Control Box
   (1) Ensure electrical power to aircraft is OFF.
   (2) Disconnect battery (refer to 24-30-00).
   (3) Remove glare shield (refer to 31-10-00).
   (4) Disconnect electrical connector from control box.
   (5) Remove cable ties securing control box to instrument panel.
   (6) Remove control box from aircraft.

B. Install the Control Box
   (1) Put control box in position in instrument panel and secure using cable ties.
   (2) Reconnect electrical connector to control box.
   (3) Install glare shield (refer to 31-10-00).
   (4) Reconnect battery (refer to 24-30-00).
   (5) Carry out a functional test of the P/S heating.

5. Instruments Removal/Installation

A. Remove an Instrument

CAUTION: PLUG OR CAP INSTRUMENT PORTS IMMEDIATELY AFTER DISCONNECTING PITOT OR STATIC LINES TO PREVENT DIRT OR FOREIGN MATERIAL FROM ENTERING.

   (1) Gain access to the back of instrument and disconnect static/pitot hose from instrument.
   (2) While supporting the instrument, remove screws securing instrument to instrument panel.
   (3) Remove instrument.

B. Install an Instrument
   (1) Place instrument to instrument panel and secure with screws.
   (2) Reconnect static/pitot hose to instrument.
   (3) Perform a pitot-static system functional test (refer to “Inspection/Check” below).

6. Inspection/Check

A. After any component replacement or repair, the system should be checked for proper function and a leakage test should be performed.

B. Pitot System Leak Test
   (1) Fasten surgical hose and sphygmomanometer bulb over pitot head.
   (2) Pump bulb until airspeed indicator registers 150 KIAS.
   (3) Close check valve.
   (4) Wait 15 seconds for airspeed indicator to stabilize.

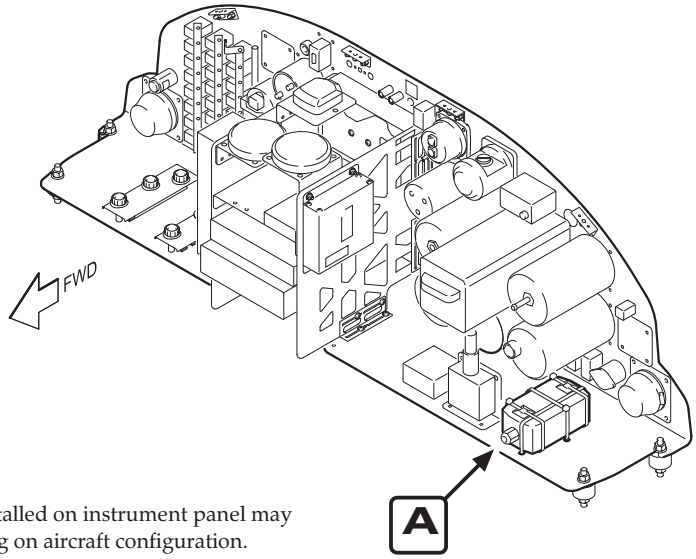


NOTE: Example View!
Equipment installed on instrument panel may vary depending on aircraft configuration.

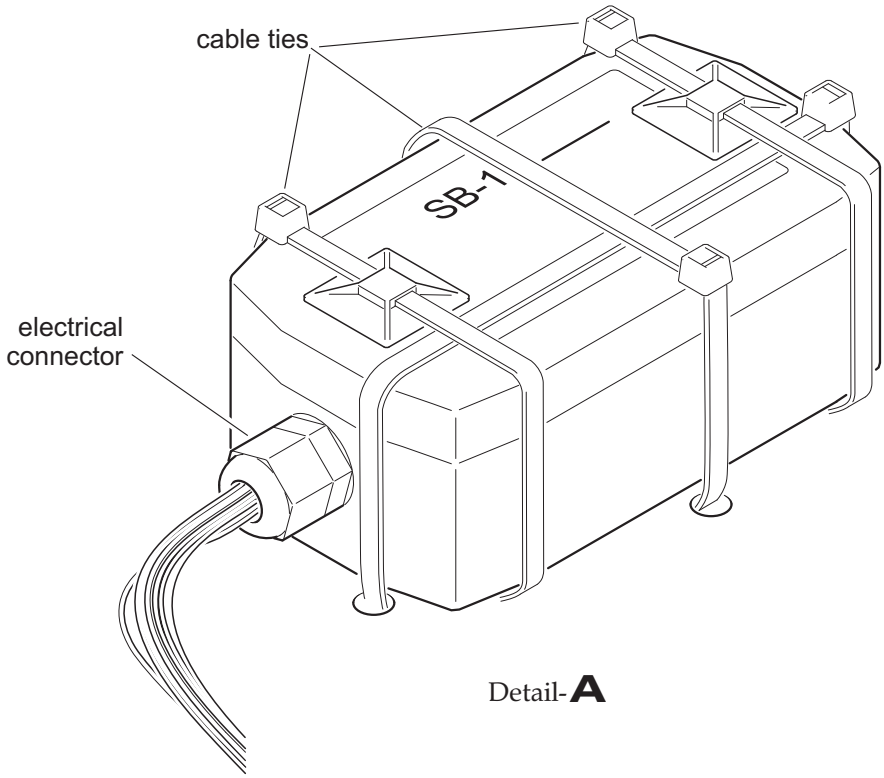


P/S Heat Control Box
Figure 202

(5) Observe airspeed indicator for one minute.
(6) The airspeed should drop no more than 10 KIAS.
(7) Slowly release check valve so pressure is reduced gradually to prevent instrument damage.
(8) If test reveals a leak in system, check all connections for tightness and repair faulty components.

C. Static System Leak Test
(1) Tape over static ports at pitot-static tube.
(2) Insert a "T" in a static pressure line.
(3) Squeeze sphygmomanometer bulb and close check valve to establish a vacuum inside bulb.
(4) Connect sphygmomanometer to the static pressure line.
(5) Slowly open air bulb check valve until altimeter indicates a 1000 ft increase in altitude then close check valve to trap suction in system.
(6) While increasing suction and altimeter indicating 1000 ft, ensure that the airspeed indicator shows an increase and the vertical speed indicator shows a climb indication.
(7) Leakage must not exceed 100 ft/min of altitude loss as indicated on the altimeter.
(8) If leakage rate exceeds the maximum allowable, check all fittings and hoses for condition and tightness and repeat leak test.
(9) If leakage rate still exceeds the maximum allowable, undertake the following:
(10) Disconnect static pressure lines from airspeed indicator, vertical speed indicator and altitude encoder.
(11) Connect lines together using suitable fittings so altimeter is the only instrument still connected to static pressure system.
(12) Repeat leak test to ascertain whether the static pressure system or the bypassed instruments are causing the leakage. If instruments are at fault, they must be repaired by an approved repair station or replaced. If static pressure system is faulty, proceed as follows:

CAUTION: DO NOT APPLY POSITIVE PRESSURE WITH AIRSPEED INDICATOR OR VERTICAL SPEED INDICATOR CONNECTED TO STATIC PRESSURE SYSTEM.

(13) Remove sphygmomanometer assembly.
(14) Insert a "T" in a static pressure line.
(15) Attach hose to "T" and slowly apply positive pressure until altimeter indicates a 500 ft decrease in altitude. Maintain this altimeter indication while checking for leaks.
(16) Coat line with a solution of mild soap and water, watching for bubbles to locate leaks.
(17) Tighten leaking connections. Repair or replace defective components.
(18) Reconnect airspeed, vertical speed indicator and altitude encoder. Repeat static system leak test.

## STALL WARNING SYSTEM - DESCRIPTION

1. Introduction

   A. The aircraft is equipped in with a stall warning system. It signals an approaching stall to the pilot by an audible alarm in the cockpit.

2. Description and Operation

   A. The stall warning system consists of a mechanical transmitter, located in the leading edge of the left wing and a warning buzzer behind the instrument panel. Both are connected by electrical wires.

   B. As the aircraft approaches a stall, the low pressure on the upper surface of the wings moves forward around the leading edge of the wings. As a result, a microplate at the transmitter is deflected upwards. A mechanical contact is made which sends an electrical signal to the warning buzzer in the cockpit. The warning buzzer gives off a 2 kHz alerting tone.

## STALL WARNING SYSTEM - MAINTENANCE

1. General

A. Maintenance is limited to the removal/installation of system components. In wintry conditions, make sure that the system transmitter microplate is always clear of ice and snow.

2. Transmitter Removal/Installation

A. Remove Transmitter
(1) Ensure electrical power to aircraft is OFF.
(2) Remove 3 screws securing transmitter covering to wing structure. Carefully pull transmitter with covering out of wing.
(3) Disconnect electrical connector.
(4) Remove 2 screws securing covering to transmitter and remove covering.

B. Install Transmitter
(1) Install transmitter covering on transmitter.
(2) Connect electrical connector.
(3) Put transmitter with covering in position and secure to wing structure.
(4) Perform a flight test to check the stall warning system (refer to "Adjustment" below).

3. Warning Buzzer Removal/Installation

A. Remove Warning Buzzer
(1) Ensure electrical power to aircraft is OFF.
(2) Disconnect battery (refer to 24-30-00).
(3) Remove glare shield (refer to 31-10-00).
(4) Disconnect electrical connector.
(5) Remove nuts securing buzzer to instrument panel and remove buzzer.

B. Install Warning Buzzer
(1) Put buzzer in position at back of instrument panel and secure using two nuts.
(2) Connect electrical connector.
(3) Install glare shield (refer to 31-10-00).
(4) Reconnect battery (refer to 24-30-00).
(5) Perform a functional check of the stall warning system.

4. Adjustment

A. The stall warning system is so adjusted that the system will come into action approx. 10 – 15 km/h (6 - 8kts) before the aircraft stalls. If these values are not achieved, it is possible to modify the system behavior by shortening the microplate by a few millimeters. This will lower the speed the system is activated. A test for proper system operation is only possible in flight. Repeat the procedure until the microplate has the correct length.

## ATTITUDE AND DIRECTION - MAINTENANCE

1. General

CAUTION: GYROS ARE DELICATE AND CAN NOT WITHSTAND THE SHOCK OF BEING DROPPED, JARRED OR STRUCK BY PIECES OF EQUIPMENT. DO NOT PLACE GYROS ON ANY HARD SURFACE. PAD WITH GENEROUS FOAM.

A. The construction and function of the magnetic compass, turn coordinator, attitude indicator and directional gyro is conventional, with no special features.

B. Maintenance is limited to component removal and re-installation.

2. Magnetic Compass Removal/Installation

A. Remove Magnetic Compass
(1) Ensure electrical power to aircraft is OFF.
(2) Disconnect battery (refer to 24-30-00).
(3) Remove glare shield (refer to 31-10-00).
(4) Disconnect electrical wires from compass.
(5) Remove screws securing compass and remove compass from aircraft.

B. Install Magnetic Compass
(1) Put compass in position and secure using screws.
(2) Connect electrical wires to magnetic compass.
(3) Install glare shield (refer to 31-10-00).
(4) Reconnect battery (refer to 24-30-00).
(5) Do a compass swing (refer to “Adjustment/Test” below).

3. Turn Coordinator Removal/Installation

A. Remove Turn Coordinator
(1) Ensure electrical power to aircraft is OFF.
(2) Disconnect battery (refer to 24-30-00).
(3) Remove glare shield (refer to 31-10-00).
(4) Disconnect electrical connector from turn coordinator.
(5) While supporting the turn coordinator, remove screws securing turn coordinator to instrument panel.
(6) Remove turn coordinator from aircraft.

B. Install Turn Coordinator
(1) Put turn coordinator in position in instrument panel and secure using screws.
(2) Reconnect electrical connector to turn coordinator.
(3) Install glare shield (refer to 31-10-00).
(4) Reconnect battery (refer to 24-30-00).
(5) Conduct a functional test of the unit.

4. Attitude Indicator Removal/Installation

A. Remove Attitude Indicator
(1) Ensure electrical power to aircraft is OFF.
(2) Disconnect battery (refer to 24-30-00).
(3) Remove glare shield (refer to 31-10-00).
(4) Disconnect electrical connector from attitude indicator.
(5) While supporting the indicator, remove screws securing indicator to instrument panel.
(6) Remove attitude indicator from aircraft.

B. Install Attitude Indicator
(1) Put attitude indicator in position in instrument panel and secure with screws.
(2) Connect electrical connector to the instrument.
(3) Install glare shield (refer to 31-10-00).
(4) Reconnect battery (refer to 24-30-00).
(5) Conduct a functional test of the unit.

5. Directional Gyro Removal/Installation

A. Remove Directional Gyro
(1) Ensure electrical power to aircraft is OFF.
(2) Disconnect battery (refer to 24-30-00).
(3) Remove glare shield (refer to 31-10-00).
(4) Disconnect electrical connector from back of the instrument.
(5) While supporting the gyro, remove screws securing directional gyro to instrument panel.
(6) Remove directional gyro from aircraft.

B. Install Directional Gyro
(1) Put directional gyro in position in instrument panel and secure with screws.
(2) Connect electrical connector to the instrument.
(3) Install glare shield (refer to 31-10-00).
(4) Reconnect battery (refer to 24-30-00).
(5) Conduct a functional test of the unit.

6. Adjustment/Test

A. Magnetic Compass Calibration
(1) Prior to calibrating the compass, the aircraft should be in a flight environment which is as realistic as possible.
(a) Place aircraft in level flight attitude
(b) Check the canopy is closed.
(c) Check flaps are retracted.
(d) Start engine and turn ON all electrical equipment that is usually used at cruise (refer to AQUILA AT01 Airplane Flight Manual).

CAUTION: DUE TO INSUFFICIENT ENGINE COOLING ON THE GROUND, DO NOT CONTINUOUSLY OPERATE THE ENGINE AT CRUISE RPM FOR MORE THAN 3 MIN.

(e) Run engine and set throttle at cruise position.

NOTE: When performing maintenance on the magnetic compass, use a non-magnetic or plastic screwdriver.

(2) Remove screws securing access plate to compass casing to reveal adjustment screws.
(3) Set adjustment screws of compensator to zero. Zero position is indicated when dot of screw is aligned with dot on compass frame.
(4) Taxi airplane to compass rose.
(5) Align centerline of aircraft on magnetic North heading. Adjust N - S set screw until compass reads North.
(6) Align centerline of aircraft on magnetic East heading. Adjust E - W set screw until compass reads East.
(7) Align centerline of aircraft on magnetic South heading and note resulting South error.
(8) Adjust N - S set screw until half of error is removed.
(9) Align centerline of aircraft on magnetic West heading and note resulting West error.
(10) Adjust E - W set screw until half of error is removed.
(11) Align centerline of aircraft in successive magnetic 30-degree headings and record compass readings on appropriate compass correction (deviation) card. Deviations must not exceed 10 degrees on any heading.

## INTEGRATED FLIGHT SYSTEM - MAINTENANCE

1. General

A. This section provides instructions necessary for authorized personnel to inspect and maintain the EFD1000 system. Instructions for removal and replacement of LRUs that have been previously installed in the aircraft are included.

B. The Aspen EFD1000 PFD system is comprised of the primary flight display (PFD), remote sensor module (RSM) and configuration module (CM). The EFD1000 PFD system provides display of attitude, airspeed, altitude, direction of flight, vertical speed, turn rate and turn quality. The system may optionally provide display of navigation information through interfaces to GPS receivers and/or VHF navigation receivers.

C. The operation of the Aspen EFD 1000 PFD requires the following software version:

- for ASPEN EFD 1000 PFD: software version MAP 2.x or newer approved versions

Only install ETSO'd software versions (for airplanes registered in Europe or countries where the EASA-TC has been accepted) respectively FAA approved software versions (for airplanes registered in the USA or countries where the FAA-TC has been accepted).
Software-updates will be released via Service Information (SI) at www.aquila-aviation.de.
The actual software version is documented in the aircraft equipment list, located in chapter 6.5.1 of the AQUILA AT01 Airplane Flight Manual.

**All Service Information released from AQUILA and related to software versions have to be attached to this maintenance manual for continuing airworthiness!**

D. No special tools are required for the removal and replacement of any system LRUs. If a LRU is found to be defective it should be removed and returned to a properly rated facility for repair or replacement. If fasteners are deformed in any way, they must be replaced.

E. For bonding checks on the AQUILA AT01 no procedures or equipment are necessary other than that which are commonly expected for bonding measurements on small aircraft. Refer to AC 43.13-1B, chapter 11, section 15 "Grounding and Bonding" for further information on bonding check procedures and equipment.

F. Refer to the Aspen EFD1000 and EFD500 SW v2.x Installation Manual, P/N 900-00003-001, revision Z or later and the Aspen EFD1000 and EFD500 Instructions for Continued Airworthiness, P/N 900-00012-001, revision K or later for additional maintenance information on the EFD 1000 system and fastener identification and discard recommendations.

2. EFD Removal/Installation

A. Remove EFD
(1) Verify electrical power to aircraft is OFF.
(2) Disconnect battery (refer to 24-30-00).

(3) Carefully insert a flat blade screw driver into the locking mechanism on the top center of the EFD.
(4) While gently prying pull back the top of the EFD and extract from bracket.
(5) Remove nut securing braided ground strap to EFD.
(6) Remove pitot and static quick connectors (EFD1000 only) by pulling back outer spring loaded locking sleeve while unplugging connectors. To remove 44 pin D-sub connector unscrew both jackscrews fully and pull connector straight back.

B. Install EFD
(1) Verify electrical power to aircraft is OFF.
(2) Install 44 pin D-sub connector and tighten jacks crews until connector is fully seated.
(3) Install pitot and static lines (EFD1000 only) to back of EFD by firmly pressing the fitting until fully seated (pitot and static quick connectors are keyed and cannot be crossed).
(4) Gently pull on connector to ensure proper connection.
(5) Connect braided bonding strap to EFD with nut.
(6) Insert bottom of EFD into bracket and pivot top forward until it locks into place on bracket.
(7) Reconnect battery (refer to 24-30-00).
(8) Verify all system interfaces are functional (refer to section 10.6 of the Aspen EFD1000 and EFD500 SW v2.x Installation Manual, P/N 900-00003-001, revision Z or later) and the correct software version is installed.
(9) Verify proper bonding per section 10.1.2 of the Aspen EFD1000 and EFD500 SW v2.x Installation Manual, P/N 900-00003-001, revision Z or later.
(10) Perform a pitot/static system leak test (refer to 34-11-00).

3. EFD Battery Replacement

A. Replace EFD Battery

NOTE: EFD battery replacement must only be performed by a properly certified individual or facility.

(1) Remove EFD (refer to “EFD Removal/Installation” above).
(2) Remove two screws on each end of the oval-shaped cover plate on backside of the EFD.
(3) Unplug electrical connector and slide battery out of EFD.
(4) Install new battery into EFD, then connect battery plug.
(5) Position cover plate and tighten the cover screws. Tighten to 1,4 Nm (12 in.lbs).
(6) Re-install and test EFD (refer to “EFD Removal/Installation” above).

4. Remote Sensor Module (RSM) Removal/Installation

A. Remove RSM
(1) Verify electrical power to aircraft is OFF.
(2) Disconnect battery (refer to 24-30-00).
(3) Gain access to the underside of the RSM mounting location.
(4) Unplug the RSM connector. Unscrew RSM electrical connector from inside and undo shield ground wire from ground stud.
(5) Remove sealant from around base of RSM and on mounting screws.

(6) Remove four 8-32 non-ferrous mounting screws from RSM and remove RSM from aircraft taking care to guide 24 inch "pigtail" connector out through ½ inch hole in aircraft skin.

B. Install RSM
(1) Verify electrical power to aircraft is OFF.
(2) Replace the O-ring on the RSM. Contact Aspen Avionics for O-ring replacement (256-00001-001).
(3) Verify RSM shim is installed between aircraft skin and RSM if required.
(4) Feed circular connector down through ½ inch hole in aircraft skin and mount RSM (vent hole faces aft) with four 8-32 non-ferrous screws. Tighten to 1,4-1,7 Nm (12-15 in.lbs).

NOTE: It is critical that the screws are non-ferrous to avoid compass errors.

(5) Connect the circular electrical connector and cable tie harness to prevent chafing and interference.
(6) Connect shield ground wire to ground stud.
(7) Seal around base and on top of four mounting screws of the RSM using a good quality electrical sealant (Sikaflex-221 or equivalent, silicone-free).
(8) Reconnect battery (refer to 24-30-00).
(9) Verify proper bonding per section 10.1.2 and perform RSM calibration per section 10.5 of the Aspen EFD1000 and EFD500 SW v2.x Installation Manual, P/N 900-00003-001, revision Z or later.
(10) Check OAT operation per section 10.6.4 and check RSM GPS operation per section 10.6.6 of the Aspen EFD1000 and EFD500 SW v2.x Installation Manual, P/N 900-00003-001, revision Z or later.

5. Configuration Module (CM) Removal/Installation

A. Remove CM
(1) Verify electrical power to aircraft is OFF.
(2) Disconnect battery (refer to 24-30-00).
(3) Cut the two cable ties affixing the CM to the PFD wiring harness.
(4) Unplug the Molex connector by pressing down on the locking tab and gently pulling the connector from the module.

B. Install CM
(1) Verify electrical power to aircraft is OFF.
(2) Plug the Molex connector into the module until it clicks.
(3) Cable tie the module to the PFD wiring harness..
(4) Reconnect battery (refer to 24-30-00).
(5) Perform the installation menu unit configuration per section 10.4.5 of the Aspen EFD1000 and EFD500 SW v2.x Installation Manual, P/N 900-00003-001, revision Z or later.
(6) Perform RSM calibration per section 10.5 of the Aspen EFD1000 and EFD500 SW v2.x Installation Manual, P/N 900-00003-001, revision Z or later.

6. Inspection/Check

A. All units, brackets, installation hardware and wiring of the EFD1000 system should be checked as defined below during annual inspection. Items found to be defective should be repaired or replaced prior to returning the aircraft to service. The performance of this inspection should not create the need for additional protective treatment (Alodine, paint, etc) of surfaces within the aircraft.

B. EFD Inspection
(1) Inspect the EFD(s) for damage and verify proper operation using the documents identified in section 1 of the Aspen EFD1000 and EFD500 Instructions for Continued Airworthiness, P/N 900-00012-001, revision K or later.
(2) Check the EFD wiring, pneumatic tubing and quick disconnects for integrity, damage, chafing or excessive wear.
(3) Check EFD braided bonding strap for proper termination at the EFD and aircraft grounding point to maintain HIRF and lightning compliance.
(4) Verify the resistance is $\leqslant$ 3 mΩ from EFD ground stud to airframe ground.
(5) Inspect the installation of the EFD for corrosion on the EFD and the mounting structure.
(6) Inspect the fasteners for tightness and general condition.

C. RSM Inspection
(1) Inspect the RSM(s) visually for damage and wear on the lightning strip.
(2) Check RSM wiring for damage, chafing or excessive wear.
(3) Verify the RSM doubler plate bonding resistance from the ground stud to airframe ground is $\leqslant$ 3 mΩ to maintain HIRF and lightning compliance.
(4) Inspect the RSM installation incl. doubler for corrosion on the RSM, the RSM shim (optional), the fuselage skin and the doubler.
(5) Inspect the installation for cracks in the fuselage and loose or damaged fasteners.

D. Configuration Module
(1) Check the configuration module(s) for damage.
(2) Check the configuration module wiring for damage, chafing or excessive wear.

## INTEGRATED FLIGHT SYSTEM - MAINTENANCE

1. General

A. This section provides instructions necessary for authorized personnel to inspect and maintain the G500 system.

B. The Garmin G500 PFD/MFD system is a combination of Garmin LRUs designed to provide both a PFD and MFD in the primary field of view. The system consists of a GDU 620 display, GRS 77 AHRS, GDC 74( ) ADC, GMU 44 magnetometer and GTP 59 outside air temperature probe.

C. The operation of the Garmin G500 requires the following software versions:

- for GDU 620: software version v3.01 or newer approved versions
- for GRS 77: software version v2.12 or newer approved versions
- for GDC 74A: software version v3.02 or newer approved versions

Only install ETSO'd software versions (for airplanes registered in Europe or countries where the EASA-TC has been accepted) respectively FAA approved software versions (for airplanes registered in the USA or countries where the FAA-TC has been accepted).
Software updates will be released via Service Information (SI) at www.aquila-aviation.de.
The actual software version is documented in the aircraft equipment list, located in chapter 6.5.1 of the AQUILA AT01 Airplane Flight Manual.

**All service information released from AQUILA and related to software versions have to be attached to this maintenance manual for continuing airworthiness!**

D. For bonding checks on the AQUILA AT01 no procedures or equipment are necessary other than that which are commonly expected for bonding measurements on small aircraft. Refer to AC 43.13-1B, chapter 11, section 15 "Grounding and Bonding" for further information on bonding check procedures and equipment.

E. Refer to the Garmin G500 AML STC Installation Manual, P/N 190-01102-06, revision 8 or later and the G500 PFD/MFD System Instructions for Continued Airworthiness, P/N 190-01102-00, revision 4 or later for additional maintenance information on the G500 system.

2. G500 Removal/Installation (Ref. Fig. 201)

A. If any G500 LRUs are removed and reinstalled, verify that the LRU unit power-up self-test sequence is successfully completed and no failure messages are annunciated on the GDU 620 display. See the unit replacement procedure in section 3 of the G500 AML STC Installation Manual.

If any work has been done on the aircraft that could affect the system wiring, antenna cable, or any interconnected equipment, verify the G500 system unit power-up self-test sequence is successfully completed and no failure messages are annunciated on the GDU 620 display. Refer to the G500 AML STC Installation Manual for particular LRU removal/installation procedures and special handling precautions.

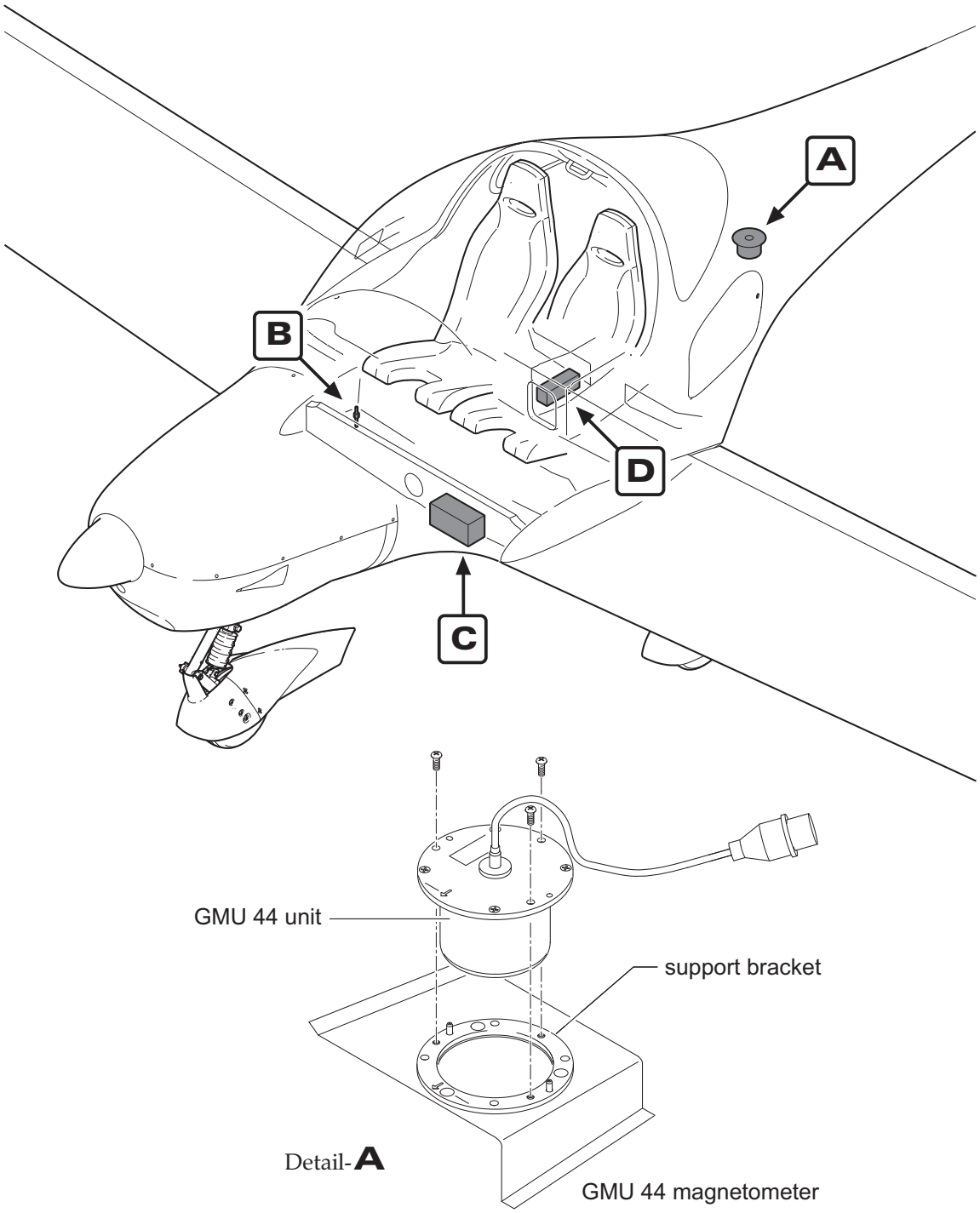


G500 System Components
Figure 201 (1)

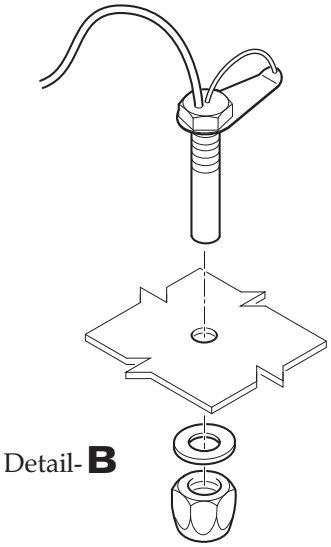


GTP 59 (OAT sensor)

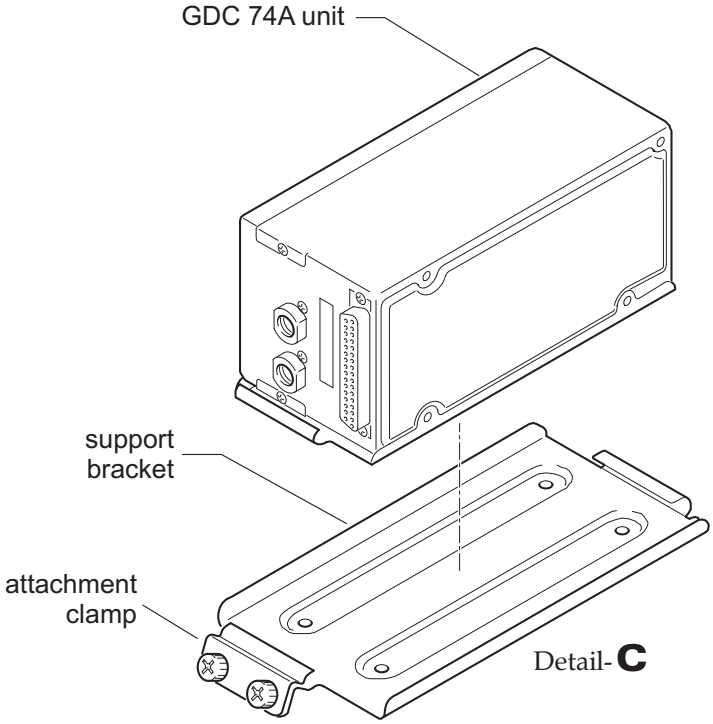


GDC 74A (air data computer)

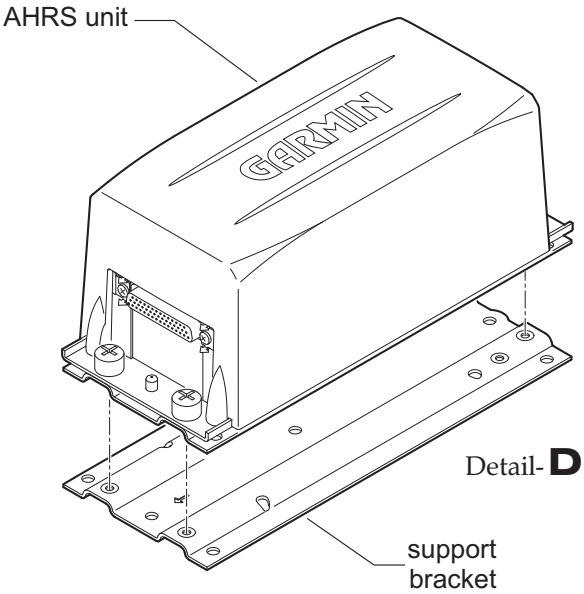


GRS 77 (AHRS sensor)

G500 System Components
Figure 201 (2)

3. Inspection/Check

A. All G500 system LRUs are designed to detect internal failures. A thorough self-test is executed automatically upon application of power to the units, and built-in tests are continuously executed. Detected errors are indicated on the GDU 620 display via failure annunciations.

Operation of the G500 system is not permitted unless an inspection as described in this section has been completed within the preceding 12 calendar months. Conduct a visual inspection (look for signs of wear, deterioration, or damage to wires, backshells, connectors, overbraid, bonding straps or foil) of the G500 system LRUs and wiring harnesses to ensure installation integrity:

(1) Inspect all units for security of attachment, including visual inspection of brackets and other supporting structure attaching all units to the airframe.
(2) Inspect all knobs and buttons for legibility.
(3) Visually inspect each unit's wiring for chafing or wear at each termination.
(4) Visually check for any signs of corrosion.

B. GDU 620 - Display Unit
(1) Maintenance of the GDU 620 is “on condition” only.

C. GRS 77 - Attitude, Heading Reference System (AHRS)
(1) The GRS 77 utilizes an earth magnetic field model which is updated once every five years as part of the aviation database maintained by the owner/operator. If the magnetic model is not up to date, the unit will issue an alert upon startup indicating the model has expired. The model can be updated in accordance with the database update section of the G500 AML STC Installation Manual. Otherwise maintenance of the GRS 77 is “on condition” only.

D. GMU 44 – Magnetometer
(1) Maintenance of the GMU 44 is “on condition” only.

E. GDC 74( ) - Air Data Computer
(1) Test according to title 14 CFR §§ 91.411 and 91.413 as well as 14 CFR §§ 43 Appendix E. See the pitot-static checkout procedure in section 5.8 of the G500 AML STC Installation Manual for the test procedure.

F. GTP 59 - OAT Probe
(1) Maintenance of the OAT Probe is “on condition” only.

G. Electrical Bonding Test
(1) G500 LRU electrical bonding must be tested every 2000 flight hours or ten (10) years, whichever is first. During the test, any cables normally attached to the LRU must be disconnected from the LRU. If measured resistance is greater than applicable values in the following table, bonding must be improved to meet applicable requirements for a new installation in accordance with section 3.8 of the G500 AML STC Installation Manual.

| LRU | Requirement |
|---|---|
| GDU 620 — Display Unit | 40 mOhm (to instrument panel) |
| GRS 77 — Attitude, Heading Reference System (AHRS) | 20 mOhm (to instrument panel) |
| GMU 44 — Magnetometer | No bond check required since the GMU is required to be isolated from it's mounting location. Verify that there is a sufficient clearance around the installation per section 2.5.11.5.3 of the G500 AML STC Installation Manual. |
| GDC 74( ) — Air Data Computer | 20 mOhm (to instrument panel) |
| GTP 59 — OAT Probe | No bond check required since the GTP is required to be isolated from it's mounting location. Verify that there is a sufficient clearance around the installation per section 2.5.11.7.2 of the G500 AML STC Installation Manual. |

## INDEPENDENT POSITION DETERMINING – MAINTENANCE

1. General

A. This section covers that portion of the system which provides information to determine position and is mainly independent of ground installations. This includes the GPS portion of the GNS 430(W), GNS 530(W) or GTN 650 navigation management system (NMS). The scope of maintenance is limited to the removal and installation of the GPS antenna. For removal and installation procedures for the GNS 430(W) / GNS 530(W) / GTN 650, refer to 23-10-00.

B. The GNS 430(W) / GNS 530(W) / GTN 650 system is a fully integrated, panel-mounted instrument which contains a VHF communications transceiver, a VOR/ILS/GS receiver and GPS navigation computer. The primary function of the GPS portion of the system is to acquire signals from the GPS system satellites, recover orbital data, make range and Doppler measurements and process this information in real-time to obtain the user's position, velocity and time. GPS signals are received by an antenna mounted on top of fuselage behind the cabin.

2. GPS Antenna Removal/Installation

A. Remove GPS Antenna
(1) Open baggage compartment door and remove access / inspection plate 211 KC (refer to 25-12-00).
(2) Disconnect antenna cable from antenna.
(3) Remove nuts and washers securing antenna to fuselage.
(4) Remove antenna from aircraft.

B. Install GPS Antenna
(1) Put gasket and antenna from outside, and backing plate from inside in position in fuselage.
(2) Install washers and nuts securing antenna to fuselage. Simultaneously connect ground cable to backing plate.
(3) Seal the antenna and gasket to fuselage using a good quality electrical sealant (Sikaflex-221 or equivalent, silicone-free).
(4) Connect antenna cable.
(5) Close baggage compartment door and install access / inspection plate 211 KC (refer to 25-12-00).

## INDEPENDENT POSITION DETERMINING - MAINTENANCE

1. General

A. This section covers that portion of the system which provides information to determine position and is mainly independent of ground installations. This includes the KMD 150 multifunctional display / GPS.

B. The KMD 150 is a panel mounted long range GPS based navigation system featuring a high resolution color TFT map display and world-wide database coverage contained in a series of three PCMCIA cards. The primary purpose of the equipment is to provide the pilot with a clear graphical display of present position relative to coastlines, controlled airspace, airways, airports and aeronautical beacons. The equipment also provides facilities for flight planning and the display of route information.

The unit with an internal GPS receiver is installed in a rack in the instrument panel. GPS signals are received by an antenna mounted on top of the fuselage behind the cabin.

C. This section covers installation/removal procedures of equipment and functional tests. Refer to Honeywell Installation Manual, Bendix/King KMD 150 Multifunction Display / GPS, P/N 006-10607-0000, latest revision, for additional maintenance information on the system. Refer to KMD 150 Pilot's Guide and Reference, P/N 006-18220-0000, latest revision, for a detailed description and operation information.

2. KMD 150 Unit Removal/Installation

A. Remove KMD 150 Unit
(1) Ensure electrical power to aircraft is OFF.
(2) Insert a 3/32" hex wrench into the jackscrew access hole on the lower right-hand side of the unit face and turn counterclockwise until locking paw releases unit from rack.
(3) Carefully pull unit out of the mounting tray.

B. Install KMD 150 Unit
(1) Ensure all required plugs and cables at back of the mounting tray are properly connected.
(2) Carefully slide unit forward into the mounting tray until contact is made by the pins and then push the unit firmly into the mounting tray until fully engaged.

CAUTION: WHEN MOUNTING THE UNIT, DO NOT PRESS ON DISPLAY WINDOW AS DAMAGE MAY RESULT.

WHILE SLIDING IN THE UNIT, ENSURE THAT THE FLOATING BNC CONNECTOR IS POINTING STRAIGHT OUT OF THE BACK OF THE RACK. TWISTING THE BNC CABLE TO THE LEFT/RIGHT OR UP/DOWN CAN CAUSE PROBLEMS WITH ENGAGEMENT AND DAMAGE THE BNC CONNECTOR.

(3) Insert a 3/32" hex wrench into the mounting hole on the lower right-hand side of the unit and engage hex bolt (max. torque 1,7Nm [15 in.lbs]). Turn wrench clockwise until locking paw secures unit to mounting tray.
(4) Conduct a functional test of the unit (refer to "Adjustment/Test" below).

3. GPS Antenna Removal/Installation

A. Remove GPS Antenna
(1) Open baggage compartment door and remove access plate 211 KC (refer to 25-12-00).
(2) Disconnect antenna cable from antenna.
(3) Remove nuts and washers securing antenna to fuselage.
(4) Remove antenna from aircraft.

B. Install GPS Antenna
(1) Put gasket and antenna from outside, and backing plate from inside in position in fuselage.
(2) Install washers and nuts securing antenna to fuselage. Simultaneously connect ground cable to backing plate.
(3) Seal the antenna and gasket to fuselage using a good quality electrical sealant (Sikaflex-221 or equivalent, silicone-free).
(4) Connect antenna cable.
(5) Close baggage compartment door and install access plate 211 KC (refer to 25-12-00).

4. Memory Battery

WARNING: DISPOSE LITHIUM BATTERIES IN ACCORDANCE WITH APPLICABLE NATIONAL REGULATIONS. RECYCLE BATTERY IF POSSIBLE. LITHIUM BATTERIES ARE POTENTIALLY REACTIVE AND, IF NOT COMPLETELY DISCHARGED, SHOULD BE PROPERLY MANAGED AS A HAZARDOUS WASTE. IN THE EVENT OF BATTERY LEAKAGE, AVOID CONTACT WITH CORROSIVE ELECTROLYTE CONTAINED IN BATTERY.

A. A lithium battery is installed in the KMD 150. It is recommended to replace this battery after ten years.

5. Adjustment/Test

A. After installation, test system as follows:
(1) Ensure that the correct PCMCIA card is installed in the slot provided below the display.
(2) Place battery and avionics master switches in ON position.
(3) Energize the unit using the ON/OFF switch located on the lower right hand side of the display by pushing it in and rotating it fully clockwise for full brightness.
(4) Ensure that the initial Bendix/King header screen comes up.
(5) Conduct the post installation checkout as outlined in the KMD 150 Installation Manual.
(6) When all checks have been completed, turn unit and AVIONICS and BAT switches OFF.

NOTE: A flight test is recommended after KMD 150 unit installation to ensure proper function.

## INDEPENDENT POSITION DETERMINING – MAINTENANCE

1. General

A. This section covers that portion of the system which provides information to determine position and is mainly independent of ground installations. This includes the FlymapL multifunctional display / GPS.

B. The FlymapL multifunctional display is a panel-mounted, multi-functional system with an internal GPS receiver providing GPS navigation planning and the display of a great variety of navigation, airspace and warning information. The FlymapL system enables the display of GPS navigation information in Jeppesen® aeronautical and standard ICAO cartographic maps: Its database contains an elevation model for terrain proximity warning. Interfaces to other sensors and aircraft systems allow the display of additional information (weather information, NOTAMs/METAR/TAF, positions of and collision warnings with other aircraft), if the necessary subsystems are installed. The FlymapL multifunctional display system is approved for VFR operation only and is not intended to be used as the primary source for flight parameters and navigation data. For more information, refer to the FlymapL Operator's Manual.

The FlymapL is installed in a mounting frame located in the avionics rack in the mid section of the instrument panel. GPS signals are received by an antenna mounted on a bracket that is attached to the RH side support plate of the instrument panel.

C. The scope of maintenance is limited to the removal and installation of the components. For further information on the FlymapL, refer to the FlymapL Installation Manual, P/N 500-310, latest revision, or its Operator's Manual. For overhaul and repair, the manufacturer of the equipment has to be consulted.

2. FlymapL Unit Removal/Installation (Ref. Fig. 201)

A. Remove FlymapL Unit
(1) Ensure electrical power to aircraft is OFF.
(2) Disconnect battery (refer to 24-30-00).
(3) Remove glare shield (refer to 31-10-00).
(4) Disconnect all plug connectors and cables. Mark the removed cables as required.
(5) Remove both Philips-head screws of the FlymapL attachment on the rear side of the unit.
(6) Carefully pull out the unit from the rack.

B. Install FlymapL Unit

CAUTION: WHEN MOUNTING THE UNIT, DO NOT PRESS ON THE DISPLAY WINDOW AS DAMAGE MAY RESULT.

(1) Insert the unit carefully in the rack until it is in its final installation position.
(2) Install both Philips-head screws on the rear side of the unit to fix the FlymapL to its installation bracket.
(3) Connect all required plug connectors and cables to the rear side of the unit. Make sure that all plugs and cables are properly connected.
(4) Install glare shield (refer to 31-10-00).

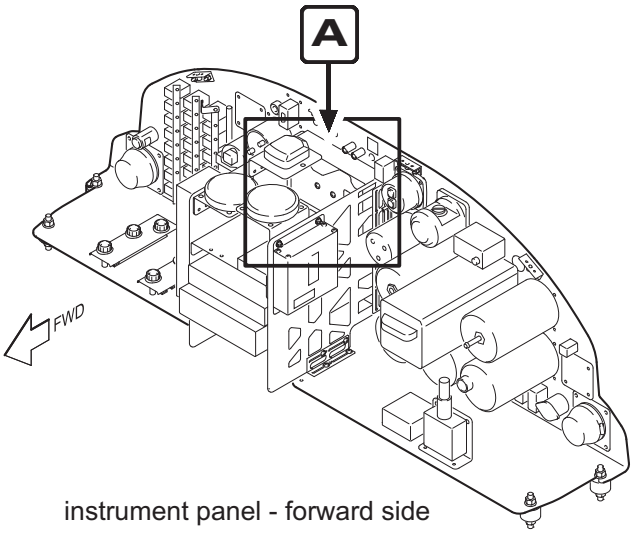


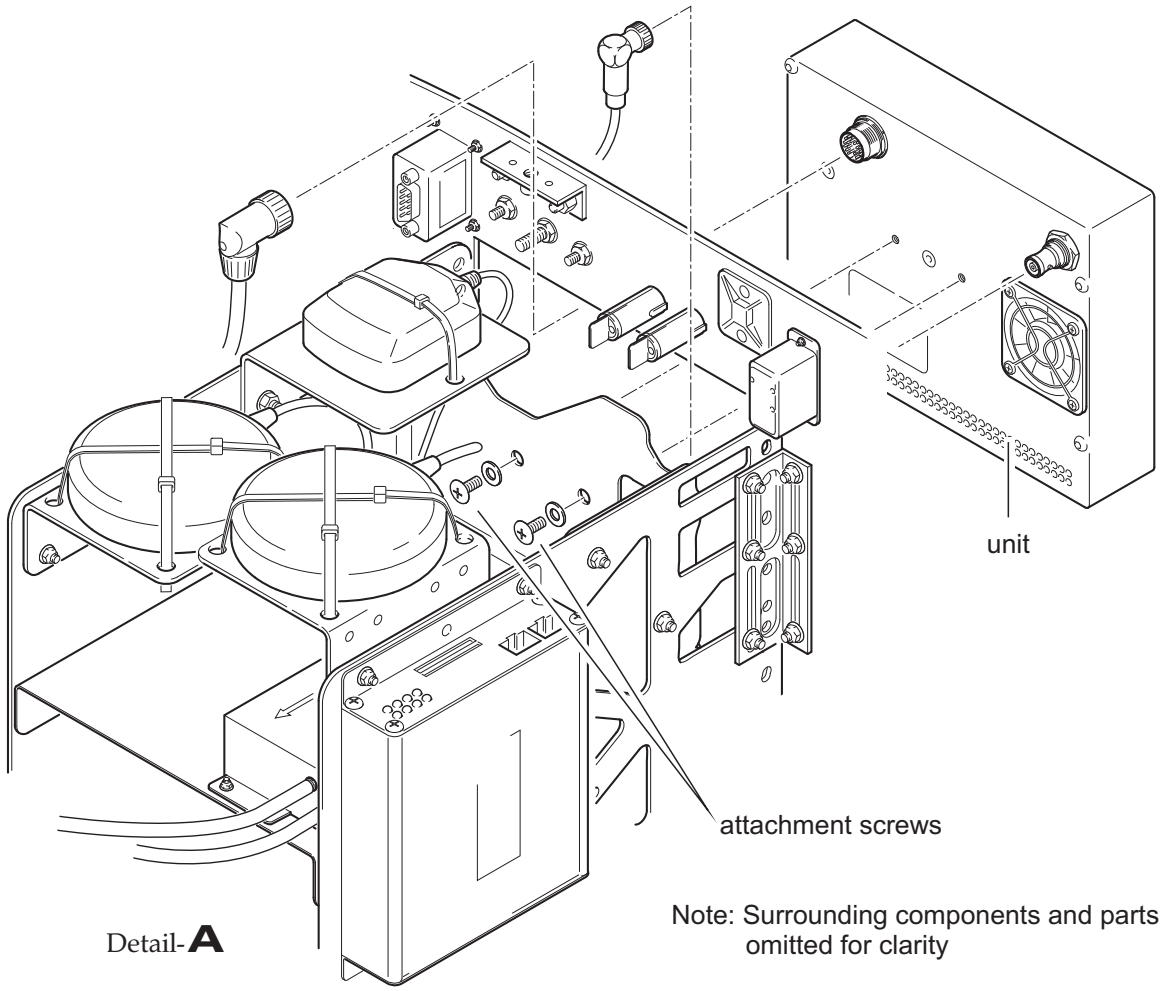


FlymapL Unit Installation
Figure 201

(5) Reconnect battery (refer to 24-30-00).
(6) Conduct a functional test of the installed unit.

3. GPS Antenna Removal/Installation (Ref. Fig. 202)

A. Remove FlymapL GPS Antenna
(1) Ensure electrical power to aircraft is OFF.
(2) Disconnect battery (refer to 24-30-00).
(3) Remove glare shield (refer to 31-10-00).
(4) Disconnect antenna cable from FlymapL unit and remove cable ties.
(5) Mark installation position and remove cable ties of the antenna attachment.
(6) Carefully remove antenna which is additionally secured to its installation bracket by double-sided adhesive tape. Remove tape and adhesive residue with acetone.

B. Install FlymapL GPS Antenna
(1) Install double-sided adhesive tape on the installation bracket of the GPS antenna and remove the protective film from the adhesive tape.
(2) Attach the antenna to the installation bracket in its correct installation position as previously marked and press it on the installation bracket. Secure the GPS-antenna with 2 cross-wise mounted cable ties.
(3) Install antenna cable properly and connect it to the FlymapL unit.
(4) Install glare shield (refer to 31-10-00).
(5) Reconnect battery (refer to 24-30-00).
(6) Perform a functional check of the unit.

4. AHRS Sensor Removal/Installation (Ref. Fig. 202)

A. Remove AHRS-Sensor
(1) Ensure electrical power to aircraft is OFF.
(2) Disconnect battery (refer to 24-30-00).
(3) Remove glare shield (refer to 31-10-00).
(4) Disconnect pitot and static pressure lines from the forward end of the sensor.

CAUTION: PLUG OR CAP THE SENSOR PORTS AS WELL AS THE END OF THE PRESSURE LINES IMMEDIATELY AFTER DISCONNECTION TO PREVENT DIRT OR FOREIGN OBJECTS ENTERING INTO THE SENSOR AND THE PRESSURE SYSTEM.

(5) Disconnect plug connector from sensor. Mark the removed plug as required.
(6) Mark the installation position of the sensor and remove the 4 nuts and washers from the sensor mounting.
(7) Carefully pull out the sensor from its installation bracket.

B. Install AHRS-Sensor
(1) Put the sensor on its mounting bracket and position it as previously marked.
(2) Secure the AHRS sensor on its installation bracket by installing the 4 attachment screws, washers and nuts.

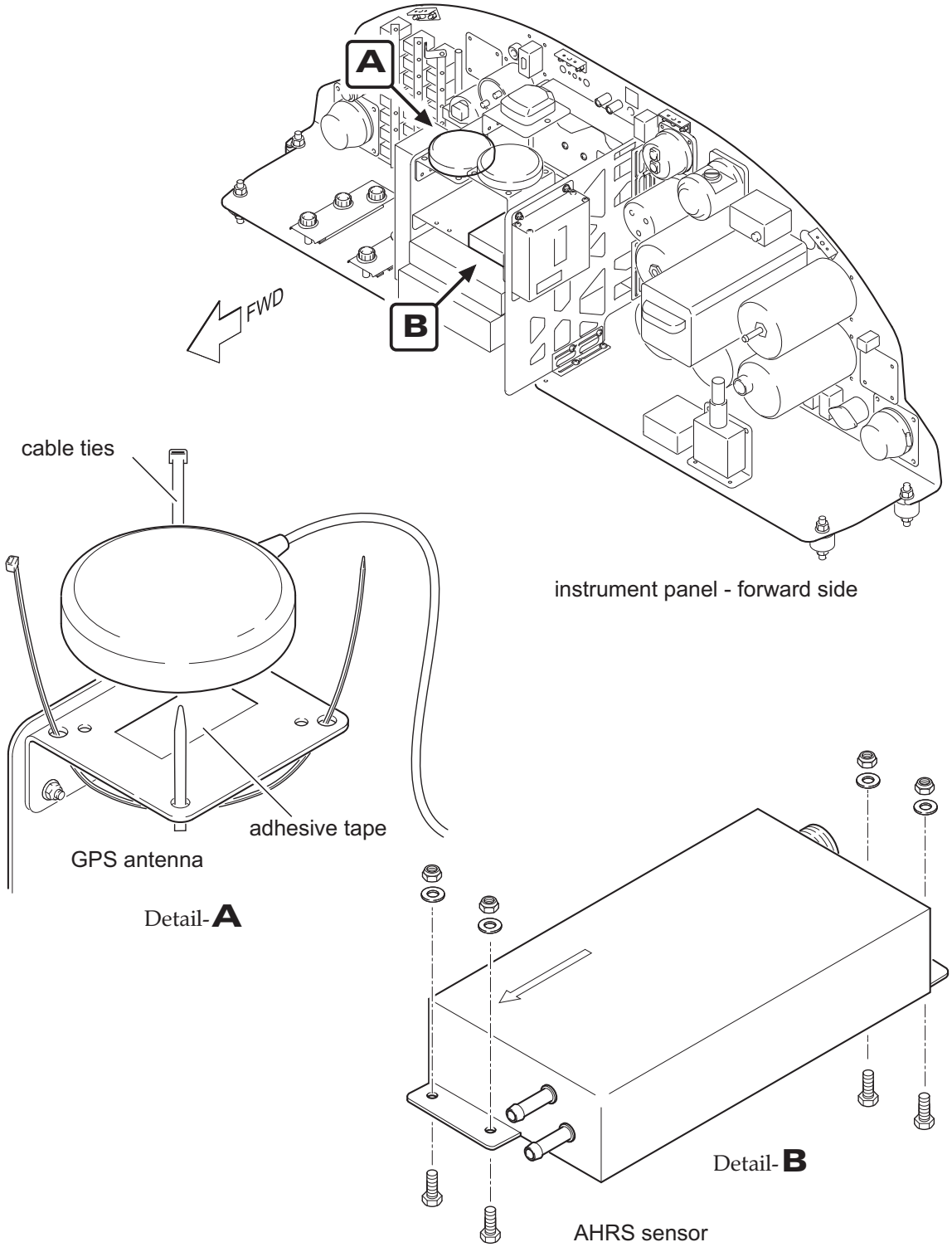


FLYMAP GPS Antenna / AHRS Sensor Installation
Figure 202

(3) Remove the plugs/caps from the sensor ports and the pressure lines.
Reconnect pitot and static pressure lines to the respective sensor port.
Make sure that the pressure lines are properly connected to the correct port and secure the connections with cable ties.
(4) Connect the required plug connector at the sensor. Make sure that the plug is properly connected.
(5) Perform a pitot-static system leak test (refer to 34-11-00).
(6) Install glare shield (refer to 31-10-00).
(7) Reconnect battery (refer to 24-30-00).
(8) Perform a functional check of the unit.

5. Inspection/Check

A. When the power is connected to the FlymapL it will automatically switch on. After a short startup period the map will appear. If in the centre of the screen a red cross appears together with the word GPS, no GPS signal is detected. Check GPS antenna connection and make sure that the GPS antenna has full view to the open sky without any obstacles.

If an aircraft symbol is displayed on the screen at the current location and the map is automatically align either with the aircraft in the centre (for North Up display) or with the aircraft near to the bottom of the screen (for Course Up display), the system is working properly (refer to the FlymapL Operating Manual for additional functions of the FlymapL display system).

NOTE: A flight test is recommended after FlymapL unit or AHRS sensor installation to ensure the proper functioning of the system.

## COLLISION WARNING SYSTEM – MAINTENANCE

1. General

A. This section covers miscellaneous avionic equipment. This includes the FLARM Collision Warning System. The scope of maintenance is limited to the removal and installation of the components. For further information on the equipment, refer to the appropriate publications of the equipment manufacturer. For overhaul and repair, the manufacturer of the equipment has to be consulted.

B. The FLARM receives position and motion information from an internal 16 channel GPS receiver with an external antenna. The predicted flight path is calculated by FLARM and the information transmitted by radio as low-power digital burst signals at one-second intervals. Provided that they are within receiving range, the signals are received by other aircraft also equipped with FLARM. The incoming signal is compared with the flight path predicted by calculation for the second aircraft. At the same time, FLARM compares the predicted flight path with known data on obstacles, including electric power lines, radio masts and cable cars. If FLARM determines the risk of dangerous proximity to one or more aircraft or obstacles, the unit gives the pilot warning of the greatest danger at that moment. The warning is given by a whistle sound (beep) and bright light emitting diodes (LED). The display also gives indication of the threat level, plus the horizontal and vertical bearing to the threat. The GPS and collision information received from other aircraft can also be made available for other equipment like the FLYMAP via a serial data output interface. For more information, refer to the Operating Manual of the FLARM Collision Warning Unit, latest revision.

The electrical circuit of the FLARM system is protected by a circuit breaker labeled “FLARM”. The GPS signals are received by an antenna which is mounted on a bracket attached to the RH side support plate of the instrument panel. The radio antenna for the transmission of the FLARM signals to other aircrafts equipped with FLARM is attached to the rear side of the instrument panel between the circuit breakers and the engine instruments and is protected by a rubber sleeve. The FLARM unit itself is mounted underneath the base plate of the instrument panel in the left section. The LED display unit of the FLARM system is located in the left section of the instrument panel.

C. For additional maintenance information on the FLARM unit, refer to the FLARM Installation Manual, latest revision. For the installation of software or database updates, refer to the documentation and manuals of the manufacturer of the FLARM Collision Warning System.

2. FLARM Unit Removal/Installation (Ref. Fig. 201)

A. Remove FLARM Unit
(1) Ensure electrical power to aircraft is OFF.
(2) Disconnect battery (refer to 24-30-00).
(3) Remove glare shield (refer to 31-10-00).
(4) Disconnect all plug connectors and cables.
Mark the removed cables, as required, and the installation position of the unit.
(5) Remove both attachment screws of the FLARM unit. While removing the attachment screw secure the FLARM unit by hand to prevent it from falling down.
(6) Carefully remove the unit.

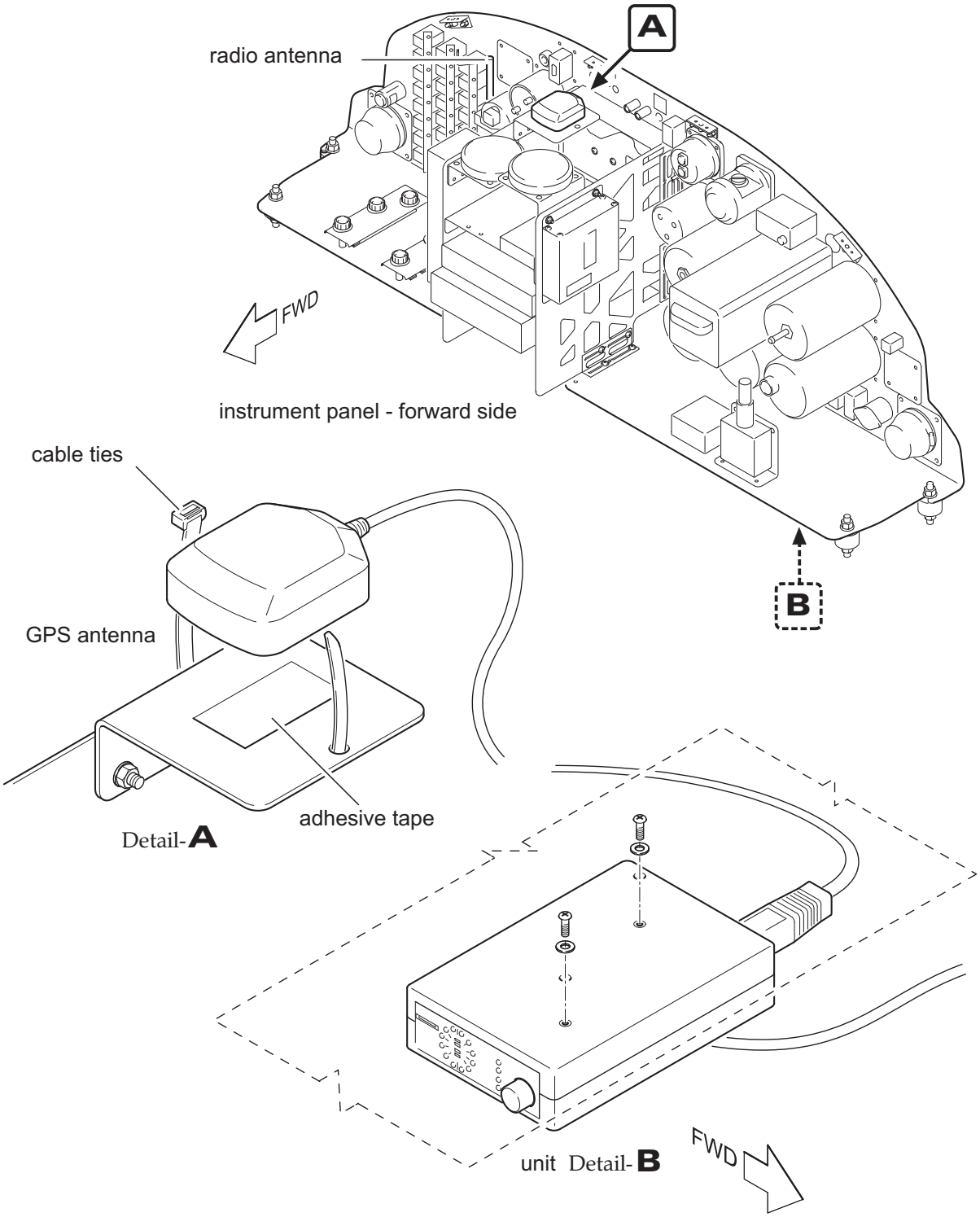


FLARM Components Installation
Figure 201

B. Install FLARM Unit
(1) Hold the unit correctly aligned at its installation position and install both attachment screws from the inside the instrument panel.
(2) Connect all required plug connectors and cables to the unit.
Make sure that all plugs and cables are properly connected.
(3) Install glare shield (refer to 31-10-00).
(4) Reconnect battery (refer to 24-30-00).
(5) Perform a functional check of the unit.

3. GPS Antenna Removal/Installation (Ref. Fig. 201)

A. Remove FLARM GPS Antenna
(1) Ensure electrical power to aircraft is OFF.
(2) Disconnect battery (refer to 24-30-00).
(3) Remove glare shield (refer to 31-10-00).
(4) Disconnect antenna cable from FLARM unit and remove the cable ties.
(5) Mark the installation position and remove the cable ties of the antenna attachment.
(6) Carefully take out the antenna which is additionally attached to the installation bracket by a Velcro tape.

B. Install FLARM GPS Antenna
(1) Install a Velcro tape at the bottom of the antenna and on its installation bracket (if applicable).
(2) Attach antenna to the installation bracket with its Velcro fastener in its correct installation position as previously marked. Secure with 2 cable ties.
(3) Install the antenna cable properly and connect it to the FLARM unit.
(4) Install glare shield (refer to 31-10-00).
(5) Reconnect battery (refer to 24-30-00).
(6) Perform a functional check of the unit.

4. Radio Antenna Removal/Installation

A. Remove FLARM Radio Antenna
(1) Ensure electrical power to aircraft is OFF.
(2) Disconnect battery (refer to 24-30-00).
(3) Remove glare shield (refer to 31-10-00).
(4) Disconnect antenna cable from FLARM unit and remove the cable ties.
(5) Mark the installation position and remove the cable ties of the antenna attachment.
(6) Carefully take the antenna out of the instrument panel interior.

B. Install FLARM Radio Antenna
(1) Install the rubber protection sleeve on the antenna (if applicable).
(2) Install the antenna in its installation holders on the rear side of the instrument panel as previously marked. Secure with cable ties.
(3) Install the antenna cable properly and connect it to the FLARM unit.
(4) Install glare shield (refer to 31-10-00).
(5) Reconnect battery (refer to 24-30-00).
(6) Perform a functional check of the unit.

5. Display Unit Removal/Installation

A. Remove FLARM Display Unit
(1) Ensure electrical power to aircraft is OFF.
(2) Disconnect battery (refer to 24-30-00).
(3) Remove glare shield (refer to 31-10-00).
(4) Disconnect plug connector from display unit and mark it as required.
(5) Carefully remove the display unit with suitable tools/means. The display unit is bonded to the instrument panel with double-sided adhesive tape (see also the FLARM Collision Warning System Operating Manual).
(6) Remove adhesive residue from instrument panel with acetone.

B. Install FLARM Display Unit
(1) Remove the protective film from the double-sided adhesive tape on the rear side of the FLARM display unit and install it in the instrument panel in its correct installation position.
(2) Connect plug connector on the rear side of the display unit. Make sure that the plug is properly connected.
(3) Install glare shield (refer to 31-10-00).
(4) Reconnect battery (refer to 24-30-00).
(5) Perform a functional check of the unit.

## DEPENDENT POSITIONING DETERMINING - MAINTENANCE PRACTICES

1. General

A. This section covers that portion of the system which provides information to determine position and is mainly dependent on ground installations. This includes the NAV portion of the Bendix/King KX 125 transceiver and the Bendix/King KT 76A/C transponder.

B. Bendix/King KX 125 Radio
For navigation purposes, data from ground stations can be received and indicated with the navigation portion of the Bendix/King KX 125 radio. The NAV signals are received by the NAV antenna located in the fuselage belly behind the baggage compartment. This antenna is embedded in the fuselage shell structure and is thus maintenance-free. However, if any maintenance should be required, contact the manufacturer.
For removal/installation of the KX 125 unit, refer to 23-10-00.

C. Bendix/King KT 76A/C Transponder
The KT 76A/C transponder is a radio transmitter and receiver which operates on radar frequencies. Receiving ground radar interrogations at 1030 MHz, it returns a coded response of pulses to ground-based radar on a frequency of 1090 MHz.
The KT 76A/C unit is mounted in the instrument panel in the avionics column.
The transponder antenna is installed on the bottom of the cabin, below the co-pilot's seat.

D. For additional maintenance information on the KT 76A/C transponder, refer to the KT 76C Installation Manual, P/N 006-10545-0001, latest revision, and to the KT 76A/C Maintenance Manual, P/N 006-15545-0002, latest revision.

2. Bendix/King KT 76A/C Transponder Removal/Installation

A. Remove KT 76A/C Transponder Unit
(1) Ensure electrical power to aircraft is OFF.
(2) Insert a 3/32" hex wrench into the jackscrew access hole on the face of the transponder unit and turn counterclockwise until locking paw releases unit from rack.
(3) Carefully pull unit out of the mounting tray.

B. Install KT 76A/C Transponder Unit
(1) Ensure all required plugs and cables at back of the mounting tray are properly connected.
(2) Carefully slide unit forward into the mounting tray until contact is made by the pins and then push the unit firmly into the mounting tray until fully engaged.
(3) Insert a 3/32" hex wrench into the mounting hole on the lower right-hand side of the unit and engage hex bolt (max. torque 1,7Nm [15 in.lbs]). Turn wrench clockwise until locking paw secures unit to mounting tray.
(4) Conduct a functional test of the unit.

3. Transponder Antenna Removal/Installation

A. Remove Transponder Antenna
(1) Ensure electrical power to aircraft is OFF.
(2) Remove access/inspection plate 211 BB (refer to 25-12-00) to gain access to the transponder antenna.
(3) Remove nuts and washers securing transponder antenna to fuselage.

NOTE: The connected antenna cable prevents the antenna from falling away from the aircraft.

(4) From outside the aircraft, disconnect antenna cable at connector and remove antenna from aircraft.

B. Install Transponder Antenna
(1) From outside the aircraft, connect antenna cable to the transponder antenna.
(2) From inside the fuselage, insert antenna studs through mounting holes and position the backing plate.
(3) Install washers and nuts securing transponder antenna to fuselage skin.
(4) Seal the antenna to fuselage using a good quality electrical sealant (Sikaflex-221 or equivalent, silicone-free).
(5) Install access/inspection plate 211 BB (refer to 25-12-00).

## DEPENDENT POSITIONING DETERMINING - MAINTENANCE

1. General

A. This section covers that portion of the system which provides information to determine position and is mainly dependent on ground installations. This includes the VOR/ILS receiver portion of the GNS 430(W) / GNS 530(W) / GTN 650 navigation management system (NMS), the VOR/ILS receiver portion of the SL30 COM/NAV transceiver as well as the Garmin GTX 327 / GTX 328 / GTX 330 mode S transponder.

B. Garmin GNS 430(W) / GNS 530(W) / GTN 650 System
The GNS 430(W) / GNS 530(W) / GTN 650 system is a fully integrated, panel mounted instrument, which contains a VHF communications transceiver, a VOR/ILS/GS receiver and a GPS navigation computer. The primary function of the VOR/ILS receiver portion of the equipment is to receive and demodulate VOR, localizer and glideslope signals. NAV/LOC/GS signals are received by the VOR/LOC antenna located in the fuselage belly behind the baggage compartment. This antenna is embedded in the fuselage shell structure and is therefore maintenance-free. However, if any maintenance should be required, contact the manufacturer.
For further information on the GNS 430(W) / GNS 530(W) / GTN 650 unit, refer to 23-10-00.

C. Garmin SL30 COM/NAV Transceiver
The SL30 is a combination of a VHF communications transceiver and a VHF navigation receiver which includes VOR, localizer and glideslope receiver, a built-in course deviation indicator and an independent voice-activated intercom.
The VOR, localizer and glideslope receivers provide 200 channels with a frequency range of 108 to 117.95 MHz for VOR, 108 to 111.95 for localizer and 329.15 to 335 MHz for glideslope reception. VOR/LOC/GS signals are received by the VOR/LOC antenna which is integrated into the lower fuselage shell structure behind the baggage compartment. This antenna is maintenance free and cannot be removed. However, if any maintenance or repair is necessary, contact the manufacturer.
For further information on the SL30 unit, refer to 23-10-00.

D. Garmin GTX 327 Transponder
The Garmin GTX 327 transponder, located in the middle avionics panel, receives interrogations from a ground-based secondary radar transmitter and transmits aircraft identification to the air traffic control center via Mode A transmissions and altitude information via Mode C.
The transponder antenna is installed on the bottom of the cabin, below the co-pilot's seat.

Refer to the Garmin GTX 327 Installation Manual, P/N 190-00187-02, latest revision, for additional maintenance information on the GTX 327 transponder system.

E. Garmin GTX 328 Mode S Transponder
The GTX 328 transponder is a radio transmitter and receiver that operates on radar frequencies, receiving ground radar or TCAS interrogations at 1030 MHz and transmitting a coded response of pulses to ground based radar on a frequency of 1090 MHz. The GTX 328 is equipped with IDENT capability that activates the special position identification (SPI) pulse for 18 seconds. The GTX 328 replies to Mode A, Mode C and Mode S all-call interrogation. As a level 2 transponder, the GTX 328 provides a downlink of aircraft information. Ground stations can interrogate Mode S transponders individually using a 24-bit ICAO Mode S address which is unique to that particular

aircraft. In addition, ground stations may interrogate a GTX 328 for its transponder data capability and aircraft flight ID which may be the registration number or another call sign.
The electrical circuit of the GTX 328 Mode S transponder is protected by a circuit breaker labeled "Transponder". The transponder antenna is installed on the bottom of the cabin, below the co-pilot's seat.

For a complete description of the GTX 328, refer to the Pilot's Guide of the GTX 328, P/N 190-00420-03, latest revision. For additional maintenance information on the GTX 328 Mode S transponder, refer to GTX 328 Installation Manual, P/N 190-00420-04, latest revision.

F. Garmin GTX 330 Mode S Transponder
The Garmin GTX 330 is a panel-mounted non-diversity Mode S transponder working like a radio transmitter and receiver that operates on radar frequencies, receiving ground radar or TCAS interrogations at 1030 MHz and transmitting a coded response of pulses to ground based radar on a frequency of 1090 MHz. The GTX 330 is equipped with IDENT capability that activates the special position identification (SPI) pulse for 18 seconds. The GTX 330 replies to Mode A, Mode C and Mode S all-call interrogation. As a level 2 transponder, the GTX 330 provides downlink of aircraft information. Ground stations can interrogate Mode S transponders individually using a 24-bit ICAO Mode S address, which is unique to that particular aircraft. In addition, ground stations may interrogate a GTX 330 for its transponder data capability and aircraft flight ID which may be the registration number or another call sign.
The electrical circuit of the GTX 330 mode S transponder is protected by a circuit breaker labeled "Transponder". The transponder antenna is installed on the bottom of the cabin, below the co-pilot's seat.

For a complete description of the GTX 330, refer to the Pilot's Guide of the GTX 330, P/N 190-00207-00, latest revision. For additional maintenance information on the GTX 330 Mode S transponder, refer to GTX 330 Installation Manual, P/N 190-00207-02, latest revision.

2. Garmin GTX 327 / GTX 328 / GTX 330 Transponder Removal/Installation

A. Remove Garmin GTX 327 / GTX 328 / GTX 330 Transponder
(1) Ensure electrical power to aircraft is OFF.
(2) Insert a 3/32" hex wrench into the jackscrew access hole on the face of the transponder unit and turn counterclockwise until locking paw releases unit from rack.
(3) Carefully pull unit out of the mounting tray.

B. Install Garmin GTX 327 / GTX 328 / GTX 330 Transponder

CAUTION: BE SURE NOT TO OVERTIGHTEN THE UNIT INTO THE RACK. APPLICATION OF HEX WRENCH TORQUE EXCEEDING 1,7 NM [15 IN.LBS] CAN DAMAGE THE LOCKING MECHANISM.

NOTE: It may be necessary to insert the hex wrench into the access hole on the unit face and rotate the mechanism 90° counterclockwise to ensure correct position prior to placing the unit in the rack.

(1) Slide unit carefully straight in the rack until it stops, about 1 inch short of the final position.

(2) Insert a 3/32 hex wrench into the access hole at the bottom of the unit face and engage hex bolt.
(3) Turn wrench clockwise until the unit is secured in the rack.
(4) Carry out a functional test of the installed unit in accordance with section 1.9 of the GTX 327 Installation Manual respectively section 3.4 of the GTX 328 / GTX 330 Installation Manual.

3. Transponder Antenna Removal/Installation

A. Remove Transponder Antenna
(1) Ensure electrical power to aircraft is OFF.
(2) Remove access/inspection plate 211 BB (refer to 25-12-00) to gain access to the transponder antenna.
(3) Remove nuts and washers securing transponder antenna to fuselage.

NOTE: The connected antenna cable prevents the antenna from falling away from the aircraft.

(4) From outside the aircraft, disconnect antenna cable at connector and remove antenna from aircraft.

B. Install Transponder Antenna
(1) From outside the aircraft, connect antenna cable to the transponder antenna.
(2) From inside the fuselage, insert antenna studs through mounting holes and position the backing plate.
(3) Install washers and nuts securing transponder antenna to fuselage skin.
(4) Seal the antenna to fuselage using a good quality electrical sealant (Sikaflex-221 or equivalent, silicone-free).
(5) Install access/inspection plate 211 BB (refer to 25-12-00).

# CHAPTER 51

# STRUCTURES

## TABLE OF CONTENTS


| Title | Chapter Section Subject | Page |
|---|---|---|
| STRUCTURES - GENERAL | 51-00-00 | 1 |
| Introduction | 51-00-00 | 1 |
| General Description | 51-00-00 | 1 |
| Structure Classes | 51-00-00 | 2 |
| COMPOSITE DAMAGE INVESTIGATION | 51-10-00 | 201 |
| General | 51-10-00 | 201 |
| Inspection Methods | 51-10-00 | 201 |
| Damage Classification | 51-10-00 | 202 |
| COMPOSITE REPAIR | 51-20-00 | 201 |
| General | 51-20-00 | 201 |
| Repair Requirements | 51-20-00 | 201 |
| Approved Materials | 51-20-00 | 202 |
| Tools, Equipment and Material | 51-20-00 | 203 |
| Material Data Sheet | 51-20-00 | 204 |
| Repair of Sandwich Components | 51-20-00 | 217 |
| Repair of Monolithic Components | 51-20-00 | 222 |
| Exterior Finish | 51-20-00 | 223 |

# STRUCTURES - GENERAL

## 1. Introduction

A. This chapter provides a general overview of the structural design. The chapter contains information and procedures applicable to all composite repairs as well as information and procedures for aircraft painting and priming.

B. Please contact AQUILA Aviation GmbH for support in case damage to the aircraft structure the cause of which is unknown or suspect, and prior to major repairs to obtain detailed information.

AQUILA Aviation GmbH
Flugplatz
14959 Schönhagen
Germany

Tel.: +49(0) 33731 707-0
Fax.: +49(0) 33731 707-11

## 2. General Description

Most of the aircraft structure is made from composite materials. Glass-fiber (GFRP) and carbon-fiber reinforced plastics (CFRP) are used which are bedded in an epoxy resin matrix. The aircraft structure consists of monolithic GFRP or CFRP shells and structure components as well as sandwich shells which have a rigid foam core.

A. Fuselage
The fuselage with the vertical and horizontal stabilizers represents one component. Including the vertical stabilizer, it consists of two half-shells. The fuselage portion of the half-shells is made from solid (non-foam) fiberglass laminate, the vertical stabilizer has a sandwich structure. The fuselage GFRP skin is reinforced by four carbon-fiber stringers, arranged lengthwise through the entire fuselage.
Four ring frames and a baggage compartment frame provide support to the fuselage shells in the tail section. A landing gear bulkhead, a seat bulkhead and a side-force bulkhead carry single loads.
The front of fuselage ends with the firewall which includes the metal fittings for supporting the engine mount. The firewall, constructed of a GFRP/CFRP composite sandwich, has a fire protection lining on the front side which consists of an especially fire-resistant ceramic fleece and a stainless-steel sheet.
The landing gear bulkhead which together with the seat bulkhead supports the main landing gear struts, is complemented upwards through a compact CFRP/GFRP roll-over bar.

B. Wings
The plan view of the wing is a triple trapezoid that is complemented by a winglet at its end. The wing has top and bottom shells, constructed of a GFRP composite sandwich and locally reinforced by CFRP straps. The aircraft has a one-piece wing because the wing spar is manufactured in one piece and is continuous from wing tip to wing tip. The I-section spar has caps made from unidirectional carbon-fiber and a GFRP composite sandwich web.
Each wing half ends inboard with a front root rib and a rear root rib, which are mounted to the fuselage center section with a bolt apiece.

The four lateral force bolts are inserted from the cabin through the fuselage bushings into the wing bolt casings and secured axially with screws.
The outboard end of the wing has a winglet with the NAV lights and the fuel tank vents. The inboard portion of the wings contains an integral fuel tank with a capacity of 60 liters per wing.
The ailerons are located at the wing trailing edge near the wing tips. They are of a semi-monocoque sandwich construction consisting of rigid foam core and glass and carbon fiber layers.
The flaps, of a semi-monocoque CFRP sandwich construction, are mounted to the trailing edge of each wing between the inboard end of the ailerons and the fuselage.
They are attached to the wings using hinges that are located below the bottom of the wing. This results in the gap between wing trailing edge and flap leading edge and increases as the flap extend. This increases the lift force and simultaneously the drag force.

C. Stabilizers
The vertical and horizontal stabilizers, as well as the elevator and rudder are of semi-monocoque design consisting of shells fabricated from GFRP sandwich reinforced with CFRP.
The vertical and the horizontal stabilizers have a main spar and a rear shear web with integrated hinges. The horizontal stabilizer is molded to the fuselage and cannot be removed.

3. Structure Classes

A. Primary Structure
These parts are important for the structural integrity of the aircraft. For example: fuselage, wing, stabilizer and control surface shells, spars, frames, joints, brackets.

B. Secondary Structure
These parts are not important for the structural integrity of the aircraft. For example: panels, covers, access plates, fairings.

## COMPOSITE DAMAGE INVESTIGATION

1. General

A. This section contains maintenance information and procedures such as investigation and damage classification applicable to fiber laminate structure components.

2. Inspection Methods

A. Visual Inspection
Most damage to a composite structure will be visually detectable. A wide variety of component surface discontinuities such as scratches, cracks, dimples, dents and creases may indicate damage. The use of optical aids such as flashlights, inspection mirrors and simple magnifiers is recommended. To allow remote visual inspection of internal surfaces or other inaccessible areas, a borescope can be used.
If the exterior surface is damaged, e.g. paint cracks, always assume that the underlying structure may also be damaged. To determine the extent of composite damage, other inspection methods may be additionally required.

B. Tap Testing
Tap testing is used for a quick evaluation of composite surfaces to detect the presence of delamination or debonding. The tap testing procedure consists of lightly tapping the surface of the part with a coin, special light hammer or any another suitable object. The acoustic response is compared with that of a known good area. Areas of disbonding or delamination will sound “flat” or “dead”, undamaged areas should sound sharp and clear. The tap testing method should be used in conjunction with the exploration method.

C. Ultrasonic Inspection
Ultrasonic inspection can easily detect subsurface discontinuities, such as cracks, shrinkage cavities, bursts, pores, delaminations and porosity. This method is based on the fact that the amount of reflection that occurs when a sound wave strikes an interface depends largely on the physical state of the materials forming the interface and to a lesser extent on the specific physical properties. The ultrasonic instrument generates an ultrasonic pulse, detects and amplifies the returning echo and displays the detected signal on a cathode ray tube or similar display. For specific inspection procedures refer to manufacturer publications of the ultrasonic test equipment used. If a flaw is detected, further exploration of the suspect composite area as described below is required.

D. Exploration
Exploration is an extension of visual inspection, but requires removal of the facing coat. The exploration method must be employed when subsurface damage has been detected by tap testing, during ultrasonic inspection or to determine the precise extend of damage.

3. Damage Classification

A. Damage to composite structures can be divided into four classes:

(1) Damage Class 1
Severe, extensive damage that requires partial component restoration or general component replacement.

(2) Damage Class 2
Damage to primary or secondary structures with sandwich penetration such as holes or fractures. Both sides of sandwich penetrated and the laminate on both sides must be repaired and the core section replaced.

(3) Damage Class 3
Damage only to outer laminate layers on one side of a sandwich construction without or only minor gouging of core material.

(4) Damage Class 4
Damage to outer surface of composite structures such as superficial scars, scratches, surface abrasion or erosion. No holes or laminate fractures.

B. Minor Damages
Only the damages listed below can be considered as small damages and repaired by qualified personnel without a repair scheme which has been approved by the manufacturer. In general all damages in force introduction or reinforced areas (i.e. spars, ribs) have to be carried out by certified repair stations for composite aircraft structure works.

(1) Any damages limited to varnish or filler.

(2) Damages not exceeding the permissible dimensions of holes, dents and cracks that are listed in the following table:

| Part | Average hole or dent diam. | Crack length |
|---|---|---|
| Front fuselage (cockpit) | 50 mm [2 in.] | 75 mm [3 in.] |
| Rear fuselage (tail boom) | 25 mm [1 in.] | 50 mm [2 in.] |
| Wing | 75 mm [3 in.] | 100 mm [4 in.] |
| Stabilizers | 25 mm [1 in.] | 50 mm [2 in.] |
| Flap, Aileron | 25 mm [1 in.] | 50 mm [2 in.] |
| Rudder, Elevator | 25 mm [1 in.] | 50 mm [2 in.] |
| Cowling, Fairings | 75 mm [3 in.] | 100 mm [4 in.] |

(3) Damages not affecting glass and carbon rovings or carbon tapes in the primary structure.

(4) No class 1 damages and no damages in critical areas. Refer to figure 201 for an overview of the main critical areas of the aircraft.

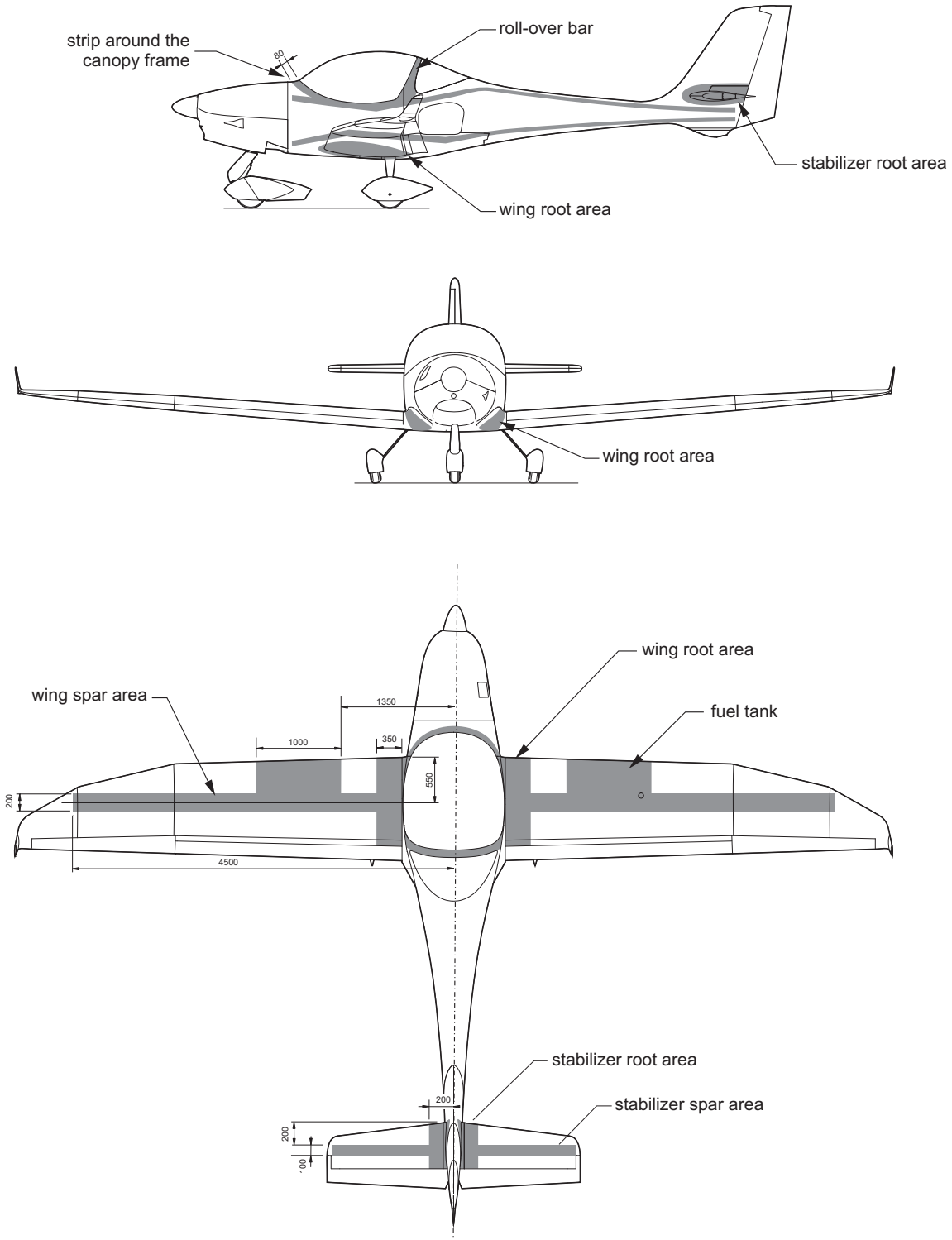


Damages - Critical Areas
Figure 201

## COMPOSITE REPAIR

1. General

A. This section covers required information to complete successful repairs to aircraft components that are made from fiber laminate. Necessary repair data, such as ply lay-up and ply orientation for various areas, as well as repair materials and procedures are provided. Not included are general practices used during most composite repairs, such as cleaning and preparing the damaged area, proper preparation of materials, mixing and applying resin or proper curing the repair. Personnel must be familiar with these practices prior to attempting fiberglass composite repairs on this aircraft.

2. Repair Requirements

A. The following requirements must be met:
(1) Repairs for which no description is given in this chapter may only be carried out in accordance with a repair scheme which must be approved in accordance with the procedures established by the competent certifying authority.
(2) Only damages classified as minor damages (refer to 51-10-00) can be repaired by qualified personnel without a repair scheme which has been approved by the manufacturer or cognizant regulatory authority.
(3) In general all damages in force introduction or reinforced areas (i.e. spars, ribs) have to be carried out by certified repair stations for composite aircraft structure works or properly certified and trained persons.
(4) Class 4 damages (refer to 51-10-00) don't have to be repaired immediately after detection if adequately protected from environmental conditions (e.g. adhesive tape).
(5) Repairs must be completed by competent technicians trained in composite repair.
(6) Before beginning a repair make sure all required tools, equipment and materials are ready. If you are not familiar with the proper use of all the repair tools, never attempt a fiberglass composite repair.
(7) Use the approved materials outlined in this section only. Prepare materials in accordance with information given in this manual and manufacturer instructions.
(8) Review material safety data sheets for material to be used. Observe shelf life.
(9) Repairs should be made in a clean, temperature controlled environment. Optimal repair temperature lies between 16°C and 27°C (60°F - 80°F) with 50% relative humidity or less.
(10) It is recommended to prepare a test specimen during actual repair which can be subjected to a destructive test to establish the quality of the adhesive bond in the repaired part.
(11) To preserve the good aerodynamic characteristics of the aircraft smooth and precisely contour repaired surfaces.
(12) All control surfaces have to be checked for weight and control surface moment after repair.

B. Safety Precautions
(1) Read and adhere to all manufacturer instructions, warnings and cautions on the materials and chemicals used.
(2) Sanding fiber laminates results in a fine dust that may cause skin and/or respiratory irritation unless suitable protection is used.
(3) Never handle fabric materials with bare hands, use clean cotton or rubber gloves.

(4) Solvents used in repair processes are composed of a group of chemicals that often prove toxic. To avoid toxic poisoning, work in a well-ventilated area only and always be alert for symptoms of poisoning. If symptoms are observed, it is vital to immediately remove the person from the contaminated area.
(5) Protective clothing should be worn to avoid skin contact with chemical substances.
(6) Many of the chemicals used are flammable.

3. Approved Materials

| Description | Number / Specification | Manufacturer / Supplier |
|---|---|---|
| Carbon fiber roving | Tenax-J HTA-1600 | TENAX fibers GmbH & Co.KG<br>Kasinostr. 19-21<br>42097 Wuppertal |
| Glass fiber roving | EC14(2400)P185 | Vetrotex Reinforcement GmbH<br>Bicherouxstraße 61<br>52134 Herzogenrath |
| Carbon fiber tape | Carbon UD-UD CST240/60 | Epo GmbH<br>Siemensring 31-33<br>47877 Willich |
| Glass fiber fabric | IG 02034<br>IG 90070<br>IG 92110<br>IG 92125<br>IG 92140 | P-D INTERGLAS GmbH<br>Benzstraße 14<br>89155 Erbach |
| Carbon fiber fabric | IG 98140 | P-D INTERGLAS GmbH<br>Benzstraße 14<br>89155 Erbach |
| Resin repair system | Scheufler L285<br>H285, H286, H287 | Martin G. Scheufler<br>Kunstharzprodukte GmbH<br>Am Ostkai 21/22<br>70327 Stuttgart |
| Cell foam | Divinicell H60 | Lange+Ritter GmbH<br>Dieselstr. 25<br>70839 Gerlingen |
| Polyester filler | | any source |

4. Tools, Equipment and Material

| | Quantity | Equipment | Parts No. | Manufacturer |
|---|---|---|---|---|
| 6.A. | as required | sandpaper 30-grit to 400 grit | - | commercially available |
| | as required | isopropyl alcohol | - | commercially available |
| | as required | peel ply | - | commercially available |
| | as required | release film | - | commercially available |
| | as required | hot glue | - | commercially available |
| | as required | cotton cloth | - | commercially available |
| | 1 | mixing container | - | commercially available |
| | as required | stir sticks | - | commercially available |
| | 1 | scale | - | commercially available |
| | 1 pair | gloves | - | commercially available |
| 8.A. | as required | masking tape 2-inch | - | commercially available |
| | as required | sandpaper 240-grit to 360-grit | - | commercially available |
| | as required | cotton cloth | - | commercially available |
| | as required | isopropyl alcohol | - | commercially available |

| | | | | |
|---|---|---|---|---|
| | as required | 2k epoxy primer<br>activator<br>thinner | LE2001<br>XK206<br>EV301 | DuPont |
| 8.B. | as required | cotton cloth | - | commercially available |
| | as required | isopropyl alcohol | - | commercially available |
| | as reqired | coating<br>activator<br>thinner | PUR EV310<br>PUR EV313<br>PUR EV303 | DuPont |

5. Material Data Sheet

A. The material data sheet in combination with figures 202 (fuselage), 203 (wing), 204 (flap), 205 (aileron), 206 (elevator) and 207 (rudder) should be used for information on ply lay-up and ply orientation. The item numbers give the order in which the layers are applied.

| Item No. | Layers | Description | Remarks |
|---|---|---|---|
| 1 | 1 | Interglas 92110 | width 80 mm |
| 2 | 1 | Interglas 92110 | width 100 mm |
| 3 | 1 | Interglas 92125 | overall |
| 4 | 1 | Interglas 92140 | |
| 5 | 1 | Interglas 92125 | max. width 125 mm |
| 6 | 2 | Interglas 92125 | width 200 mm |
| 7 | - | DH 60-06 | rigid foam |
| 8 | 1 | Interglas 92125 | |
| 9 | 1 | Interglas 92110 | |
| 10 | 4 | CST 240/60 | overall |
| 11 | 3 | CST 240/60 | fr. wind. up to end of tail |
| 12 | 7 | CST 240/60 | overall |
| 13 | 3 | CST 240/60 | |
| 14 | 5 | CST 240/60 | |
| 15 | 2 | CST 240/30 | |
| 16 | 1 | Interglas 92140 | overall |
| 17 | 4 | CST 240/30 | up to baggage bulkhead |
| 18 | 2 | Interglas 92125 | stringer covering |
| 19 | 1 | Interglas 92125 | up to baggage bulkhead |
| 20 | 1 | Interglas 92125 | sidewalls only |
| 21 | 1 | Interglas 92140 | bottom only |
| 22 | 1 | Interglas 92125 | bottom only |
| 23 | 1 | Interglas 92140 | sidewalls only |

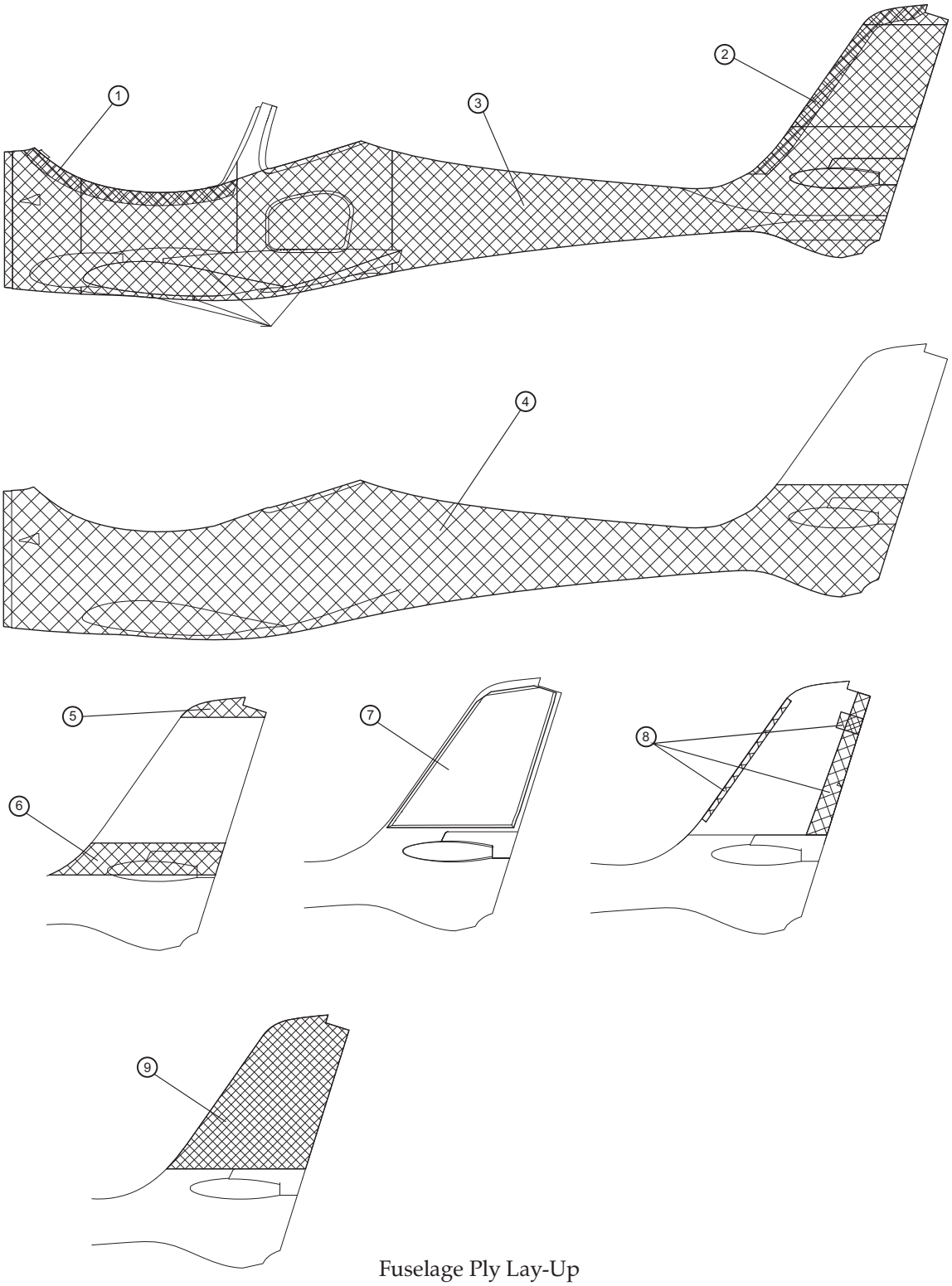


Fuselage Ply Lay-Up
Figure 202 (1)

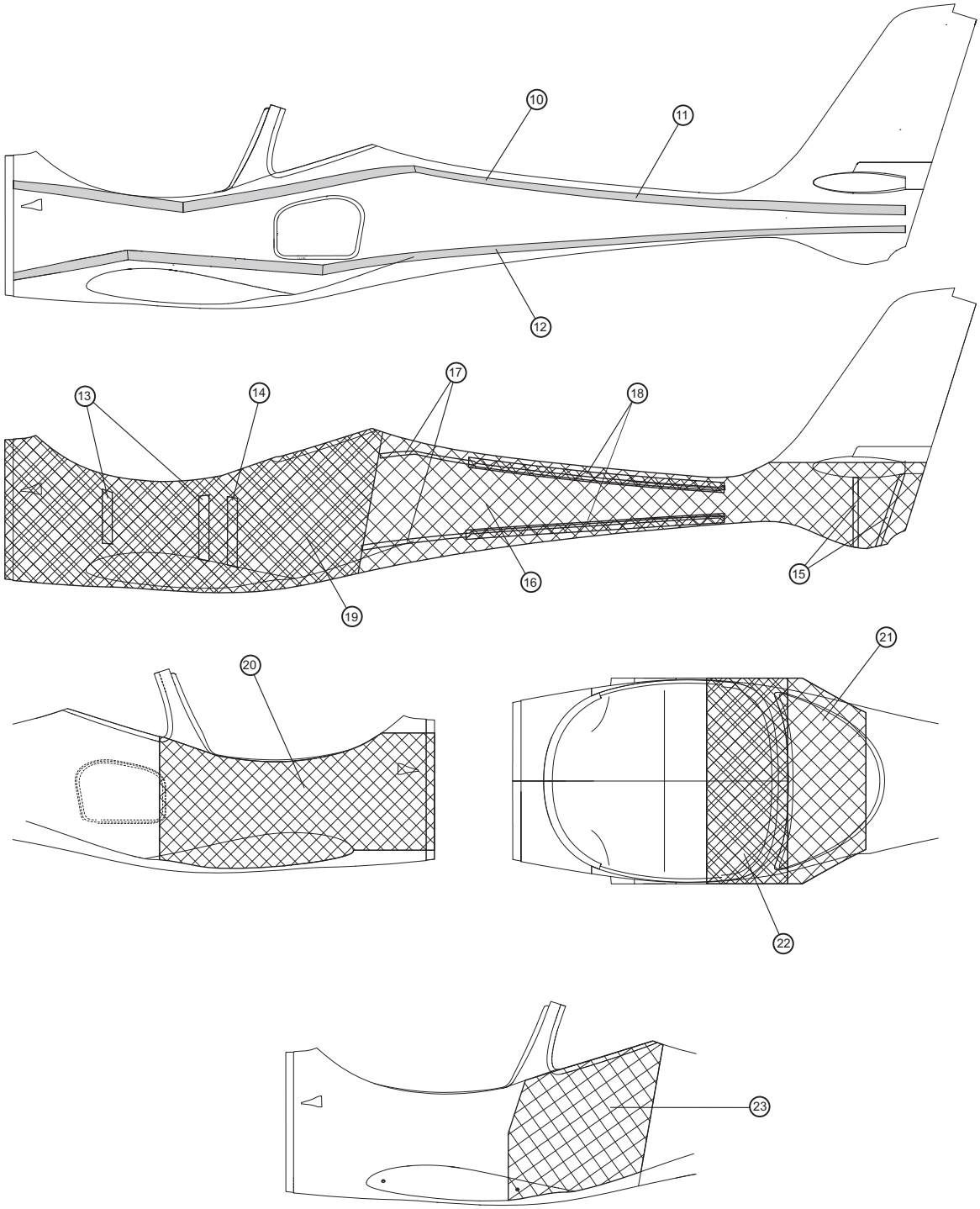


Fuselage Ply Lay-Up
Figure 202 (2)

| Item No. | Layers | Description | Remarks |
|---|---|---|---|
| 1 | 1 | Interglas 92110 | width 110 mm |
| 2 | 1 | Interglas 92125 | |
| 3 | 1 | Interglas 92125 | width 100 mm strip, overlap in winglet area |
| 4 | 1 | Interglas 92125 | |
| 5 | 1 | Interglas 92125 | |
| 6 | 2 | Interglas 92125 | up to aileron |
| 7 | 1 | Interglas 92125 | up to y=1030 mm |
| 8 | 1 | Interglas 92125 | |
| 9 | 2 | Interglas 92125 | |
| 10 | 2 | Interglas 92125 | only left-hand side |
| 11 | 2 | CST 240/60 | length 800 mm |
| 12 | 1 | CST 240/60 | length 280 mm |
| 13 | 1 | CST 240/60 | length 330 mm |
| 14 | 1 | CST 240/60 | |
| 15 | 2 | CST 240/30 | obliquely outwards |
| 16 | 2 | CST 240/30 | |
| 17 | 2 | roving 5x EC 14-2400 P185 | |
| 18 | 8 | roving 5x EC 14-2400 P185 | |
| 19 | 6 | roving 5x EC 14-2400 P185 | |
| 20 | 1 | Interglas 90070 | |
| 21 | 1 | Interglas 92110 | from 1350 mm |
| 22 | 1 | Interglas 92125 | up to 2350 |
| 23 | 1 | Interglas 92110 | |
| 24 | 1 | Interglas 92110 | circle 123 mm x 63 mm, centered beneath filler |
| 25 | 1 | Interglas 92125 | strip width 80 mm, overlap in winglet area |
| 26 | | Interglas 92125 | strip 240 mm x 50 mm, bent around filler |
| 27 | 3 | roving 5x EC 14-2400 P185 | wrapped around filler |
| 28 | 3 | Interglas 92125 | graduated by 5 mm |
| 29 | 1 | Interglas 90070 | |
| 30 | 1 | Interglas 92110 | |
| 31 | | DH 60 - 08 | rigid foam |
| 32 | | Pregnit GGBE/GMBE | GFRP plate |
| 33 | 2 | CST 240/30 | at 50% winglet depth, up to 60 mm before winglet end |

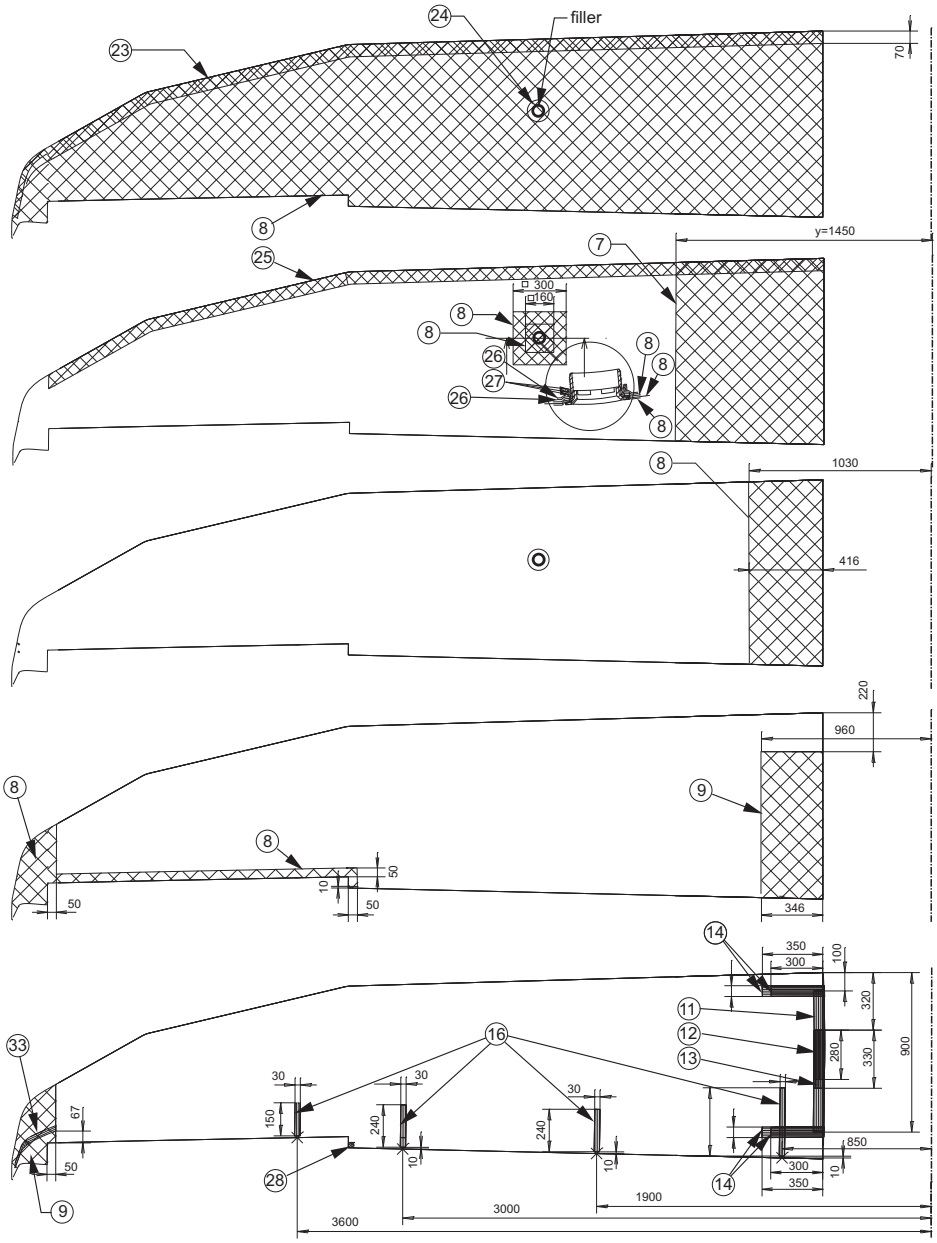


Upper Wing Shell Ply Lay-Up
Figure 203 (1)

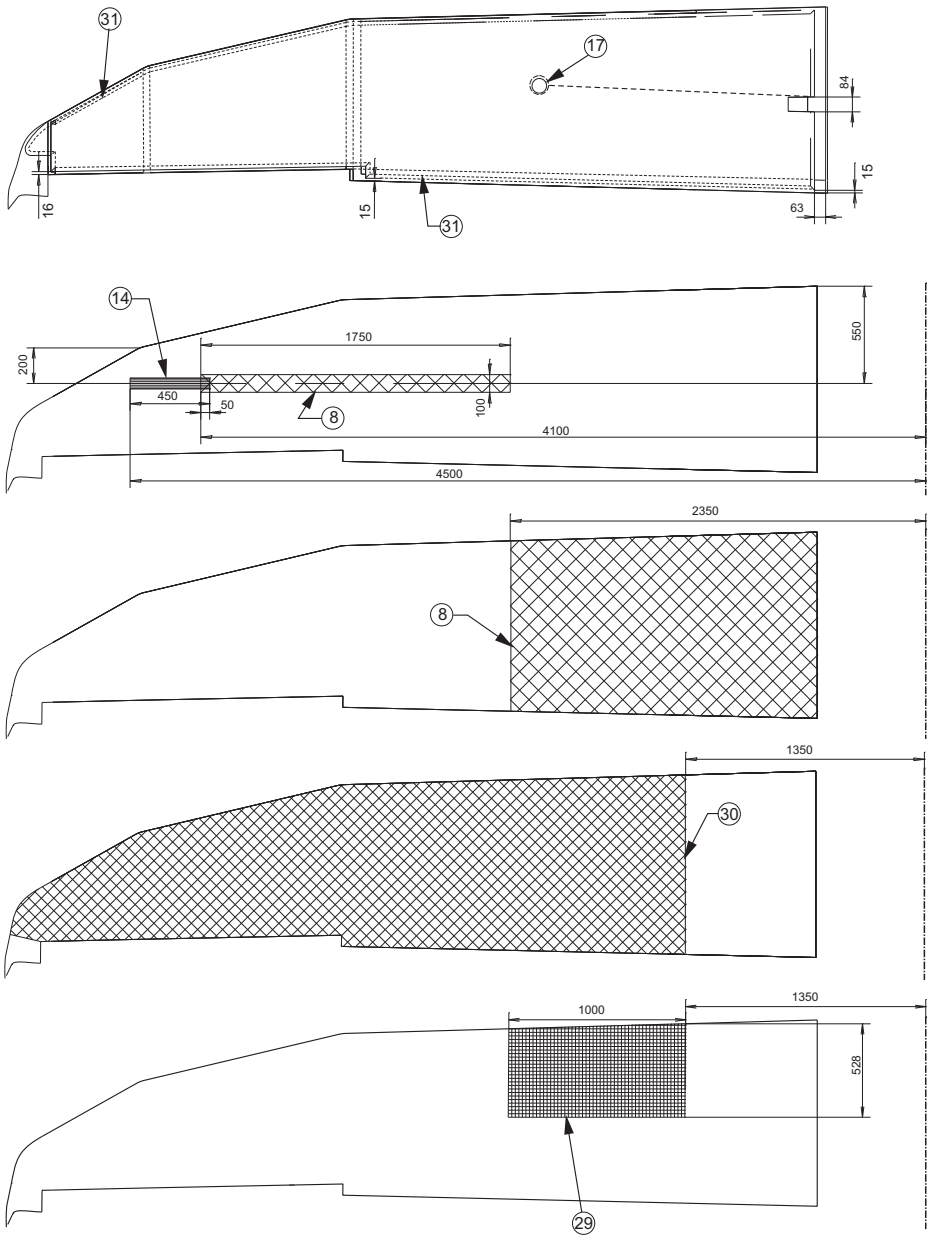


Upper Wing Shell Ply Lay-Up
Figure 203 (2)

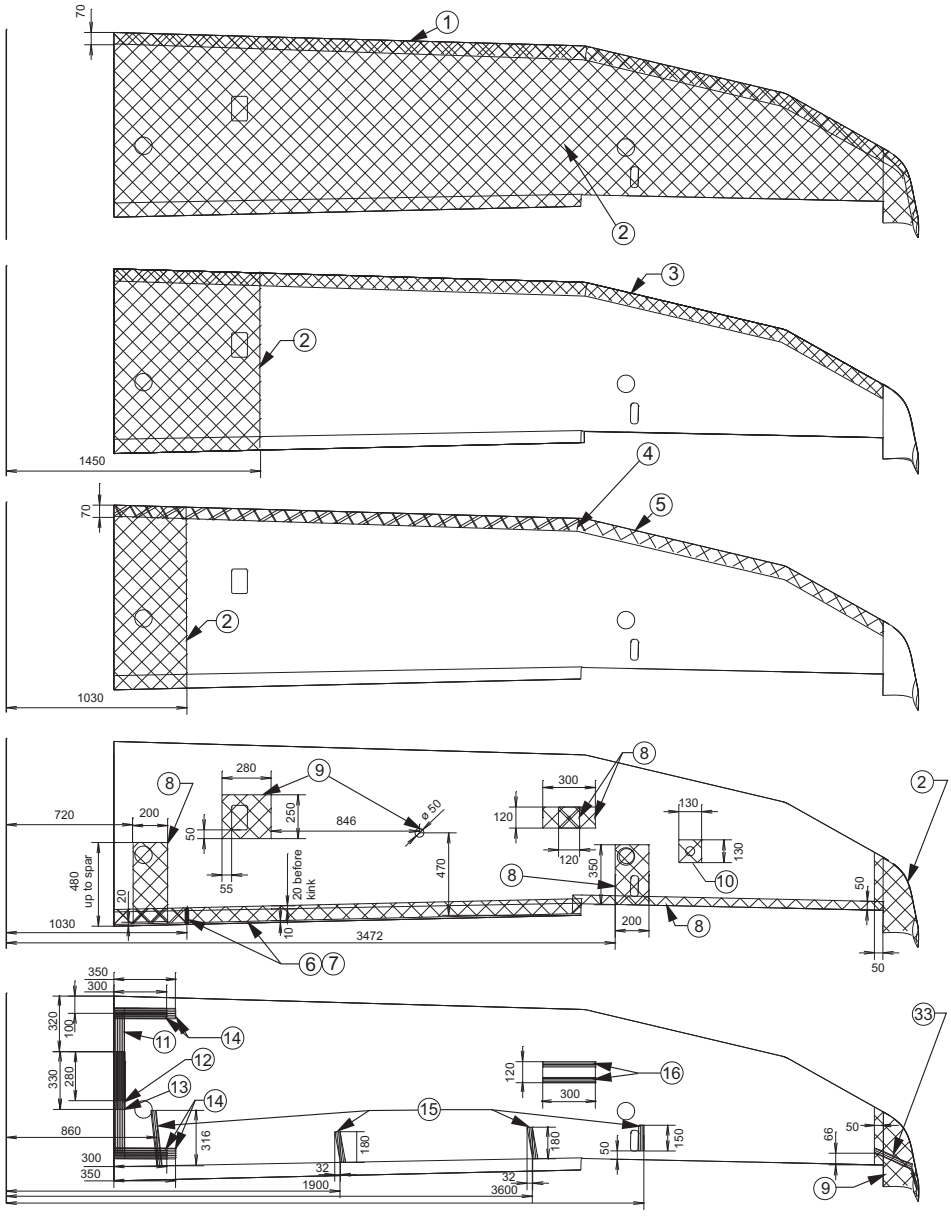


Lower Wing Shell Ply Lay-Up
Figure 203 (3)

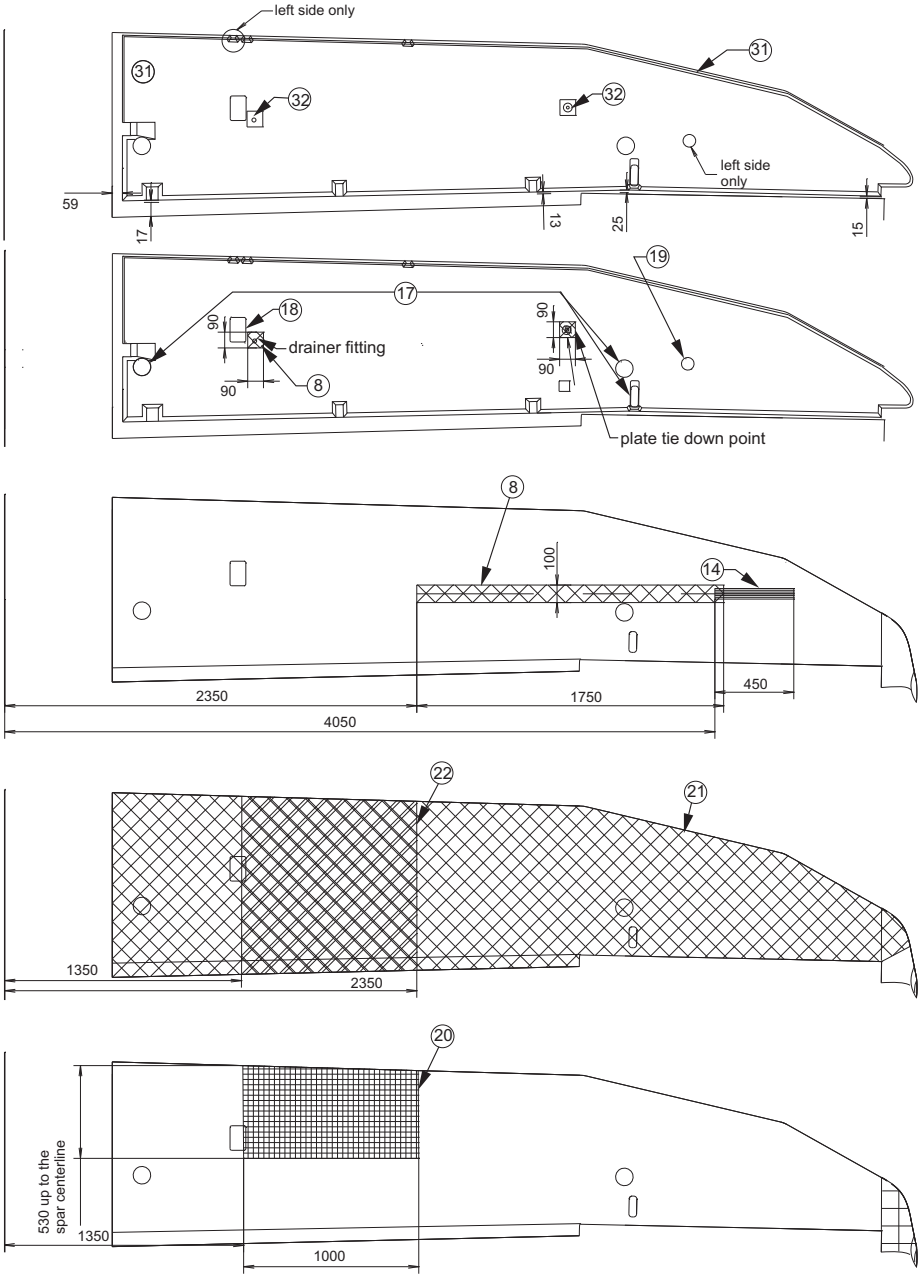


Lower Wing Shell Ply Lay-Up
Figure 203 (4)

| Item No. | Layers | Description | Remarks |
|---|---|---|---|
| 1 | 1 | Interglas 90070 | overall |
| 2 | 1 | Interglas 98140 | overall |
| 3 | 1 | Interglas 98140 | width 400 mm (on fuselage side) |
| 4 | 1 | CST 240/60 | |
| 5 | - | DH60-03 | rigid foam |
| 6 | 1 | Interglas 98140 | overall |

Ply lay-up for upper / lower flap shell and LH / RH flap symmetrical.

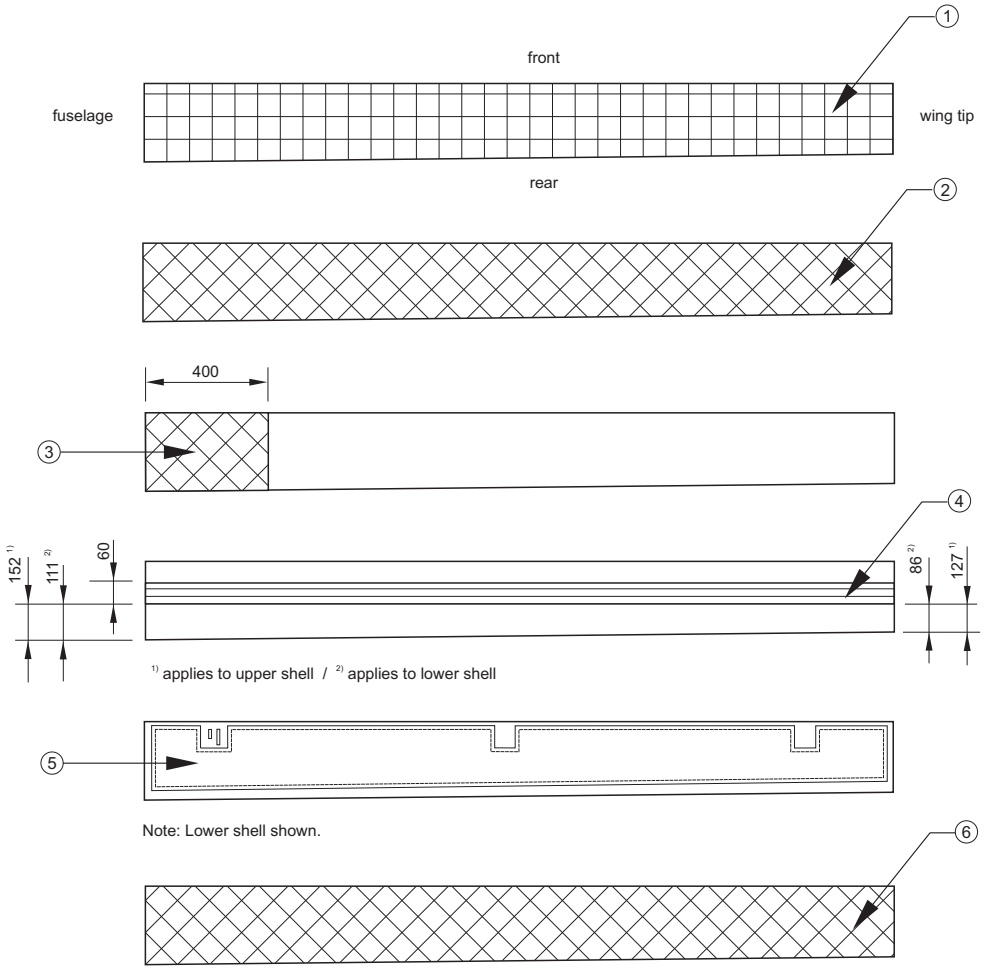


Flap Shell Ply Lay-Up
Figure 204

| Item No. | Layers | Description | Remarks |
|---|---|---|---|
| 1 | 1 | Interglas 92110 | overall |
| 2 | 2 | CST 240/30 | |
| 3 | 2 | Interglas 92125 | |
| 4 | - | DH60-03 | rigid foam |
| 5 | 1 | Interglas 92110 | |
| 6 | 1 | Interglas 92110 | overall |

Ply lay-up for upper / lower aileron shell and LH / RH aileron symmetrical.

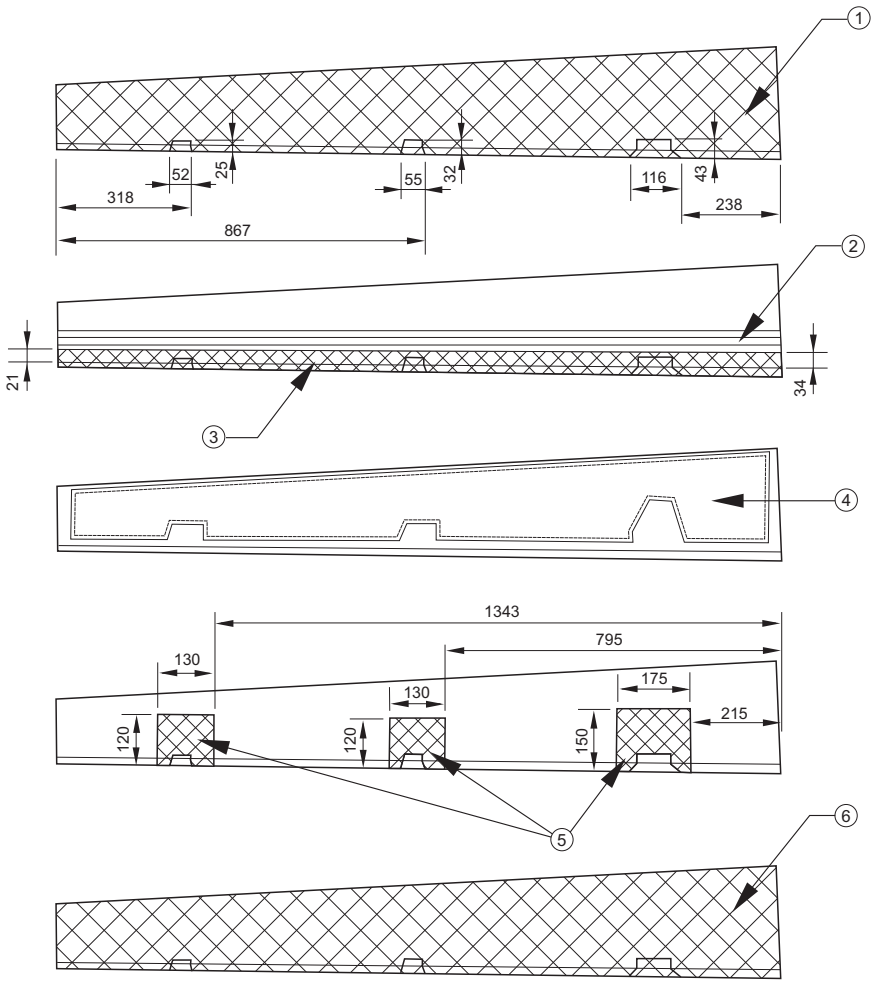


Aileron Shell Ply Lay-Up
Figure 205

| Item No. | Layers | Description | Remarks |
|---|---|---|---|
| 1 | 1 | Interglas 92110 | overall |
| 2 | 1 | Interglas 92110 | |
| 3 | 1 | Interglas 92125 | |
| 4 | 1 | Interglas 92125 | |
| 5 | 1 | CST 240/30 | |
| 6 | - | DH60-03 | rigid foam |
| 7 | 1 | Interglas 92110 | |
| 8 | 1 | Interglas 92110 | overall |

Ply lay-up for upper / lower elevator shell and LH / RH elevator symmetrical.

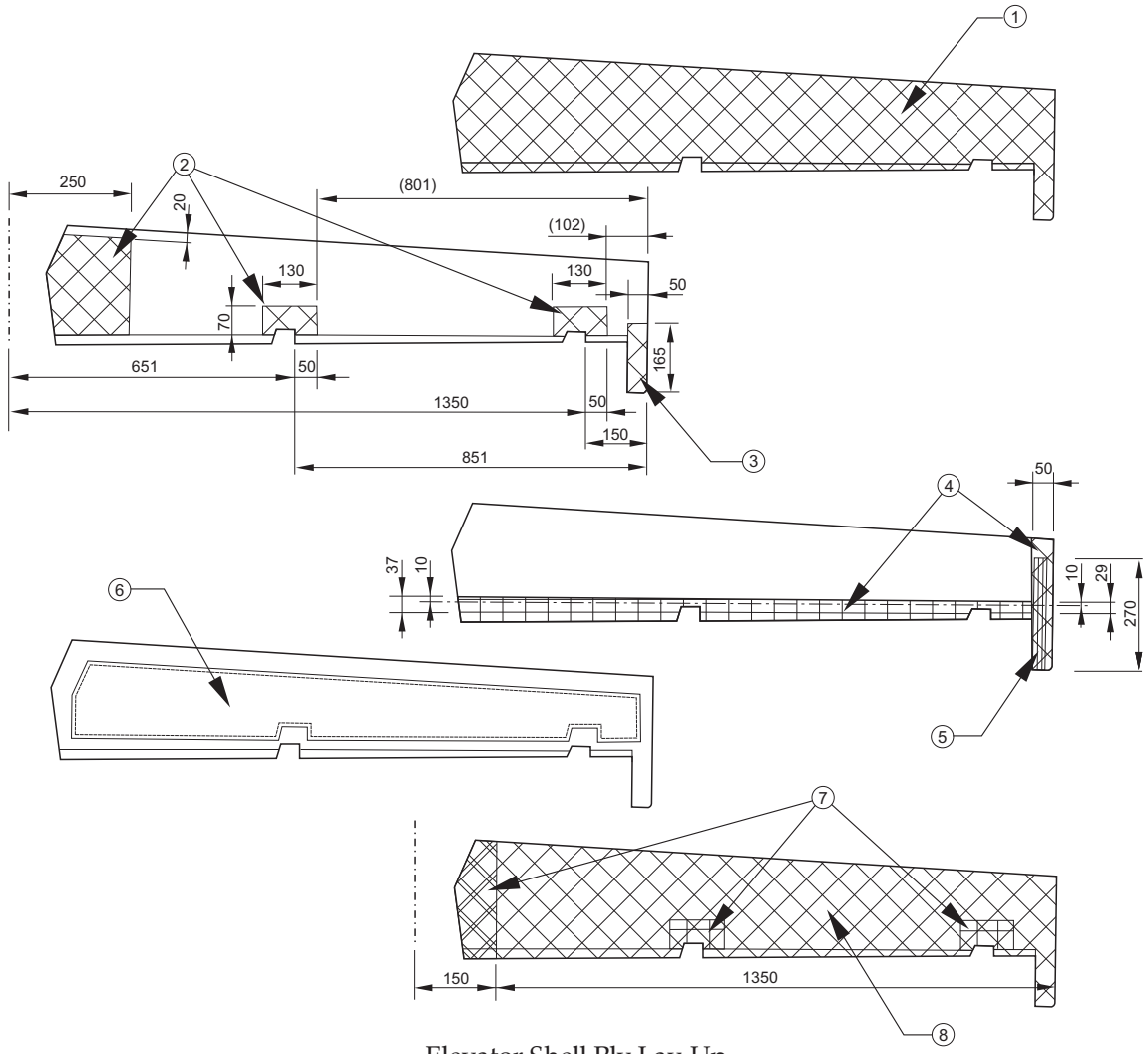


Elevator Shell Ply Lay-Up
Figure 206

| Item No. | Layers | Description | Remarks |
|---|---|---|---|
| 1 | 1 | Interglas 92110 | overall |
| 2 | 1 | CST 240/60 | |
| 3 | 2 | Interglas 92110 | |
| 4 | 1 | Interglas 92110 | |
| 5 | 4 | Interglas 92125 | |
| 6 | 2 | Interglas 92125 | |
| 7 | - | DH60-03 | rigid foam |
| 8 | 1 | Interglas 92110 | |
| 9 | 1 | Interglas 92125 | |
| 10 | 1 | Interglas 92110 | overall |

Ply lay-up for LH / RH rudder shell symmetrical.

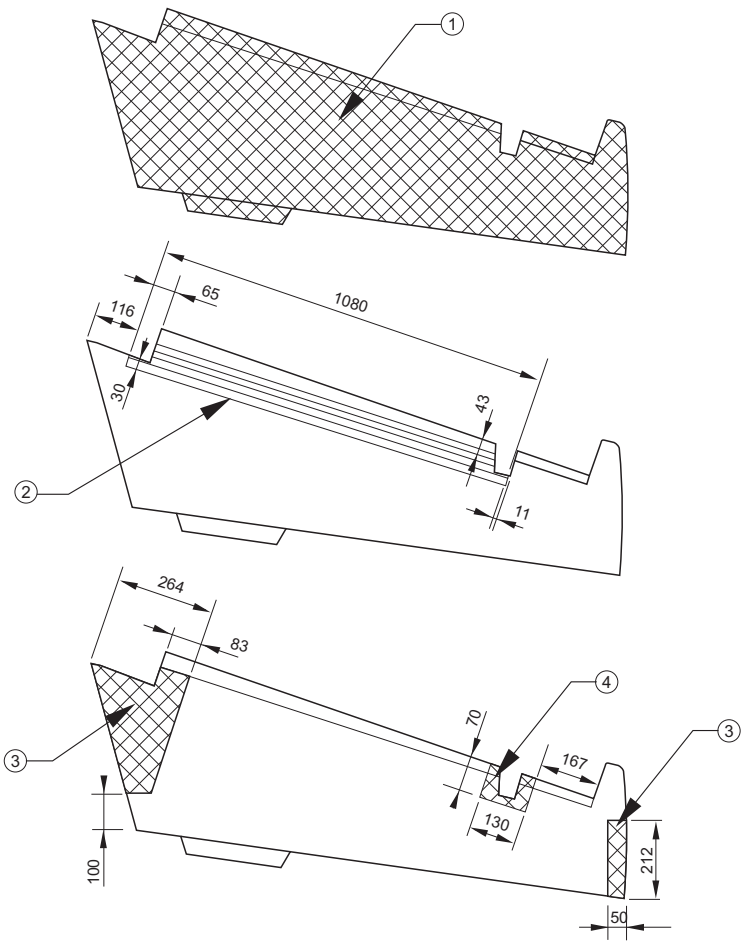


Rudder Shell Ply Lay-Up
Figure 207 (1)

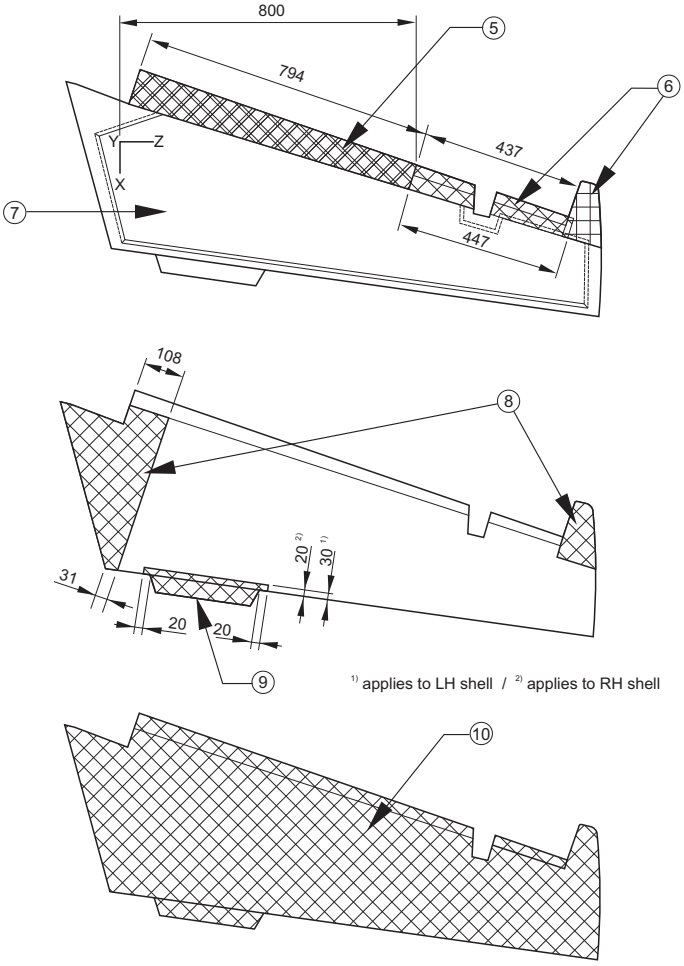


Rudder Shell Ply Lay-Up
Figure 207 (2)

6. Repair of Sandwich Components

A. Material Specifications

| Type | Material | Weave | Weight | Thickness | Scarf |
|---|---|---|---|---|---|
| Interglas 90070 | glass | plain | 80 g/m² | 0,07 mm | 4 mm |
| Interglas 92110 | glass | 2/2 twill | 163 g/m² | 0,14 mm | 8 mm |
| Interglas 92125 | glass | 2/2 twill | 280 g/m² | 0,25 mm | 14 mm |
| Interglas 92140 | glass | 2/2 twill | 390 g/m² | 0,35 mm | 20 mm |
| Interglas 98140 | carbon | plain | 204 g/m² | 0,26 mm | 18 mm |

B. Outer Laminate Repair (surface defects)

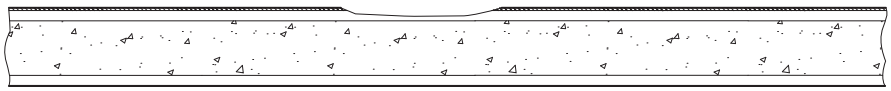

(1) Remove surface finish from damaged area. Carefully examine the area around the damage. Check for disbonding between laminate layers and core material.
(2) Remove damaged/loose laminate by sanding with 80-grit sandpaper.
(3) Scarf the edges of the repair area with a grinding disk or block (refer to “Material Specifications” above for scarf size).

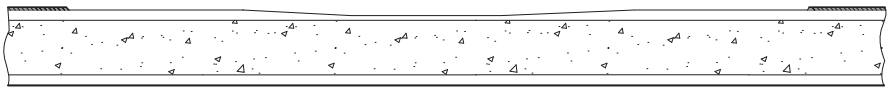

(4) Solvent clean prepared area.
(5) Lay up repair plies according to the existing layer direction (refer to “Material Data Sheet” above). If the layer orientation is not clear please contact AQUILA Aviation GmbH.

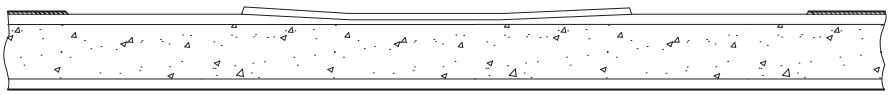

(6) Pre-cure the repair at least 24 hours at 20°C (68°F) to 25°C (77°F).
(7) Post-cure the repair at least 15 hours at 54°C (129°F) to 60°C (140°F).
(8) Sand the repair surface down to contour.
(9) Refenish the repair area as described in “Exterior Finish” below.

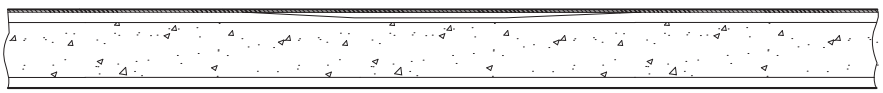

C. Minor Core Damage

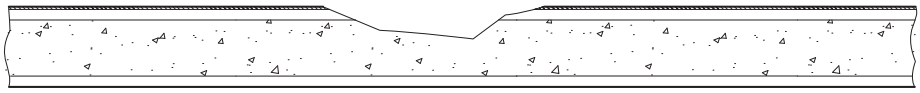

(1) Remove surface finish from damaged area. Carefully examine the area around the damage. Check for disbonding between laminate layers and core material.
(2) Remove damaged/loose laminate by sanding with 80-grit sandpaper.
(3) Scarf the edges of the repair area with a grinding disk or block (refer to “Material Specifications” above for scarf size).
(4) Solvent clean prepared area.
(5) Fill the damaged foam area with resin thickened by microballoons and allow to cure.
(6) Sand the repair area down to contour.

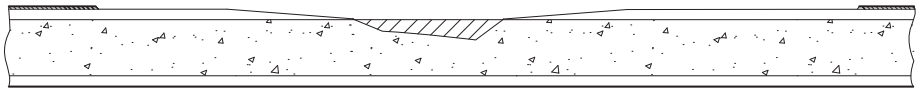

(7) Solvent clean prepared area.
(8) Lay up repair plies according to the existing layer direction (refer to “Material Data Sheet” above). If the layer orientation is not clear please contact AQUILA Aviation GmbH.

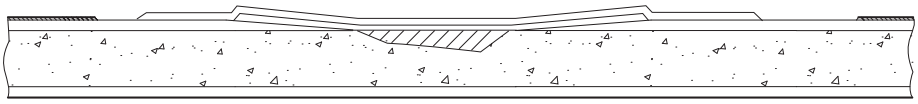

.
(9) Pre-cure the repair at least 24 hours at 20°C (68°F) to 25°C (77°F).
(10) Post-cure the repair at least 15 hours at 54°C (129°F) to 60°C (140°F).
(11) Sand the repair surface down to contour.
(12) Refenish the repair area as described in “Exterior Finish” below.

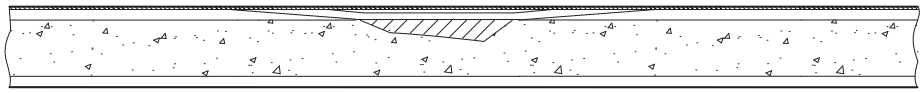

D. Core Replacement

(1) Remove surface finish from damaged area. Carefully examine the area around the damage. Check for disbonding between laminate layers and core material.
(2) Remove damaged/loose laminate and core and carefully trim out to a circular or oval shape. Check edge of damage for separation of core and inner laminate. Check inner laminate for damage and repair first if required.
(3) Scarf the edges of the repair area with a grinding disk or block (refer to "Material Specifications" above for scarf size).

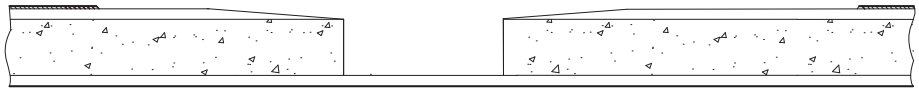

(4) Solvent clean prepared area.
(5) Prepare a replacement core (refer to "Material Data Sheet" above) and fit it snugly in the trimmed shape. Leave a small amount of clearance for resin microballoon mixture.
(6) Bond in replacement core with resin thickened by microballoons and allow to cure.

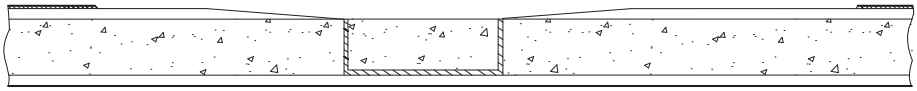

(7) Sand the replacement core down to contour.
(8) Solvent clean prepared area.
(9) Lay up repair plies according to the existing layer direction (refer to "Material Data Sheet" above). If the layer orientation is not clear please contact AQUILA Aviation GmbH.

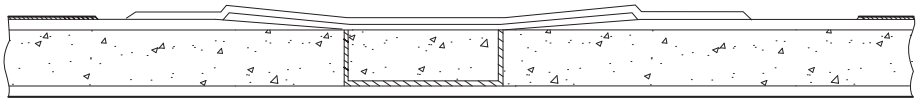

(10) Pre-cure the repair at least 24 hours at 20°C (68°F) to 25°C (77°F).
(11) Post-cure the repair at least 15 hours at 54°C (129°F) to 60°C (140°F).
(12) Sand the repair surface down to contour.
(13) Refenish the repair area as described in "Exterior Finish" below.

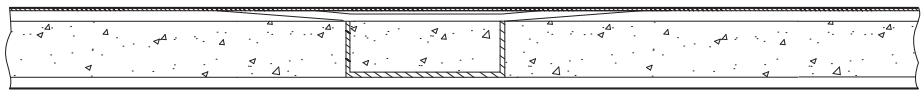

E. Inner Laminate Repair (sandwich penetration, access to inner side)

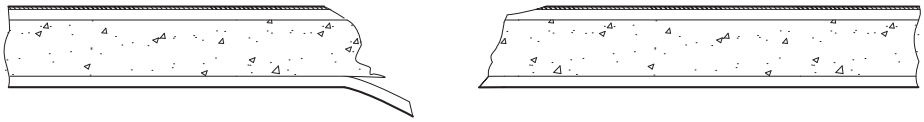

(1) Remove surface finish from damaged area. Carefully examine the area around the damage. Check for disbonding between laminate layers and core material.
(2) Remove damaged/loose laminate and core and carefully trim out to a circular or oval shape. Check edge of damage for separation of core and inner laminate.
(3) Scarf the edges of the repair area with a grinding disk or block (refer to "Material Specifications" above for scarf size).

(4) Solvent clean repair area.
(5) Prepare a temporary backing plate and shim and glue it to inner laminate.
(6) Prepare a replacement core (refer to "Material Data Sheet" above) and fit it snugly in the trimmed shape. Leave a small amount of clearance for resin microballoon mixture.
(7) Bond in replacement core with resin thickened by microballoons and allow to cure.

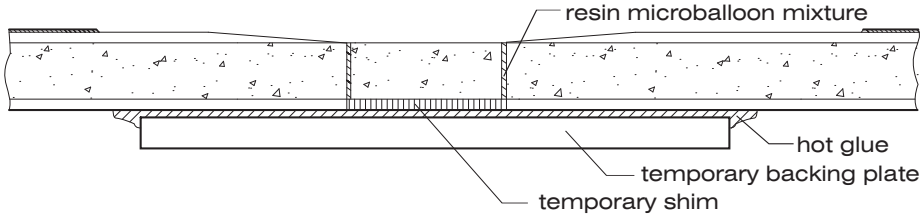


(8) Sand down the replacement core to contour.
(9) Solvent clean repair area.
(10) Lay up outer repair plies according to the existing layer direction (refer to "Material Data Sheet" above). If the layer orientation is not clear please contact AQUILA Aviation GmbH.

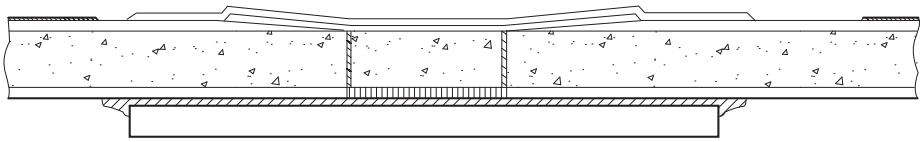

(11) Pre-cure the repair at least 24 hours at 20°C (68°F) to 25°C (77°F).
(12) Post-cure the repair at least 15 hours at 54°C (129°F) to 60°C (140°F).
(13) Sand the repair surface down to contour.
(14) Complete by scarfing and laminating opposite facing in a similar manner.
(15) Refenish the repair area as described in "Exterior Finish" below.

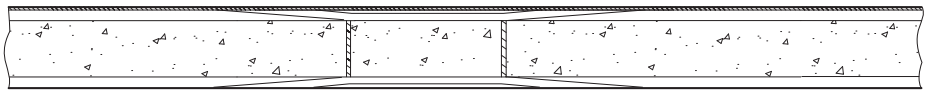

F. Inner Laminate Repair (sandwich penetration, no access to inner side)

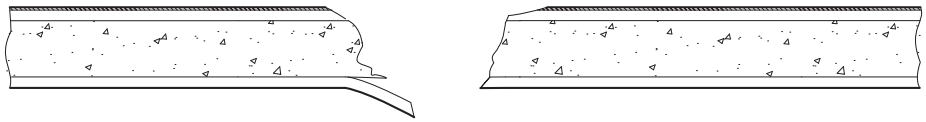

(1) Remove surface finish from damaged area. Carefully examine the area around the damage. Check for disbonding between laminate layers and core material.
(2) Remove damaged/loose outer laminate and core where no secure bond between core and laminate is suspected (circular or oval shaped hole). If necessary enlarge cut out to prepare an overlap in inner laminate of at least 20mm (0.8 inch). Check edge of damage for separation of core and inner laminate.
(3) Scarf the edges of the external repair area with a grinding disk or block (refer to "Material Specifications" above for scarf size).

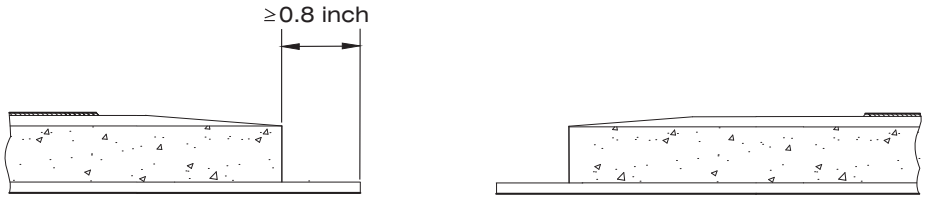


(4) Solvent clean repair area.
(5) Prepare a replacement core (refer to "Material Data Sheet" above) and fit it snugly in the trimmed shape. Leave a small amount of clearance for resin microballoon mixture.
(6) Prepare the foam core for inserting in the repair:
(a) Apply a thin coat of resin to the foam core.
(b) Apply a coat of resin thickened with microballoons to the foam core.
(c) Laminate the inner layers onto the inner surface of the foam core. Make sure that layer orientation is correct (refer to "Material Data Sheet" above).
(7) Apply a thin coat of resin to the repair area.
(8) Put the foam core and inner laminate into position in the repair.

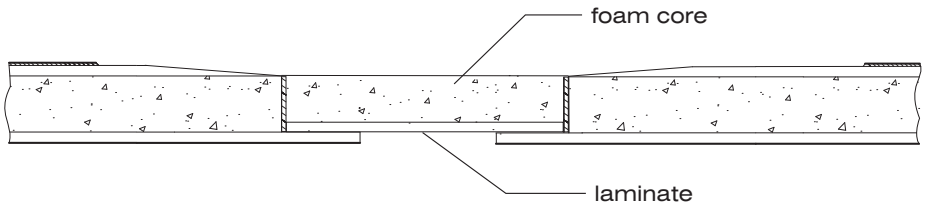


(9) Pre-cure the repair at least 24 hours at 20°C (68°F) to 25°C (77°F).
(10) Sand down the replacement core to contour.
(11) Solvent clean repair area.
(12) Apply a coat of resin thickened by microballoons to the foam core.
(13) Apply a thin coat of resin to the scarfed edges of the repair area.
(14) Lay up outer repair plies according to the existing layer direction (refer to "Material Data Sheet" above). If the layer orientation is not clear please contact AQUILA Aviation GmbH.

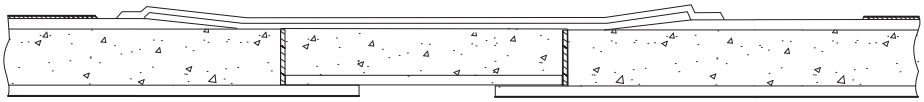

(15) Pre-cure the repair at least 24 hours at 20°C (68°F) to 25°C (77°F).
(16) Post-cure the repair at least 15 hours at 54°C (129°F) to 60°C (140°F).
(17) Sand the repair surface down to contour.
(18) Refenish the repair area as described in "Exterior Finish" below.

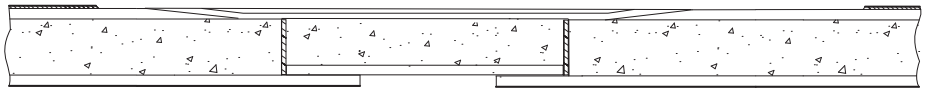

7. Repair of Monolithic Components

A. Monolithic Component Repair

(1) Remove surface finish from damaged area. Carefully examine the area around the damage. Check for disbonding between laminate layers.
(2) Scarf the edges of the repair area with a grinding disk or block (refer to "Material Specifications" above for scarf size).

(3) Solvent clean prepared area.
(4) Lay up repair plies according to the existing layer direction (refer to "Material Data Sheet" above). If the layer orientation is not clear please contact AQUILA Aviation GmbH.

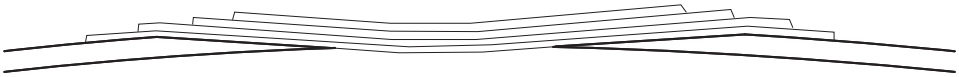

(5) Pre-cure the repair at least 24 hours at 20°C (68°F) to 25°C (77°F).
(6) Post-cure the repair at least 15 hours at 54°C (129°F) to 60°C (140°F).
(7) Sand the repair surface down to contour.
(8) Refenish the repair area as described in "Exterior Finish" below.

8. Exterior Finish

Prior painting over a repair, inspect the repair to ensure that it has hardened completely and has been properly contoured.

CAUTION: MASK OFF SURFACE AROUND REPAIR AREA THAT DOES NOT REQUIRE FILLING OR PAINT, PAY SPECIAL ATTENTION TO STATIC PORTS, ANTENNAS AND DRAIN HOLES.

A. Filler

NOTE: Filler should be used for repairing cosmetic blemishes and minor surface defects.

(1) Sand the application area with 240 to 280-grit dry sandpaper.
(2) Clean the application area with a suitable solvent.
(3) Mix filler thoroughly in accordance with the manufacturer's instructions.
(4) Apply filler with a clean applicator according to the manufacturer's instructions.
(5) When the filler has hardened, lightly sand the repair area with 280-grit sandpaper and then switch for final sanding to 360-grit sandpaper to remove all sanding scratches.

B. Paint
(1) Prepare the surface for paint by applying filler as required.
(2) Clean the application area with a suitable solvent.
(3) Visually inspect prepared surface for imperfections prior to painting.
(4) Mix and apply paint as recommended by the manufacturer.

# CHAPTER 52

# DOORS

## TABLE OF CONTENTS


| Title | Chapter Section Subject | Page |
|---|---|---|
| DOORS - GENERAL | 52-00-00 | 1 |
| Introduction | 52-00-00 | 1 |
| General Description | 52-00-00 | 1 |
| CANOPY - MAINTENANCE | 52-10-00 | 201 |
| General | 52-10-00 | 201 |
| Canopy Removal/Installation | 52-10-00 | 201 |
| Canopy Latching Mechanism Maintenance | 52-10-00 | 201 |
| BAGGAGE DOOR - MAINTENANCE | 52-30-00 | 201 |
| General | 52-30-00 | 201 |
| Baggage Door Removal/Installation | 52-30-00 | 201 |

# DOORS - GENERAL

1. Introduction

   A. This chapter describes the canopy and the baggage door. It includes items such as structure, latching mechanism and maintenance instructions.

2. General Description

   A. The canopy consists of a composite frame and a large one-piece acrylic glass window which are bonded together. The window has two direct vision panels that can be opened in flight.
   The canopy moves up and forward to open. A latching mechanism holds the canopy closed by two latching pins. The canopy is locked from the outside with a key lock.

   B. The baggage door is located on the left side of the fuselage, just aft of the wing. It is made of composite materials. The door allows easy access to the baggage compartment. The baggage door is hinged on the forward edge and latched on the rear edge. The door is locked from the outside with a key lock.

## CANOPY - MAINTENANCE

1. General

A. The canopy consists of a frame fabricated from carbon fiber laminate and rovings, and a large one-piece acrylic glass window which are bonded together. The window has two direct-vision panels, one on each side. The direct-vision panels can be opened in flight.
The canopy is mounted to a tubular steel frame at the front. The frame attaches to two hinges on the rear face of the firewall. The canopy moves up and forward to open. A gas strut will help raise the canopy to the full up position and holds the canopy open.

B. The canopy latching mechanism is shown in figure 201. It incorporates two latching pins, one on either side, and an inner and outer door handle in the left canopy frame. Rotating the door handle either from inside or outside the aircraft, either inserts or retracts the two latching pins into or out of the receivers in the fuselage. The right pin operates synchronously via a push-pull cable that runs inside the canopy frame. Roll pins hold the latch in the fully latched position.

2. Canopy Removal/Installation

A. Remove Canopy
(1) Open canopy.
(2) Remove flexible air hose from canopy frame.
(3) While helpers support the canopy, remove four hex bolts securing the canopy to the hinge frame and lift the canopy clear of the aircraft.

B. Install Canopy
(1) Lift canopy into position on the aircraft.
(2) Install washers and hex bolts securing the canopy to the hinge frame.
(3) Install flexible air hose to canopy frame.

3. Canopy Latching Mechanism Maintenance (Ref. Fig. 201)

A. Access Canopy Latching Mechanism
To gain access to the central portion of the canopy latching mechanism, remove screws securing the covering to canopy frame and remove covering.

CAUTION: THE DRIVESHAFT OF THE CANOPY LOCKING MECHANISM MAY FALL DOWN WHEN REMOVING THE ATTACHMENT SCREW.

B. Adjust Latching Pin
(1) Remove screws securing the covering to the canopy and remove covering.
(2) Remove the bolt, securing appropriate rod end to the actuation lever.
(3) Turn the rod end in the corresponding direction.
(4) Reconnect rod end to the actuation lever using bolt, washer and nut.
(5) Check proper functioning of the canopy latching mechanism. Repeat the above procedures as required.
(6) Install the covering to canopy frame using screws.

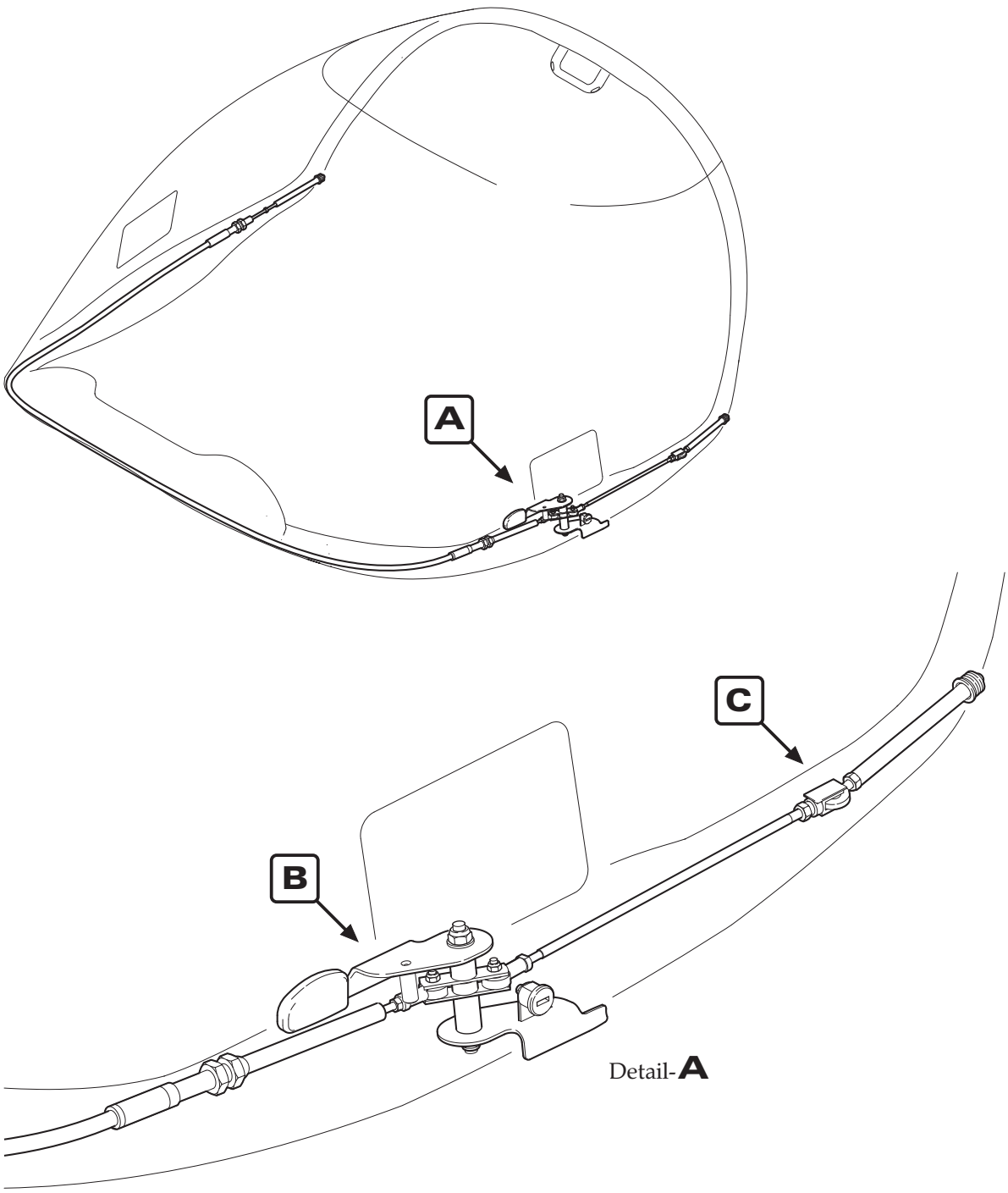


Canopy Latching Mechanism
Figure 201 (1)

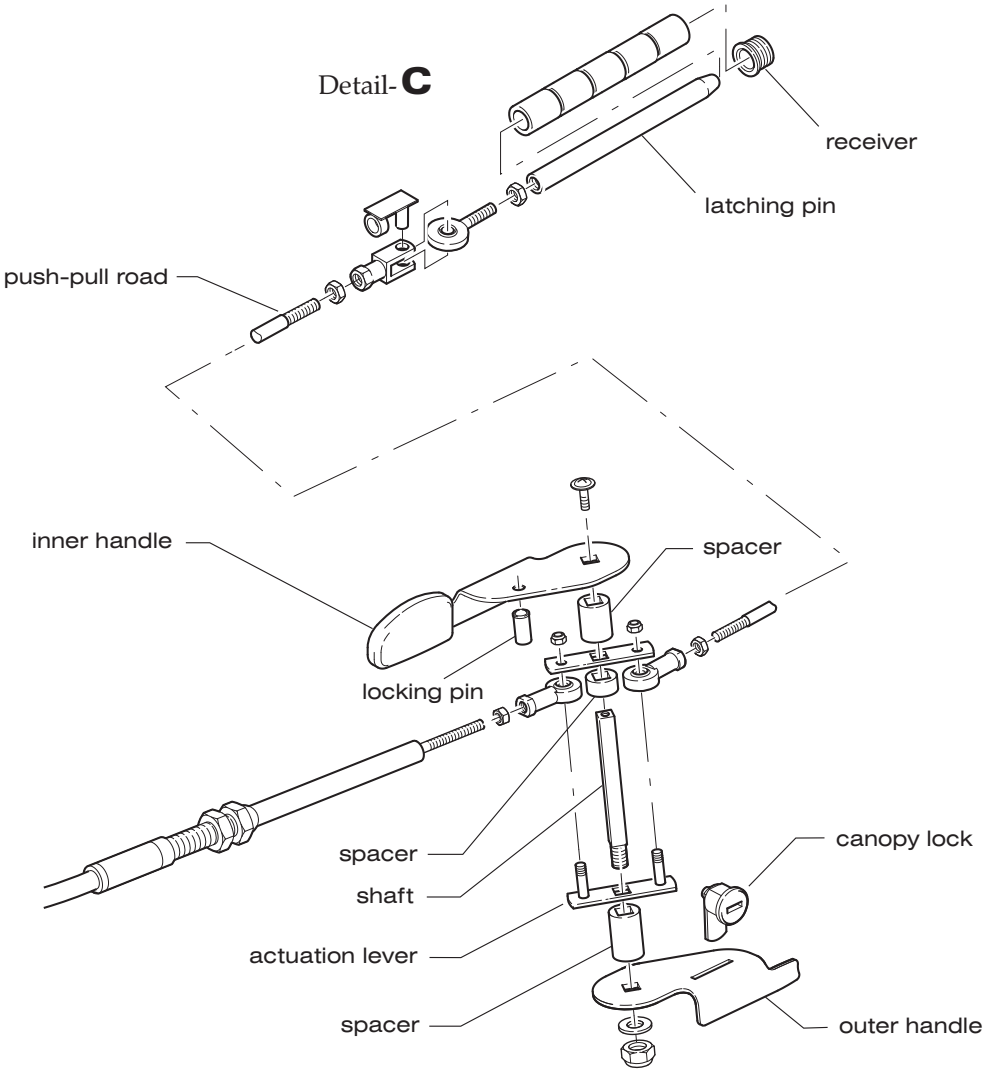


Canopy Latching Mechanism
Figure 201 (2)

C. Install/Adjust Locking Pin
(1) Remove screws securing the covering to the canopy and remove covering.
(2) Clean thread of hole and locking pin with ethyl alcohol.
(3) Thoroughly apply epoxy resin to the thread tapped inside the GRP plate of the cover.
(4) Screw locking pin into cover, starting from outer side in downward direction. The locking pins spring loaded thrust pad has to face in upward direction. As initial setting adjust the locking pin so that the pin potrudes the surface of the cover by 2 mm.
(5) Reinstall covering to canopy frame using screws.
(6) Functional test of the canopy locking and fine adjustment of the locking pin:
(a) If canopy locking latch is excessively tight and rough-running, the locking pin has to be turned slightly downward.
(b) If canopy locking latch is too smooth-running, the locking pin has to be turned slightly upward.
(7) Cure bonded locking pin at approx. 20°C for at least 24 hours.
(8) Do a final functional test of the canopy locking mechanism.

NOTE: The bonded locking pin can be loosened with a gripper after removing the cover.

If the complete locking mechanism is too smooth-running, the inner friction of the locking mechanism can be increased by an additional tightening of the self-locking nut. If necessary, an additional Washer 1800125_8,4 (DIN 125, zinc-plated) can be installed between the washer of the self-locking nut and the outer canopy locking latch.

## BAGGAGE DOOR - MAINTENANCE

1. General

   A. The baggage door is made of glass fiber laminate. It is hinged on the forward edge via two GFRP hinge arms and latched on the rear edge. The door is locked from the outside with a key lock.

2. Baggage Door Removal/Installation

   A. Remove Baggage Door
      (1) Open baggage door.
      (2) While supporting the baggage door, remove the cotter pins, bolts and washers securing the baggage door hinge arms to the fuselage.
      (3) Remove baggage door.

   B. Install Baggage Door
      (1) Lift baggage door into position on the aircraft.
      (2) Install bolts, washers and cotter pins securing the baggage door hinge arms to the fuselage.
      (3) Perform functional check of the baggage door latching mechanism.

# CHAPTER 53

# FUSELAGE

## TABLE OF CONTENTS


| Title | Chapter Section Subject | Page |
|---|---|---|
| FUSELAGE - GENERAL | 53-00-00 | 1 |
| Introduction | 53-00-00 | 1 |
| General Description | 53-00-00 | 1 |
| FUSELAGE MAIN FRAME - DESCRIPTION | 53-10-00 | 1 |
| Description and Operation | 53-10-00 | 1 |
| FUSELAGE MAIN FRAME - MAINTENANCE | 53-10-00 | 201 |
| General | 53-10-00 | 201 |
| AUXILIARY STRUCTURE - DESCRIPTION | 53-20-00 | 1 |
| Description and Operation | 53-20-00 | 1 |

# FUSELAGE - GENERAL

1. Introduction

   A. This chapter provides a description of the general fuselage structure. For systems and components installed in the fuselage structure, refer to the respective chapters in this manual.

2. General Description

   A. The fuselage is a semi-monocoque structure made primarily of composite materials. The fuselage structure consists of two halves made from fiberglass laminate bonded along a centerline lap-joint. The vertical stabilizer is an integral part of the fuselage structure. Bulkheads and frames give the fuselage strength and stiffness.

   The fuselage shells are primarily solid laminate (no foam) constructions. Only the area of the vertical stabilizer is made of fiberglass with a foam core. The fuselage skin is reinforced by four carbon-fiber stringers, arranged lengthwise through the entire fuselage.

## FUSELAGE MAIN FRAME - DESCRIPTION

1. Description and Operation

This section describes those structural components which make up the main frame including firewall, bulkheads and ring frames.

A. Firewall
The firewall separates the engine compartment from the rest of the fuselage and supports various aircraft components on both the forward and aft sides. The firewall, constructed of a GFRP/CFRP composite sandwich, includes metal fittings for supporting the engine mount, and incorporates several hardpoints for the support of various engine and system components. The forward side has a fire protection lining that consists of an especially fire-resistant ceramic fleece and a stainless steel sheet.

B. Side Force Bulkhead
A sandwich-type bulkhead bonded into the fuselage belly in front of the seat bulkhead carries the side forces. It is a rigid GFRP molding.

C. Seat Bulkhead
The seat bulkhead is a rigid GFRP molding. It has layers of carbon cloth on the top and bottom faces. The bulkhead is bonded into the fuselage belly. To four hardpoints in the bulkhead structure are provided for the attachment of the main landing gear brackets.

D. Landing Gear Bulkhead
The landing gear bulkhead has a similar structure as the seat bulkhead. It carries the landing gear loads.

E. Roll-Over Bar
The landing gear bulkhead, which, together with the seat bulkhead, carries the main landing gear struts, is complemented upwards by a compact CFRP/GFRP roll-over molding.

F. Baggage Compartment Bulkhead
The baggage compartment bulkhead is a sandwich construction and made from GFRP. It forms the rear of the baggage compartment. The bulkhead bonds to the inner fuselage shells. The passenger seat shoulder harness is attached to the bulkhead.

G. Ring Frames
The ring frames give the fuselage aft of the cockpit strength and stiffness. They are of rigid GFRP molding and bonded into the fuselage shells. They have holes for the rudder control cables and provide support for the elevator pushrod bearings.

H. Vertical Stabilizer Main Spar
The vertical stabilizer main spar is a rigid GFRP molding which bonds to the fuselage shell. It also bonds to the vertical stabilizer front and rear rib.

I. Vertical Stabilizer Rear Web
The vertical stabilizer rear web is a rigid GFRP molding, which bonds to the fuselage shell and to the vertical stabilizer rear web. The rear web assembly contains the top rudder mounting.

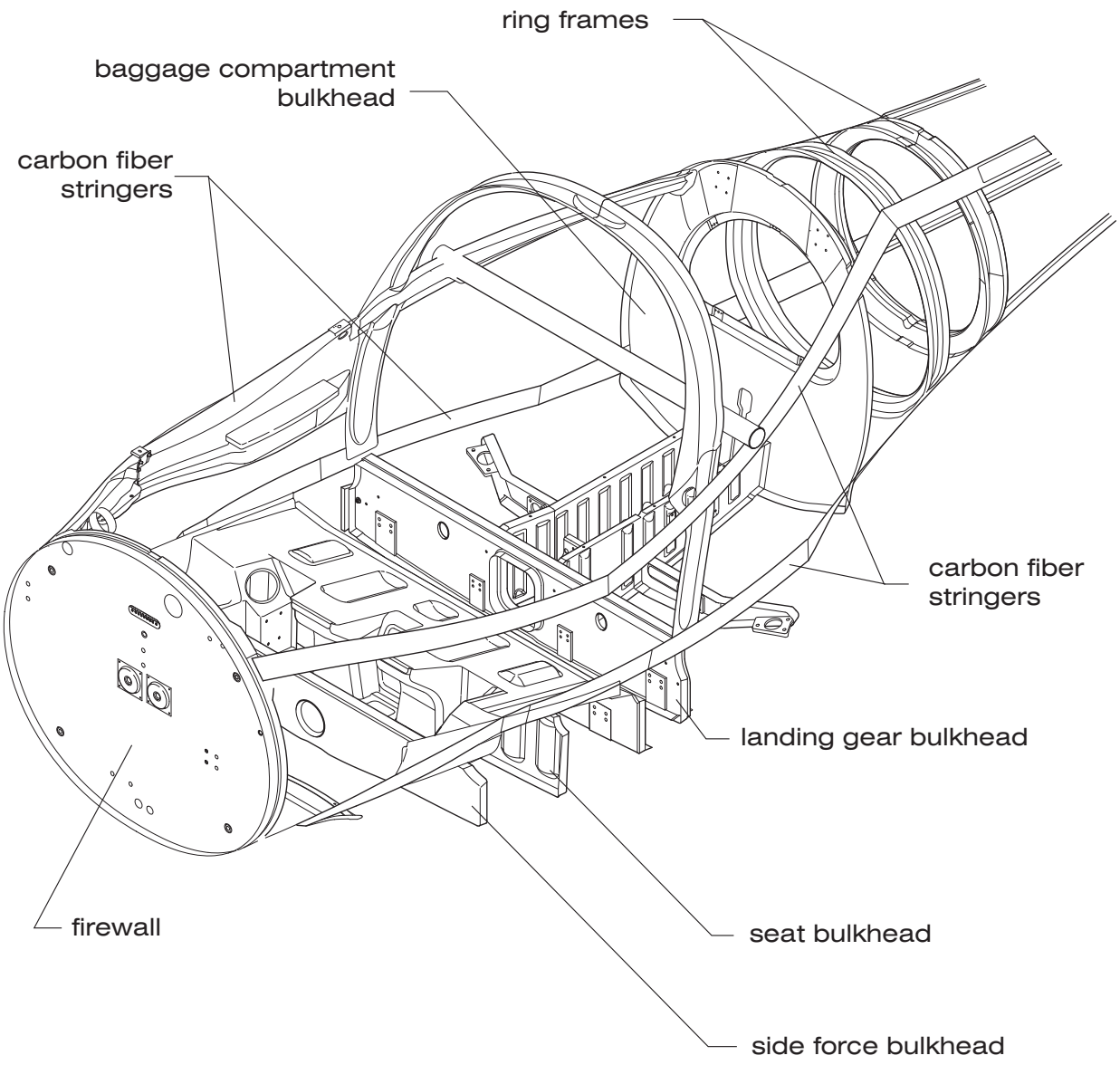


Fuselage Structure
Figure 201 (1)

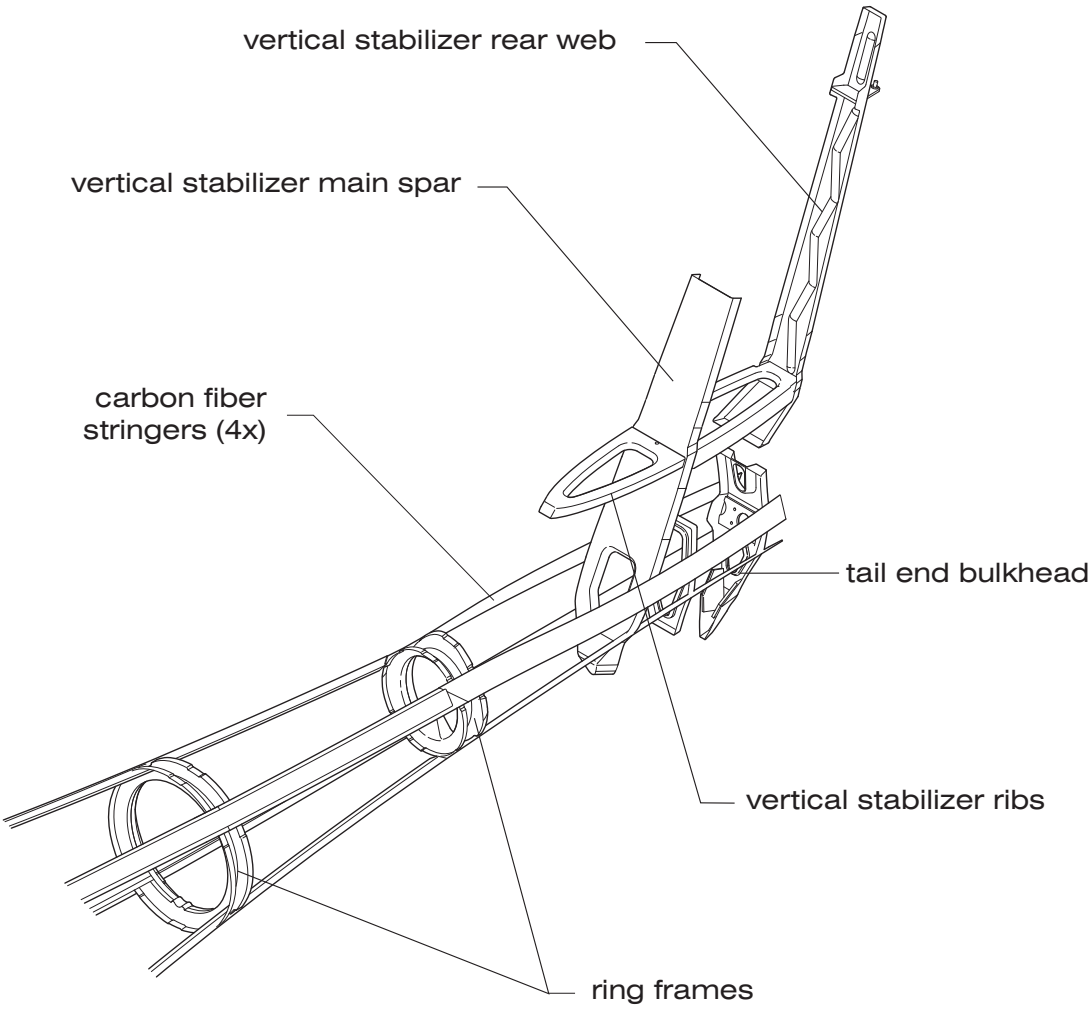


Fuselage Structure
Figure 201 (2)

J. Vertical Stabilizer Ribs
The vertical stabilizer front and rear ribs are of rigid GFRP molding and bonded to the fuselage shells and to the vertical stabilizer main spar. The rear rib also bonds to the rear web.

K. Tail End Bulkhead
The tail end bulkhead is a rigid GFRP molding that is bonded to the fuselage shells. The bulkhead contains a reinforced area to which the lower rudder attachment bracket is bolted.

## FUSELAGE MAIN FRAME - MAINTENANCE

1. General

A. Maintenance of the fuselage is limited to the repair of the fuselage skin. Most areas of the fuselage skin are field-repairable, some areas are difficult to repair or require special procedures to ensure the structural integrity of the repair. Refer to chapter 51 for standard repair procedures and for repair data for the fuselage shells.

B. If the damage area is inside the fuselage AQUILA Aviation GmbH must be contacted prior to beginning repair work.

C. Repairs must be completed by competent technicians who are trained in composite repair.

## AUXILIARY STRUCTURE - DESCRIPTION

1. Description and Operation

This section describes those structural components which make up the auxiliary structure including fuselage floor structure, center console, access panels and entry step.

A. Fuselage Floor Structure
The floor structure of the aircraft consists of a forward floor, a left and right baggage compartment floor, a left and right control stick cover and a left, right and center cover of the well of the landing gear. Forward floor and baggage compartment floors are foam core composite laminate panels designed to support flight and user loads. The covers of the well of the landing gear are composite laminate panels. Refer to 25-12-00 for an exploded view of the cabin interior.

B. Center Console
The center console consists of a left, right, upper forward, lower forward and aft composite laminate part and metal covers. Refer to 25-12-00 for an exploded view of the cabin interior.

C. Entry Step
The entry step is made of 28x1,5 mm [1.1x0.06 in.] steel tubes welded to a 3 mm [0.12 in.] steel flange. It is secured to the fuselage by 3 screws.

# CHAPTER 55

# STABILIZERS

## TABLE OF CONTENTS


| Title | Chapter Section Subject | Page |
|---|---|---|
| STABILIZERS - GENERAL | 55-00-00 | 1 |
| Introduction | 55-00-00 | 1 |
| General Description | 55-00-00 | 1 |
| HORIZONTAL STABILIZER - MAINTENANCE PRACTICES | 55-10-00 | 201 |
| General | 55-10-00 | 201 |
| ELEVATOR - MAINTENANCE PRACTICES | 55-20-00 | 201 |
| General | 55-20-00 | 201 |
| Elevator Removal/Installation | 55-20-00 | 201 |
| Adjustment - Elevator Balancing | 55-20-00 | 201 |
| VERTICAL STABILIZER - MAINTENANCE PRACTICES | 55-30-00 | 201 |
| General | 55-30-00 | 201 |
| RUDDER - MAINTENANCE PRACTICES | 55-40-00 | 201 |
| General | 55-40-00 | 201 |
| Rudder Removal/Installation | 55-40-00 | 201 |
| Adjustment - Rudder Balancing | 55-40-00 | 201 |

## STABILIZERS - GENERAL

1. Introduction

   A. This chapter describes the horizontal and vertical stabilizers as well as the structure of the elevator and rudder. Maintenance information is provided.

2. General Description

   A. The AQUILA AT01 empennage consists of a horizontal stabilizer, a two-piece elevator, a vertical fin and a rudder. All of the structure components are made from composite materials.
   The horizontal and vertical stabilizers are of fully cantilever, semi-monocoque design consisting of spars, ribs, and skin. Skin is bonded to the supporting structure. The vertical stabilizer is composite structure integral to the main fuselage shell.

   The aerodynamically and mass balanced rudder is connected to the vertical stabilizer by two hinged brackets. The lower one has a yoke that drives the rudder by means of control cables.

   The aerodynamically and mass balanced elevator is attached to the horizontal stabilizer rear shear web at five hinge points. A torque tube connects the elevator halves.

## HORIZONTAL STABILIZER MAINTENANCE PRACTICES

1. General

A. The horizontal stabilizer is of fully cantilever, semi-monocoque design. The structure, made from composite materials, consists of a front spar, a rear shear web, root ribs, and top and bottom shells. The shells have a GFRP skin with a rigid foam core.
The horizontal stabilizer is molded to the fuselage.

The rear shear web integrates hinge brackets for elevator attachment.

B. Because the horizontal stabilizer is made from composite materials and is molded to the fuselage, no servicing is required.

## ELEVATOR - MAINTENANCE PRACTICES

1. General

A. The two-piece elevator is made from composite materials. Each half has a top and a bottom shell which are bonded together. The shells have a sandwich structure with a rigid foam core. Between the shells, at the outer end a horn rib, in the front area two hinge brackets, and at the inboard end rib are bonded. All structure components are GFRP moldings.
A mass balance weight is fastened to the outboard horn rib. To the inboard rib a welded, two-piece torque tube assembly is bolted. By means of the torque tube assembly the elevator halves are mounted together.

B. This section provides removal and installation instructions for the elevator assembly and procedures for elevator balancing.

2. Elevator Removal/Installation

A. Remove Elevator
(1) Remove rudder (Refer to 55-40-00).
(2) Remove bellcrank/elevator mounting bolts, self-locking nuts, washers and spacers (3 places).
(3) Slide the elevator off of the horizontal stabilizer hinge pins by sliding the elevator away from the fuselage.

B. Install Elevator
(1) Install the elevator onto the hinge pins.
(2) Install bellcrank/elevator mounting bolts.
(a) Position spacer between left and right torque tube assemblies.
(b) Insert bolt from left side, and install washer and new self-locking nut.
(c) Install hinge bolt at center hinge from left. Ensure the spacers are in position. Install washer and new self-locking nut.
(d) Reconnect elevator push-pull rod using hardware.
(3) Install rudder (Refer to 55-40-00).
(4) Check proper aileron control system operation (Refer to 27-30-00).

3. Adjustment - Elevator Balancing

Weighing and determination of control surface moment should be performed after repairs or painting. The residual moment of the control surface and its maximum permissible total weight should be within the ranges as specified in 06-10-00.

To weigh a control surface, it must be removed from aircraft. Weighing can be accomplished using any convenient method.

WARNING: CORRECT CONTROL SURFACE BALANCE IS IMPORTANT FOR THE FLIGHT SAFETY. OUT OF BALANCE CONTROL SURFACES CAN FLUTTER AND CAUSE STRUCTURAL FAILURE.

A. Elevator Balancing

NOTE: Calculate the static control surface moment as follows: M = F x r [Nm]

(1) Disconnect elevator assembly from elevator push-pull rod (Ref. to 27-30-00).
(2) Weigh by means of a conventional spring balance at the given weighing point (Refer to figure 201).
   (a) Attach spring balance at weighing point. The initial position of the elevator for each measurement should be horizontally with the chord line.

   NOTE: The chord line is defined as the line extending from the trailing edge through the hinge line.

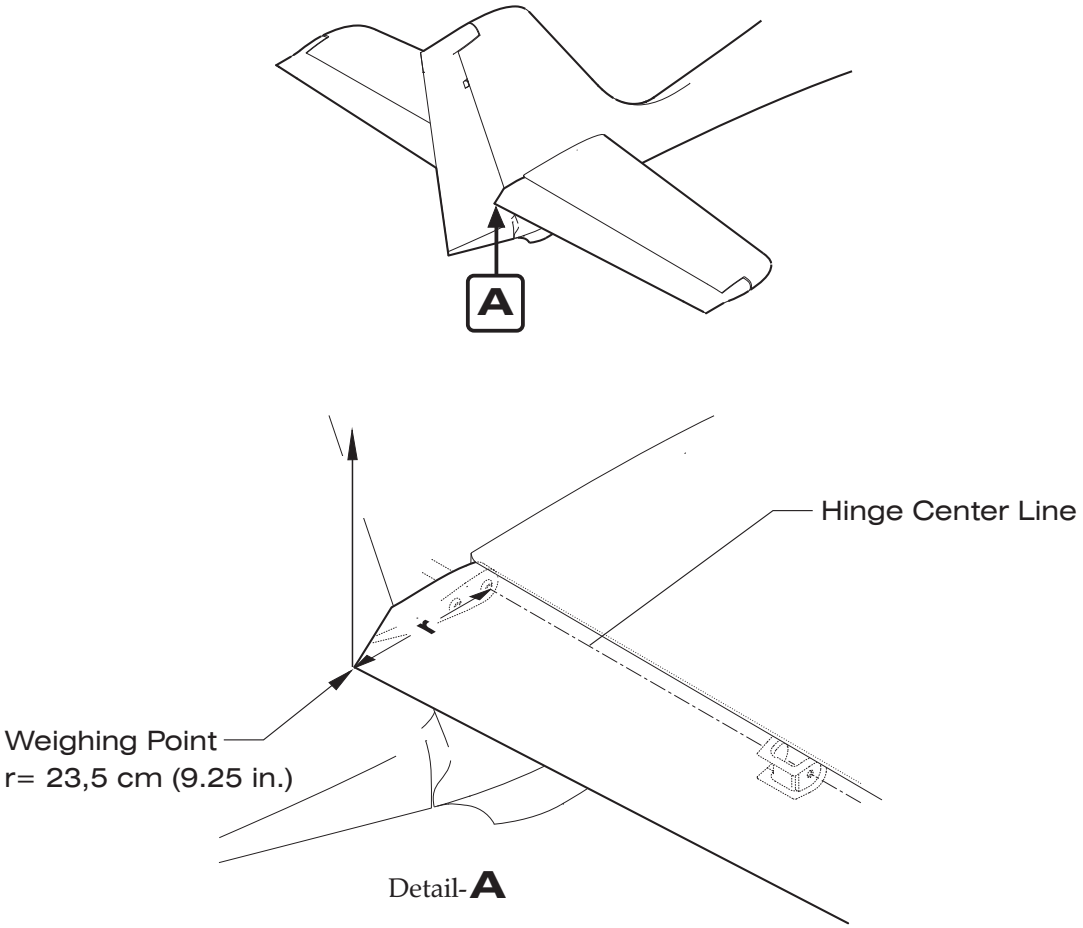


Elevator Balancing
Figure 201

(b) Raise the spring balance slowly until the control surface begins to move. Note the reading and the direction of the movement (i.e. 11.2 N up).

(c) Lower the spring balance slowly until the control surface begins to move down. Note the reading and the direction of the movement to (i.e. 11.8 N down).

(3) Calculate moments as described above. Both results must be within the permitted limits.

## VERTICAL STABILIZER - MAINTENANCE PRACTICES

1. General

A. The vertical stabilizer is integral of the fuselage structure and is made from composite laminate materials. No servicing is required.

B. For more information on fuselage structure, refer to 53-10-00.

## RUDDER - MAINTENANCE PRACTICES

1. General

A. The rudder is made from composite materials. The assembly consists primarily of left and right shells which are bonded together. The shells have a sandwich structure with a rigid foam core. Between the shells, at the rudder tip a horn rib, near the top in the front area a hinge rib, and at the base a hinge rib are bonded. All structure components are GFRP moldings.

A mass balance weight is fastened to the horn rib. To the lower hinge rib the rudder bellcrank is bolted.

B. This section provides removal and installation instructions for the rudder and procedure for rudder balancing.

2. Rudder Removal/Installation

A. Remove Rudder
(1) Relieve tension of rudder control cables by loosening carry through cable turnbuckles and disconnect from the rudder bellcrank.
(2) Remove castellated nut from hinge bolt at the base of rudder.
(3) Slide the rudder off of the second hinge pin by lifting the rudder, and remove from vertical stabilizer.

B. Install Rudder
(1) Place the rudder into position and install washer and castellated nut. Secure bolt with cotter pin.

NOTE: Make sure a washer remains on the hinge bolt before installing the rudder. Installing rudder without that washer in place can cause the rudder to bind.

(2) Reconnect control cables to the rudder bellcrank.
(3) Adjust cable tension (Refer to 27-20-00).
(4) Check proper rudder control function and adjustment and rig where necessary (Refer to 27-20-00).

3. Adjustment - Rudder Balancing

Weighing and determination of control surface moment should be performed after repairs or painting. The residual moment of the control surface and its maximum permissible total weight should be within the ranges as specified in 06-10-00.

To weigh a control surface, it must be removed from aircraft. Weighing can be accomplished using any convenient method.

WARNING: CORRECT CONTROL SURFACE BALANCE IS IMPORTANT FOR THE FLIGHT SAFETY. OUT OF BALANCE CONTROL SURFACES CAN FLUTTER AND CAUSE STRUCTURAL FAILURE.

A Rudder Balancing

NOTE: Calculate the static control surface moment as follows: M = F x r [Nm]

(1) Remove rudder from aircraft (Ref. to 55-40-00).
(2) Use any suitable method to support the rudder horizontally at the pivot axis so it is able to rotate freely around the pivot axis.
(3) Weigh by means of a conventional spring balance at the given weighing point (Refer to figure 201).
   (a) Attach spring balance at weighing point. The initial position of the elevator assembly for each measurement should be horizontally with the chord line.

      NOTE: The chord line is defined as the line extending from the trailing edge through the hinge line.

   (b) Raise the spring balance slowly until the control surface begins to move. Note the reading and the direction of the movement (i.e. 11.2 N up).
   (c) Lower the spring balance slowly until the control surface begins to move down. Note the reading and the direction of the movement to (i.e. 11.8 N down).
(3) Calculate moments as described above. Both results must be within the permitted limits.

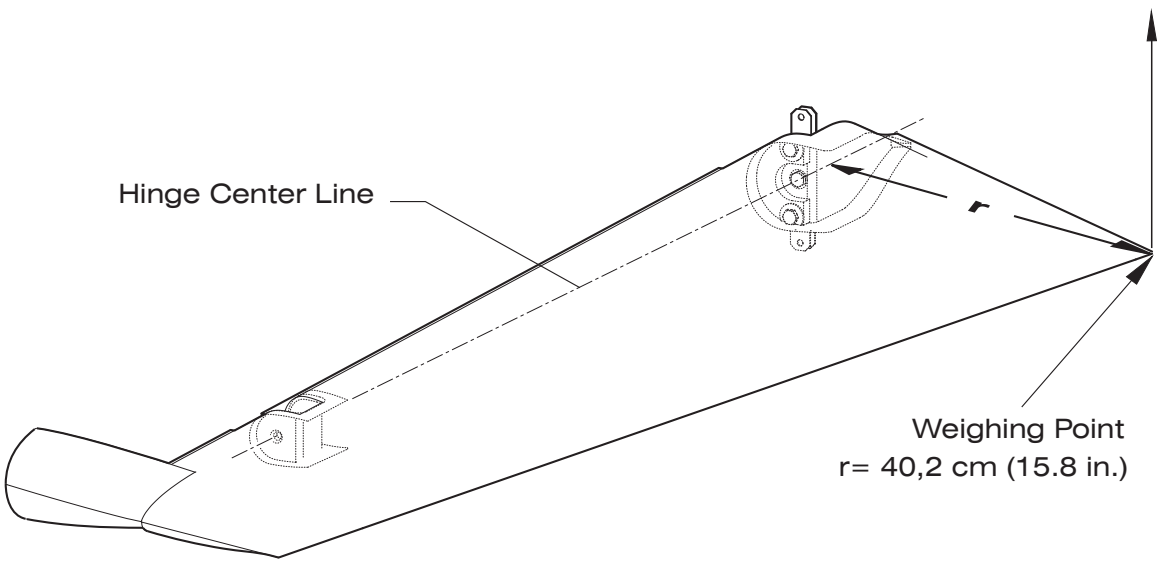


Rudder Balancing
Figure 201

# CHAPTER 56

# WINDOWS

## TABLE OF CONTENTS


| Title | Chapter Section Subject | Page |
|---|---|---|
| WINDOWS - GENERAL | 56-00-00 | 1 |
| Introduction | 56-00-00 | 1 |
| General Description | 56-00-00 | 1 |
| FLIGHT COMPARTMENT WINDOWS - MAINTENANCE | 56-10-00 | 201 |
| General | 56-10-00 | 201 |
| Tools, Equipment and Materials | 56-10-00 | 201 |
| Window Repair | 56-10-00 | 201 |

# WINDOWS - GENERAL

1. Introduction

   A. This chapter describes the acrylic glass windows of the canopy and the fuselage.

   B. Refer to 52-10-00 for information on the canopy structure.

   C. Refer to 12-23-00 for information on cleaning and care of acrylic glass windows.

2. General Description

   A. The aircraft has two windows. The one-piece canopy window covers the cockpit and is also the windscreen. The window has two direct-vision panels, one on each side, which can be opened in flight. The second window covers the rear section of the cabin.
   Both windows are molded acrylic glass (plexiglass). A high-performance elastic adhesive bonds each window to the structure.

## FLIGHT COMPARTMENT WINDOWS - MAINTENANCE

1. General

A. This section describes the repair of damaged acrylic glass windows.

B. A properly carried out repair is essential to preserve the optical properties of acrylic glass windows. Personnel must be familiar with repair practices prior to attempting acrylic glass repairs on the aircraft.

CAUTION: DO NOT USE ANY ORGANIC SOLVENTS SUCH AS THINNER, FUEL OR ALCOHOL ON ACRYLIC GLASS!

2. Tools, Equipment and Material

| | Quantity | Equipment | Parts No. | Manufacturer |
|---|---|---|---|---|
| 3.C. | 1 | small high-speed rotary grinder | - | commercially available |
| 3.C. | as required | filler<br>or<br>or | Acrifix 192<br>Tensol cement No. 70<br>Agovit 1900 | commercially available |
| 3.C. | as required | masking tape | - | commercially available |
| 3.C. | as required | plastic adhesive tape | - | commercially available |
| 3.C. | 1 | cold ultra-violet light source (only for Acrifix 192) | - | commercially available |
| 3.C. | as required | wet abrasive paper | Micro Mesh 3200<br>Micro Mesh 8000 | commercially available |
| 3.C. | 1 | rubber block | - | commercially available |
| 3.C. | as required | polish | Xerapol | commercially available |
| 3.C. | as required | finish | - | commercially available |
| 3.C. | as required | polishing cloth | - | commercially available |

3. Window Repairs

A. Damage Limits
Maximum crack length: 150 mm (6 in.)
Do not repair cracks which are located in the pilot's forward field of view.

B. Temporary Repairs
(1) Stop-drill the ends of short cracks. Use a 2,5 mm (3/32 in.) drill.

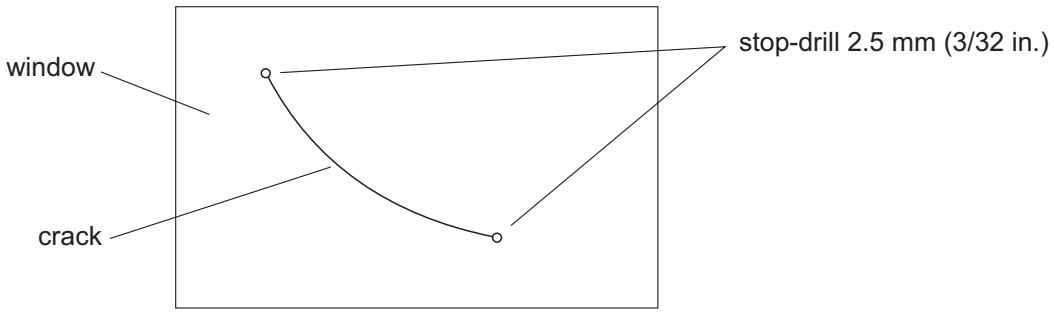


(2) Repair the crack not later than the next 100-hour inspection.

C. Permanent Repairs
(1) Remove canopy (refer to 52-10-00).
(2) Put canopy on a firm working surface with the crack horizontal.
(3) Put protective covers over the inside of the cockpit.
(4) Mask area around the crack on both inner and outer surfaces.
(5) Cut a groove along the crack in the outer surface of the window.

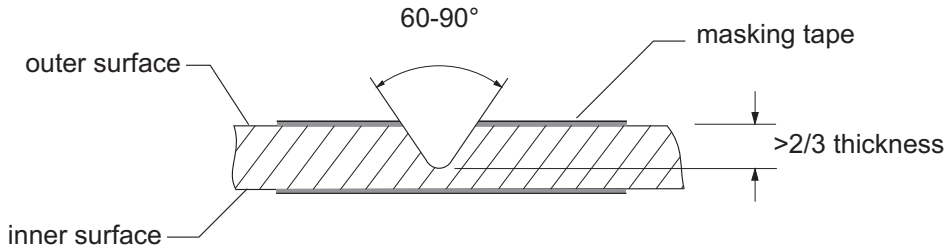


(6) Countersink temporary stop drill holes.
(7) Seal the stop-drill holes on the inner surface. Use plastic adhesive tape.
(8) Apply filler to the groove and the stop drill holes.

NOTE: Fillers become smaller when they cure. Apply enough filler to be above the level of the window surface. Cut the filler back when it has cured.
Keep the filler in place with plastic adhesive tape when repairing a vertical crack.
Apply a second coat of filler after the first coat has cured.

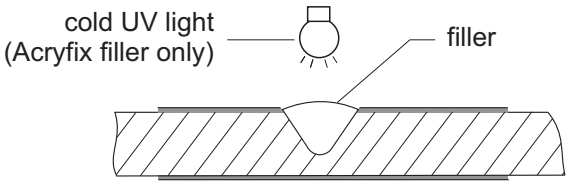


(9) Let the filler cure (refer to manufacturer's instructions).
(10) If possible, turn the window so that the inner surface is up. Remove any plastic adhesive tape.

(11) Cut a groove along the crack in the inner surface of the window.

NOTE: This groove is less deep than the outer surface groove. It must cut into the outer layer of filler. This prevents holes in the filler.

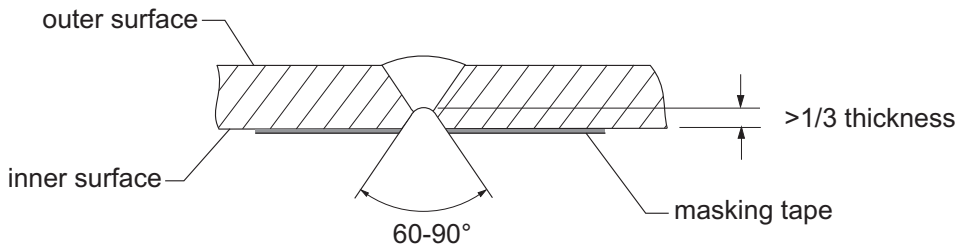


(12) Countersink the filler in the stop drill holes on the inner surface to 1 mm (0.04 in.).
(13) Apply filler to the groove and the stop drill holes.

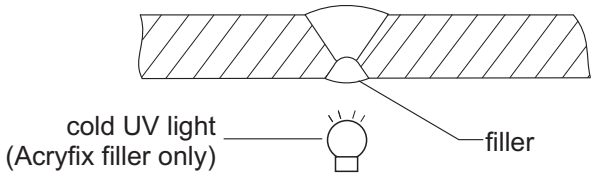


(14) Let the filler cure (refer to manufacturer's instructions).
(15) Remove the masking materials.
(16) Grind the filler on inner and outer side to the profile of the surface using wet abrasive paper and a sanding block.

NOTE: Grains of sand between the acrylic glass surface and the abrasive paper can cause deep scratches. Abrasive paper must not crinkle or crease. When changing to a finer grain size grind crosswise to the previous grinding direction.

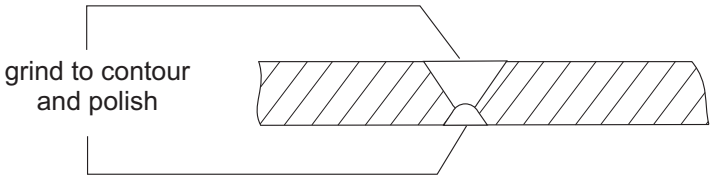


(17) Polish the repair area using polish and a polishing cloth.

NOTE: Polishing cloths have to be dust-free. Use only single-use cloths.
Use finish to remove residual polish and to seal the surface.

# CHAPTER 57

# WINGS

## TABLE OF CONTENTS


| Title | Chapter Section Subject | Page |
|---|---|---|
| WINGS - GENERAL | 57-00-00 | 1 |
| Introduction | 57-00-00 | 1 |
| General Description | 57-00-00 | 1 |
| WINGS - MAINTENANCE PRACTICES | 57-10-00 | 201 |
| General | 57-10-00 | 201 |
| Tools, Equipment and Material | 57-10-00 | 201 |
| Wings Removal/Installation | 57-10-00 | 201 |
| Inspection of bonding between Wing Spar and Wing, upper shell | 57-10-00 | 205 |
| CONTROL SURFACES - MAINTENANCE PRACTICES | 57-50-00 | 201 |
| General | 57-50-00 | 201 |
| Flaps Removal/Installation | 57-50-00 | 201 |
| Ailerons Removal/Installation | 57-50-00 | 201 |
| Adjustment - Control Surface Balancing | 57-50-00 | 203 |

# WINGS - GENERAL

1. Introduction

   A. This chapter describes the wing, flaps, and aileron structures. Maintenance information is provided.

2. General Description

   A. The wings of the AQUILA AT01 are manufactured from composite materials, which provide excellent smooth and seamless flight surfaces. They are of cantilever, semi-monocoque design, with a one-piece main spar, ribs and shear webs covered with top and bottom shells. The wing trailing edge contains conventional ailerons and flaps.
   Each wing incorporates an integral fuel tank, which is located in front of the main spar at the inboard portion of the wing.

## WING - MAINTENANCE PRACTICE

1. General

A. The wing structure is shown in figure 201. The wing main spar is manufactured in one piece. The I-section spar has caps, made from unidirectional carbon fiber and a GFRP composite sandwich web.
The ribs, including the flap control ribs and the shear webs are of a rigid GFRP molding. The wing top and bottom shells are bonded to the spar, ribs and aft shear web forming a torsion box that carries all of the wing bending and torsion loads. Each shell has a sandwich structure with a rigid foam core.
The wing main spar passes under the fuselage below the two seats. Each wing half ends inboard with a front root rib and a rear root rib, which are mounted to the fuselage center section with a bolt each. The four lateral force bolts are inserted from the cabin through the fuselage bushings into the wing bolt housings and secured axially with screws. The bushes and bolts transfer shear loads into the fuselage center section.

B. The section provides removal and installation instructions for the wings.

2. Tools, Equipment and Material

| Required in | Quantity | Equipment | Parts No. | Manufacturer |
|---|---|---|---|---|
| 3. A./B. | 1 | Wing Stand | - | AQUILA GmbH |
| 3. A. | 1 | Wing Attach Bolt Removal Tool | - | AQUILA GmbH |

3. Wing Removal/Installation

CAUTION! AT LEAST SEVEN PERSONS MUST BE INVOLVED FOR WING REMOVAL OR INSTALLATION. A SHORT BRIEFING IS RECOMMENDED PRIOR TO ACCOMPLISHING PROCEDURE.

A. Remove the Wing
(1) Prepare a suitable, padded stand for proper storage of the removed wing.

NOTE: It is recommended to use the special wing stand, which may be obtained from AQUILA Technische Entwicklungen GmbH.

(2) Shock the main wheels fore and aft.
(3) Ensure the fuel selector / shut-off valve and the BAT switch are in off position.
(4) Drain fuel from wing fuel tanks.
(5) Remove elevator pushrod No. 1 (Refer to 27-30-00).
(6) Open access / inspection plate 210 AB (belly closeout) (Refer to 06-10-00).
(7) Inside the spar tunnel disconnect electrical wires at connector.
(8) Disconnect fuel lines (four places).

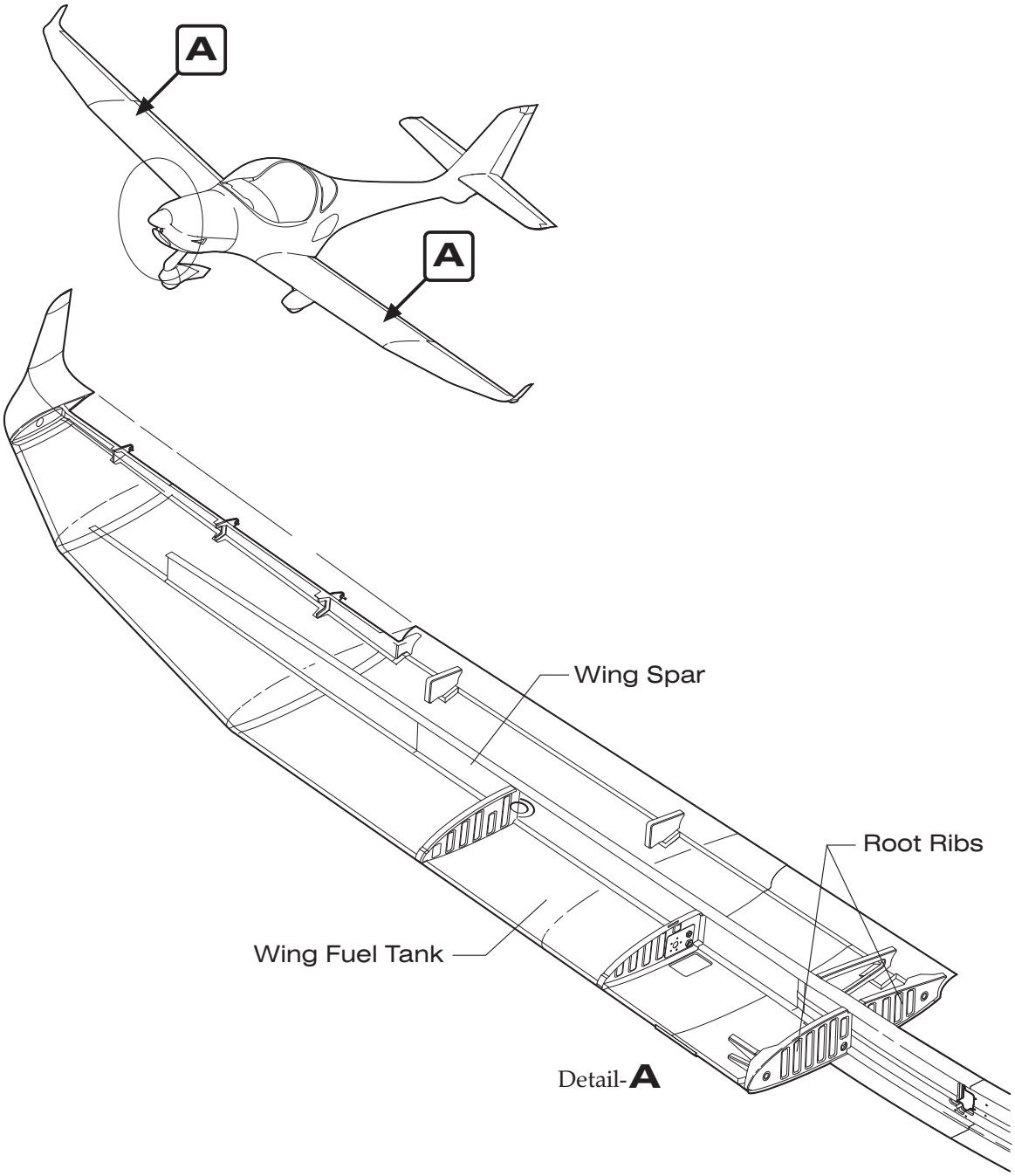


Wing Structure
Figure 201

(9) Identify and disconnect pitot and static lines.
(10) Disconnect aileron front from aileron rear bellcrank (Refer to 27-10-00).
(11) Disconnect flap actuator from flap torque tube assembly (Refer to 27-50-00).

NOTE: Tape flaps in the streamlined position during wing removal. This will prevent flap movement during handling.

CAUTION: FOR THE REST OF THIS PROCEDURE AT LEAST ONE PERSON MUST SUPPORT / LIFT EACH WING OUTBOARD END, AT LEAST ONE PERSON MUST SUPPORT / LIFT THE LEADING EDGE AT THE ROOT RIB OF EACH WING HALF, AND AT LEAST ONE PERSON MUST SUPPORT / LIFT THE TRAILING EDGE AT THE ROOT RIB OF EACH WING HALF.

DO NOT LIFT WING ON ANY CONTROL SURFACE!

(11) From inside the cabin remove bolts securing wing attach bolts.
(12) Supporting the wing remove wing attach bolts.
(a) Install wing attach bolt removal tool.
(b) Extract the bolt.

NOTE: It may be necessary to rock the wing slightly to remove attach bolts.

CAUTION: MIND LANDING GEAR STRUTS AND AILERON BELLCRANK IN THE FUSELAGE BELLY:

(13) Remove wing carefully from aircraft and lay on padded stand.

B. Install the Wing
(1) Perform a pre-installation check.
(a) Examine the wing attach bolt bushings for damage and condition. Look especially for the inner faces.
(b) Examine the wing root ribs as well as the outer ribs of the fuselage center section for damage and condition. Check the area around the bushings. Check for looseness between bushings and ribs.
(c) Check the wing attach bolts for any damage and condition.
(2) Position wing to the aircraft and install wing attach bolts.

NOTE: Lightly lubricate wing attach bolts with grease before installing bolts (Refer to 12-22-00).

(3) Install bolts securing wing attach bolts. Torque bolts to 11,5 Nm (102 in.lb) and safety wire.
(4) Inside the spar tunnel connect flap actuator to flap torque tube assembly (Refer to 27-50-00).
(5) Connect aileron front to aileron rear bellcrank (Refer to 27-10-00).
(6) Connect fuel lines (four places).
(7) Reconnect pitot and static lines.
(8) Connect electrical wires at connector.
(9) From inside the cabin install elevator pushrod No. 1 (Refer to 27-30-00).
(10) Perform aileron control system Inspection/Check (Refer to 27-10-00).

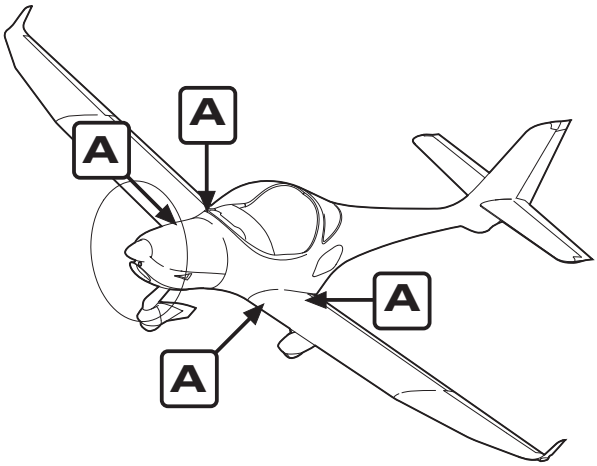


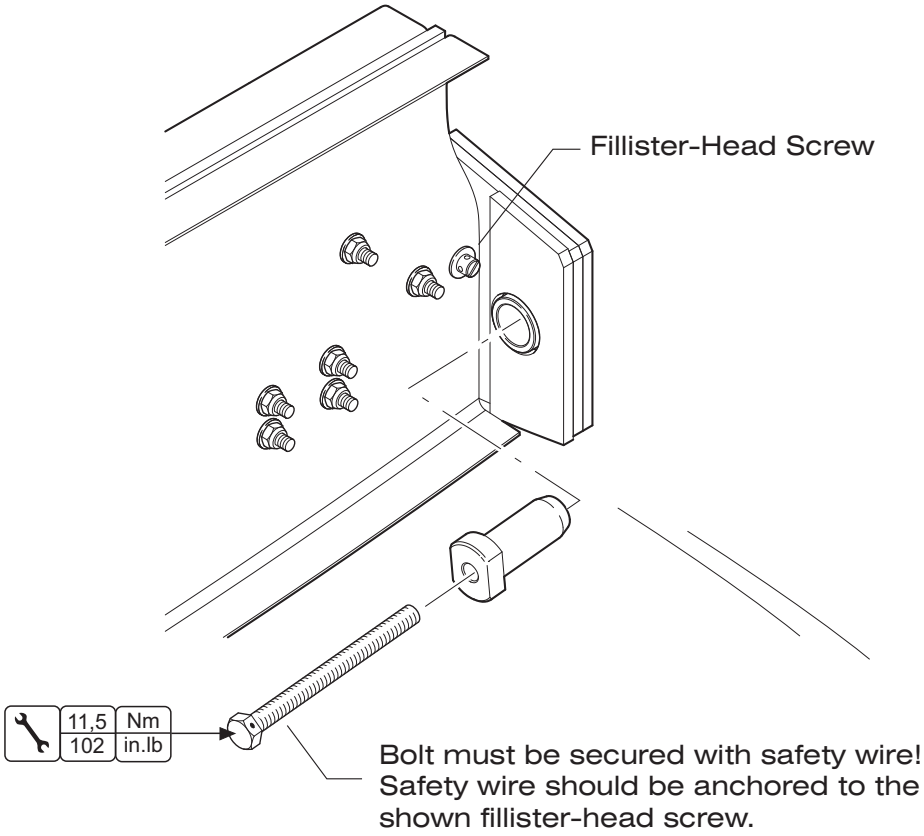


Note: The rear right location is shown.

Wing Bolt Installation
Figure 201

(11) Perform elevator control system and elevator trim system Inspection/Check and rig system if necessary as described in 27-30-00 and 27-31-00.
(12) Perform flap control system Inspection/Check and rig system if necessary as described in 27-50-00.
(13) Check NAV lights, strobe lights, stall warning system and pitot / static system for proper operation.
(14) Install all removed access / inspection plates and upholstery.
(15) After refueling wing tanks check fuel level indicating system for proper operation.
(16) Check inside the spar tunnel fuel lines and fittings for signs of leakage.

4. Inspection of bonding between Wing Spar and Wing, upper shell

A. Recommended tools for carrying out the inspection.

(1) Inspection lamp in longitudinal shape to be inserted through the opening of the strobelights.
or
(2) Endoscope with a long finger system.
or
(3) Videocamera system with dia. 15-25 mm with monitor and cable extensions.

B. Openings for inspecting the bonding between wingspar cap and wingshell.

(1) Dismount and disconnect strobelights left and right at the wingtip.
(2) Dismount coverplates at the outer inspection openings on the lower wing shell.
(3) Dismount pitot system at the lower wingshell.
(4) Dismount coverplates of the aileron pushrods at the lower wing shell.

C. Methods of inspection

(1) Lift wing at the wingtip with a hand force of 20-30 kg and fix this position and load by soft supports under the wing as shown in figure 203.
(2) Place inspection lamp through the strobelight opening in front of the outer wingspar according to figure 204 to have a strong light in the background.
(3) Inspect visually the bonding between wingspar cap and wingshell from the end of the spar to the aileron control lever through the inspection or strobelight -holes. If there is a bonding defect a small gap between wingshell and wingspar cap which is lighted is clearly visible from the beginning of the wingspar. Instead of a visual inspection camera systems and endoscopes can be used
(4) If bonding defects according to this description are found an inspection report has to be sent via FAX to Aquila GmbH and the aircraft has to be grounded for normal operation.

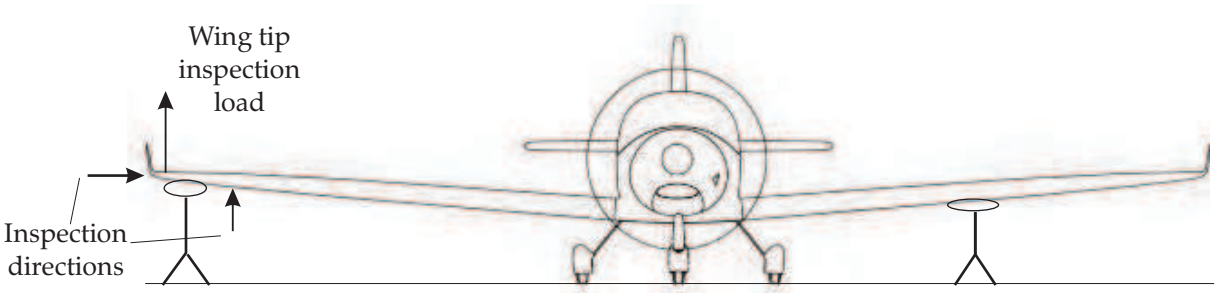


Application of inspection load
Figure 203

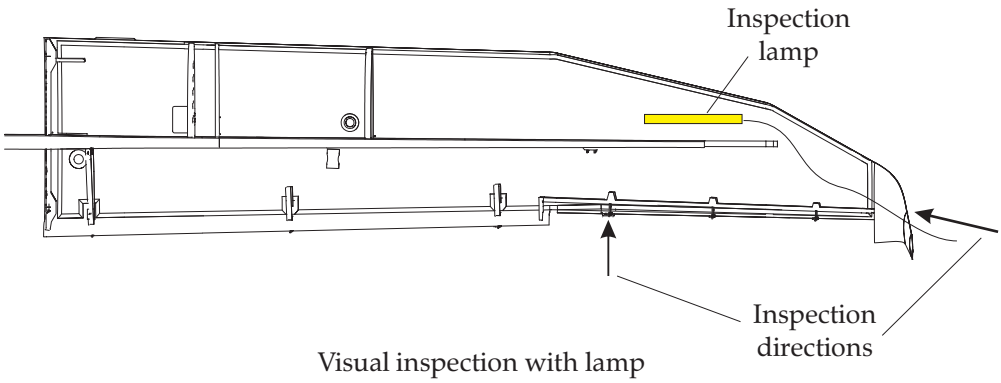


Visual inspection with lamp
Figure 204

## CONTROL SURFACES - MAINTENANCE PRACTICES

1. General

A. The flap structure is shown in figure 201. The top and bottom shells have a sandwich structure with a rigid foam core. Between the shells ribs bonded. To each rib, a GFRP molding, bonds a flap hinge arm.

B. The aileron structure is shown in figure 201. The top and bottom shells have a sandwich structure with a rigid foam core. Between the shells in the front area are hinge brackets, a GFRP molding, bonded. To the most inboard bracket bonds additional the aileron horn.
To correct tendency to roll precisely, a ground-adjustable trim tab at the leading edge of the left aileron is provided. The trim tab is mounted to aileron with screws, washers and nuts.

C. This section contains instructions for flaps and aileron removal and installation and procedures for control surface balancing.

D. Figure 201 shows the flaps and aileron structure.

2. Flap Removal/Installation

A. Remove a Flap
(1) Retract flaps fully.

CAUTION! WHEN DISCONNECTING FLAP PUSH-PULL ROD FROM FLAP HORN, EXERCISE CAUTION TO PREVENT THE FLAP FROM INADVERTENT SWINGING DOWNWARD.

(2) Supporting flap disconnect flap push-pull rod at the flap horn.
(3) Allow the flap swing down and remove three castellated nuts securing flap on hinge pins.
(4) Slide flap inboard clear of the hinge pins and remove flap from wing.

B. Install Flaps
(1) Place the flap into position and secure with washer and castellated nut at each of the three hinge mounts.
(2) Connect flap push-pull rod to flap horn.
(3) Secure three castellated nuts with cotter pins.
(4) Check proper operation of flaps.

3. Aileron Removal/Installation

A. Remove Aileron
(1) Lower the flaps fully.
(2) At the inboard hinge, remove castellated nut securing aileron on hinge pins.

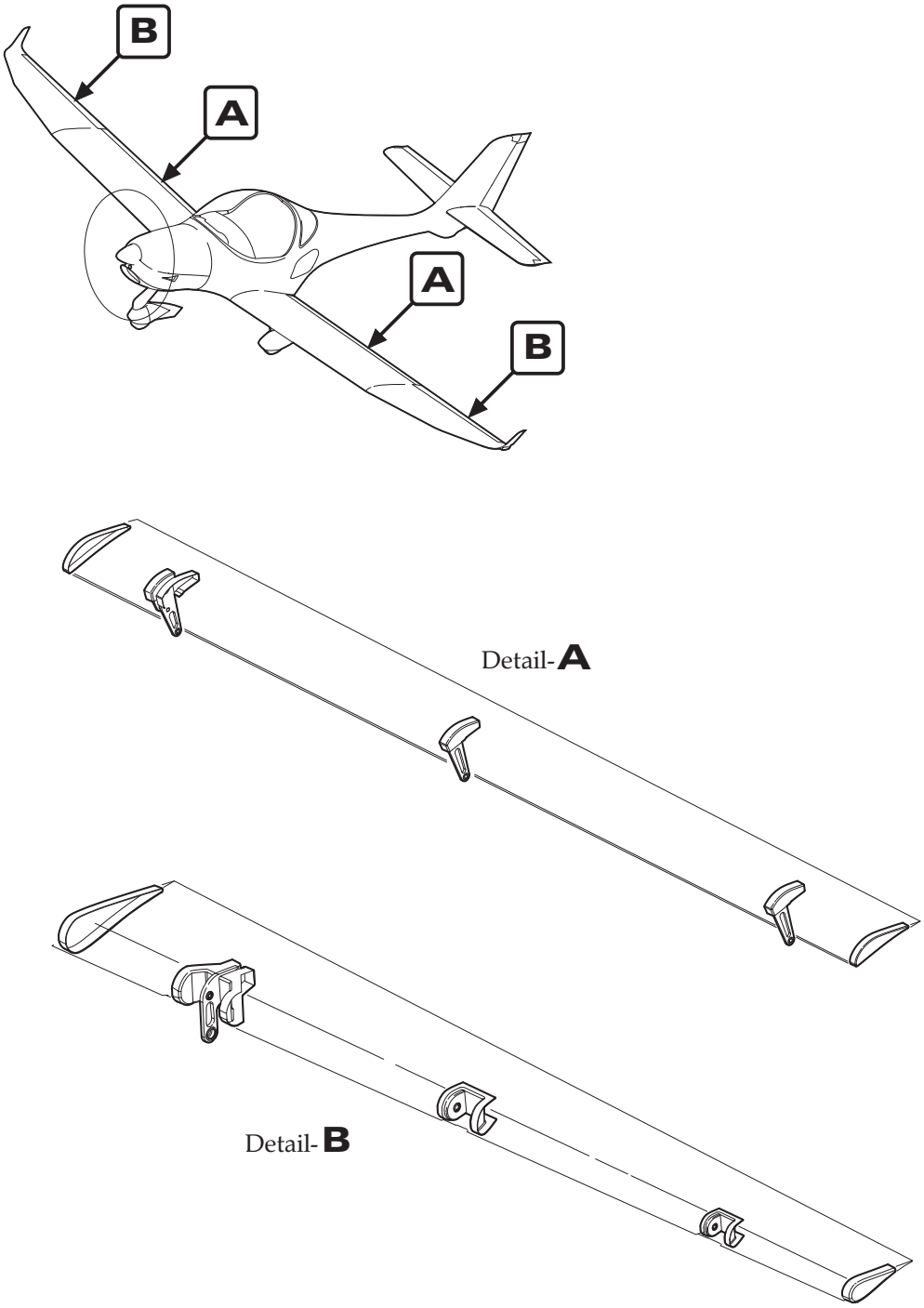


Flap/Aileron Structure
Figure 201

(3) Slide aileron inboard clear of the hinge pins and remove aileron from wing.

B. Install Aileron
(1) Place the aileron into position and secure with washer and castellated nut at inboard hinge.

4. Adjustment - Control Surface Balancing

Weighing and determination of control surface moment should be performed after repairs or painting. The residual moment of the control surface and its maximum permissible total weight should be within the ranges as specified in 06-10-00.

To weigh a control surface, it must be removed from aircraft. Weighing can be accomplished using any convenient method.

WARNING: CORRECT CONTROL SURFACE BALANCE IS IMPORTANT FOR THE FLIGHT SAFETY. OUT OF BALANCE CONTROL SURFACES CAN FLUTTER AND CAUSE STRUCTURAL FAILURE.

A Aileron Balancing

NOTE: Calculate the static control surface moment as follows: M = F x r [Nm]

NOTE: The following procedure is typically for left and right aileron.

(1) Disconnect aileron from aileron push-pull rod.
(2) Weigh by means of a conventional spring balance at the given weighing point (Refer to figure 204).
(a) Attach spring balance at weighing point. The initial position of the aileron for each measurement should be horizontally with the chord line.

NOTE: The chord line is defined as the line extending from the trailing edge through the hinge line.

(b) Raise the spring balance slowly until the control surface begins to move. Note the reading and the direction of the movement (i.e. 11.2 N up).
(c) Lower the spring balance slowly until the control surface begins to move down. Note the reading and the direction of the movement to (i.e. 11.8 N down).
(3) Calculate moments as described above. Both results must be within the permitted limits.

B Wing Flap Balancing

NOTE: Calculate the static control surface moment as follows: M = F x r [Nm]

(1) Disconnect flap actuator from torque tube coupler (Ref. to 27-50-00).
(2) Weigh by means of a conventional spring balance at the given weighing point (Refer to figure 204).
(a) Attach spring balance at weighing point. The initial position of the flaps for each

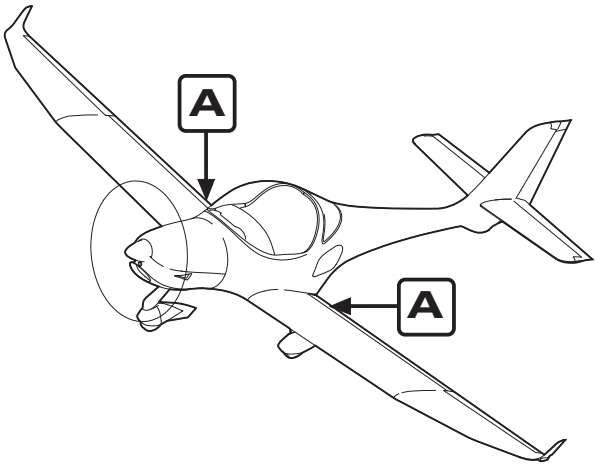


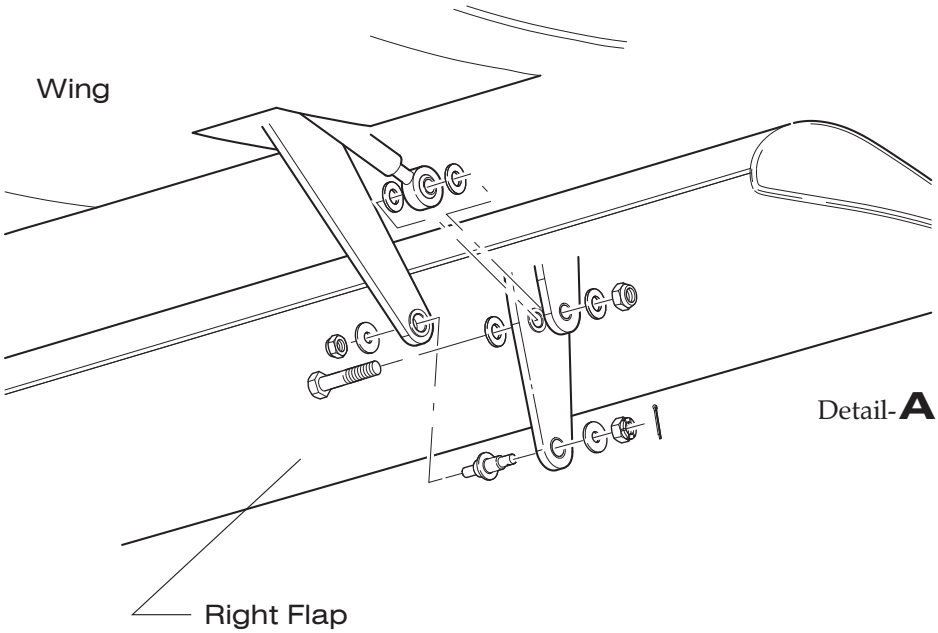


Flap Installation (Inboard Hinge with Flap Horn)
Figure 202

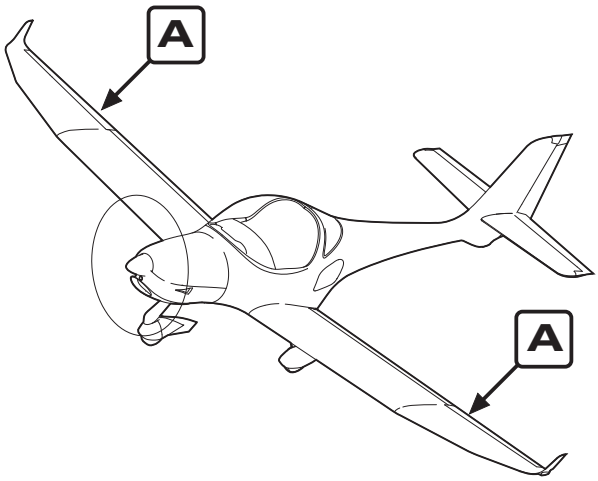


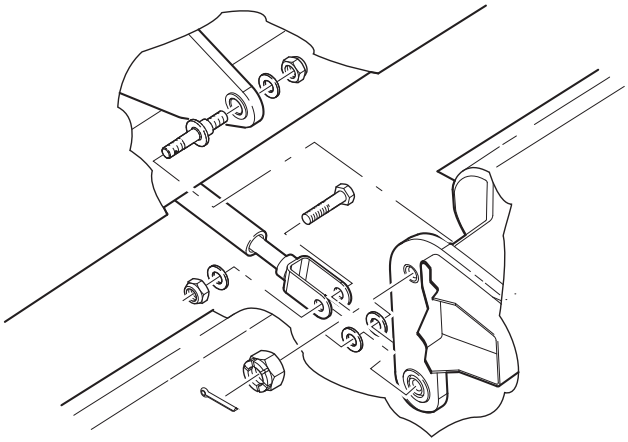

Detail-**A**

Aileron Installation (Inboard Hinge with Aileron Horn)
Figure 203

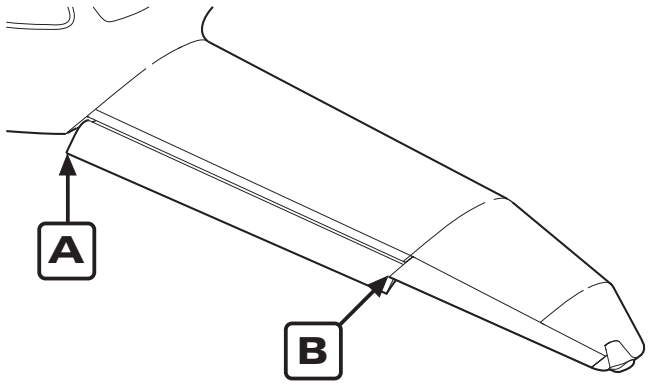


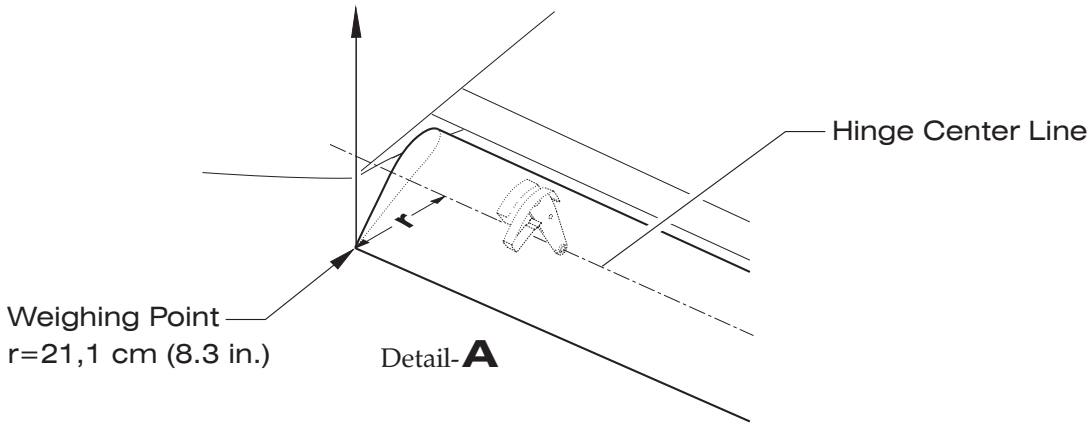


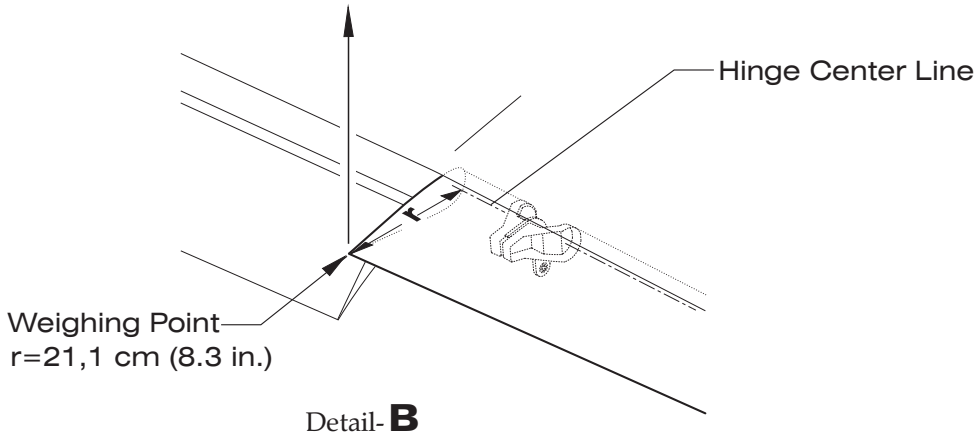


Flap / Aileron Balancing
Figure 204

measurement should be 35° down.

(b) Raise the spring balance slowly until the control surface begins to move. Note the reading and the direction of the movement (i.e. 11.2 N up).

(c) Lower the spring balance slowly until the control surface begins to move down. Note the reading and the direction of the movement to (i.e. 11.8 N down).

(3) Calculate moments as described above. Both results must be within the permitted limits.

# CHAPTER 61

# PROPELLER

## TABLE OF CONTENTS


| Title | Chapter Section Subject | Page | Effectivity |
|---|---|---|---|
| PROPELLER - GENERAL | 61-00-00 | 1 | |
| Introduction | 61-00-00 | 1 | |
| General Description | 61-00-00 | 1 | |
| PROPELLER - TROUBLESHOOTING | 61-00-00 | 101 | |
| General | 61-00-00 | 101 | |
| Troubleshooting | 61-00-00 | 101 | |
| PROPELLER ASSEMBLY - MAINTENANCE | 61-10-00 | 201 | |
| General | 61-10-00 | 201 | |
| Tools, Equipment and Material | 61-10-00 | 201 | |
| Description | 61-10-00 | 201 | |
| Propeller Removal/Installation | 61-10-00 | 202 | |
| Inspection/Check | 61-10-00 | 203 | |
| Cleaning | 61-10-00 | 203 | |
| Repairs | 61-10-00 | 203 | |
| PROPELLER CONTROL - MAINTENANCE | 61-20-00 | 201 | |
| General | 61-20-00 | 201 | |
| Tools, Equipment and Material | 61-20-00 | 201 | |
| Description | 61-20-00 | 201 | |
| Governor Removal/Installation | 61-20-00 | 201 | |
| Inspection/Check | 61-20-00 | 203 | |
| Adjustment/Test | 61-20-00 | 204 | |

# PROPELLER - GENERAL

1. Introduction

   A. This chapter describes the propeller. Maintenance information is provided.

   B. Revs given in this chapter are propeller speeds.

2. General Description

   A. The aircraft uses a MT-Propeller MTV-21-A/175-05 variable pitch, two blade wood-composite propeller. The propeller has a governor which controls propeller pitch hydraulically. The governor keeps the pre-selected propeller speed at a constant value, regardless of manifold pressure and airspeed.

## PROPELLER - TROUBLESHOOTING

### 1. General

A. The following chart lists some of the more common troubles which may occur with the propeller, their probable causes and remedies.

### 2. Troubleshooting Chart

| Trouble | Probable Cause | Remedy |
|---|---|---|
| Static rpm too low | Propeller limits engine speed. | Reduce pitch with the check nuts on the piston guide. Turning loose nut by ¼ turn will increase rpm by approx. 100 rpm. |
| | Governor limits engine speed. | Increase governor rpm by unscrewing the stop screw. One turn on screw will change rpm by approx. 25 rpm. Ensure the control is long enough to be able to touch the stop. Secure screw with safety wire. |
| Rpm in flight too high | Governor allows overspeed. | Adjust rpm to the desired value in flight and turn the stop screw after landing until it touches the governor lever. Do not change position of the rpm control during final approach. Secure screw with safety wire. |
| Blade shake (Fore and aft movement) | Blade bearing loose. | If more than 3 mm, return propeller to the factory or any approved repair station to correct the pre-load of the blade retention bearing. |
| Blade shake (Blade angle play) | Blade loose due to blade bearing setting and/or increased play through wear in the pitch change mechanism (pitch change pin, pitch change block). | If more than 2°, return propeller to the factory or any approved repair station. |
| Sluggish rpm change | 1. Oil is cold.<br>2. Excessive friction. | Run engine until oil temperature is in the green arc.<br>Move blades by turning them by hand within the angular play. If excessive friction exists, the blade retention system has to be inspected, contact factory. |

2. Troubleshooting Chart (Cont.)

| Trouble | Probable Cause | Remedy |
|---|---|---|
| Surging rpm | 1. Trapped air in propeller piston. | Move propeller control at least twice before flying at about 1800 rpm with a drop of about 500 rpm. |
| | 2. Sludge deposit. | Clean oil tubes in the motor, in the propeller piston and eventually in the governor (only possible at the manufacturer). |
| | 3. Wrong speeder spring in in the governor. | Check that the governor part number corresponds to the aircraft data sheet. If the rpm does not stabilize after 5 periods this is an indication for a wrong speeder spring, contact factory. |
| | 4. Wrong pitch stops in the propeller. | Compare pitch values to those of the data sheet. Note static rotational speed. |
| | 5. Abrupt movement of of propeller or throttle control. | Move the controls carefully and slowly. |
| | 6. Wrong carburetor setting. | Correct as specified in the engine manual. |
| | 7. Oscillating tachometer. | Check tachometer and transmitter. |
| Rpm variations (more than ±50 rpm) between climb, cruise, and descent at identical propeller setting. | 1. Excessive friction in the hub. | Contact manufacturer. |
| | 2. Excessive friction in the governor. | Contact manufacturer. |
| | 3. Worn rpm tachometer. | Replace/repair instrument. |
| Rpm increase during normal operation without change of propeller lever position. | 1. Oil leakage or hot oil. | Check for oil leaks, replace gaskets, decrease oil temperature with higher air speed. |
| | 2. Worn oil transfer causes a decrease in blade angle of attack. | If the system works with cold oil and fails at high oil temperature, this indicates high leakage in the oil transfer system on the propeller shaft. Repair engine. |
| | 3. Internal leakage in the propeller. | Contact manufacturer |
| | 4. Governor drive failure or broken relief valve spring. | Check governor drive and governor on the test bench. If sudden oil leakage occurs, move power lever back until the rpm decreases. In this condition the propeller goes back to the low pitch stop automatically and no oil pressure is needed. Adjust the propeller control for take off position. Apply enough |

2. Troubleshooting Chart (Cont.)

| Trouble | Probable Cause | Remedy |
|---|---|---|
| | | power to remain about 100 rpm below take-off rpm. Note that propeller rpm should be always lower than adjusted with the propeller control. This will hold the governor in an underspeed condition and no oil pressure will be transferred from the governor to the propeller. |
| Rpm decrease during normal operation without change of propeller lever position. | 1. Speeder spring in the governor broken.<br>2. Dirt in the fuel system or carburetor.<br>3. Control inoperative. | Check governor on the test bench.<br>Clean or repair.<br>Check free movement and positive stop contact.<br>If the cause cannot be found in the fuel system the flight may be continued when throttle setting is reduced, avoiding excessive manifold pressure and overheating of the engine. The rpm will remain low because the propeller pitch is on the high pitch stop. |
| Extremely slow pitch change or no pitch change on ground (rpm changes with airspeed like a fixed pitch propeller) | 1. Blocked oil line.<br>2. Sludge deposit in propeller (This does not occur suddenly but slowly worsens over time.).<br>3. Damaged pitch change mechanism.<br>4. Corrosion in the blade bearings. | Check engine.<br>Clean propeller and crankshaft.<br>Contact manufacturer. This error may appear suddenly.<br>Repair propeller. |
| Oil leakage (visible outside or hidden inside) | Damaged gasket. | Replace gaskets or repair propeller. |
| Rough running engine, possibly in limited rpm range only | 1. Bad static balance.<br>2. Bad dynamic balance.<br>3. Operation in restricted rpm range. | Re-balance statically, mount balance weights to forward spinner bulkhead.<br>Re-balance dynamically, mount balance to rear spinner bulkhead.<br>Refer to airplane flight manual.<br>Check rpm gauge for correct reading.<br>Repair or replace if necessary. |

## PROPELLER ASSEMBLY - MAINTENANCE

1. General

A. The aircraft is equipped with a MT-Propeller MTV-21-A/175-05 variable pitch, two blade wood-composite propeller.

B. For more detailed information on the installed propeller, refer to MT-Propeller E-124 operation and installation manual for hydraulically controlled variable pitch propeller, latest revision.

2. Tools, Equipment and Material

| | Quantity | Equipment | Parts No. | Manufacturer |
|---|---|---|---|---|
| 4.B. | 1 | O-ring | AT01-7310-104 | AQUILA Aviation |

3. Description

A. The variable pitch propeller consists of the following main groups: hub with blade bearings and pitch change mechanism, blades and spinner.

Hub

The one-piece hub is made from forged or milled aluminum alloy with the outer surface shot-peened and anodized. The blade bearings are specially designed ball bearings where the ball acts as a split retainer in order to hold the blades in the hub, creating an increased safety factor against blade loss. The outer bearing race is made as one-piece and is pressed into the hub, while the inner race is split and installed on the blade ferrule. The blade preload is adjusted by the thickness of plastic shims. Blade and bearing are held in the hub by a retention ring.
Blade pitch change is achieved via a pin in the blade root. A plastic block connects the blade with the piston and the axial movement of the servo piston turns the blades. The return spring and the sleeve, which acts as high (low) pitch stop, are installed on the front piston.
There are two check nuts outside the hub with which the low (high) pitch stop can be adjusted.
The inner part of the hub is used as the cylinder for the pressure oil. This arrangement allows a simple and light-weight design. Balance wieghts are installed in the front spinner support.

Blades

The propeller has wood-composite (natural composite) blades, using high compressed wood in the root and lightweight wood in the remaining body. Epoxy fiberglass covers the entire blade surface and is painted with acryl varnish. The outer portion is protected against erosion by a stainless steel erosion sheath bonded to the blade edge. The inner portion of the blade is protected by a self-adhesive PU-strip. The blade ferrule is attached with special lag screws to the blade root and is additionally bonded with epoxy resin.

Spinner

The spinner dome is a one-piece part made from fiber reinforced composite. The bulkhead is truncated aluminum alloy. Filler plates increase the stiffness of the dome on the cutouts for the blades. The dome is mounted to the bulkhead by means of screws.

4. Propeller Removal/Installation

A. Remove Propeller
(1) Ensure ALT/BAT and ignition switches are OFF and the throttle is closed.
(2) Remove upper engine cowling (refer to 71-10).
(3) Remove screws securing spinner dome to spinner bulkhead and remove spinner.
(4) Remove alternator belt from alternator pulley (refer to 24-20).
(5) Position a hoist and lifting sling in front of the aircraft and attach sling to propeller.
(6) Place a drain pan beneath propeller to catch oil spillage.
(7) Loosen and remove nuts and washers attaching propeller to engine flange.
(8) Remove propeller from aircraft.

CAUTION: DO NOT STORE PROPELLER ON IT'S TIPS!

B. Install Propeller
(1) Clean engine and propeller flange with a suitable cleaning agent.
(2) Apply a light coat of engine oil to new O-ring and insert O-ring into groove inside hub at flange mounting. Check correct position of O-ring in propeller flange.
(3) Place alternator belt around V-belt pulley.

CAUTION: CARE MUST BE TAKEN WHEN INSTALLING THE PROPELLER. THE PROPELLER SHOULD NOT BE PULLED ON TO THE ENGINE FLANGE WITH THE NUTS IN ORDER TO AVOID DAMAGE TO THE HUB AND TO AVOID SHEARING OFF MATERIAL CAUSING OIL LEAKS ON THE O-RING.

(4) Using hoist and sling, put propeller in position to engine mounting flange.
(5) Put V-belt pulley with carriers in position to engine mounting flange.

CAUTION: STOP NUTS WITH WASHERS SHOULD BE TIGHTENED CROSSWISE WITH EQUAL FORCE TO AVOID HUB DAMAGE.

(6) Install washers and nuts securing propeller assembly to engine flange. Torque nuts to 45 - 47 Nm (398 - 416 in.lbs).
(7) Check track of blades (max. 3mm [1/8 in.] measured approx. 10 cm [4 in.] from the tip on the trailing edge).
(8) Install spinner dome on bulkhead observing mating marks. Torque screws with plastic washers 4 - 5 Nm (35 - 44 in.lbs). Check runout of the dome. Max. 2 mm (0.08 in.) permissible.
(9) Install alternator belt and adjust belt tension (refer to 24-20).
(10) Install upper engine cowling (refer to 71-10).
(11) Carry out a functional test (refer to 61-20).

5. Inspection/Check

A. Inspection/Check
(1) Remove screws securing spinner dome to spinner bulkhead and remove spinner.
(2) Check spinner for cracks and other damage.
(3) Perform a visual inspection of the propeller blades.
(a) Check for critical cracks (refer to MT-Propeller E-124 operation and installation manual for hydraulically controlled variable pitch propeller)
(b) Inspect for notches, dents, nicks or other damage. Repair as required (refer to 61-10).
(c) Check that the metal erosion sheath is not loose.
(d) Check that proper PU-strip is in place.
(4) Check blade shake, max. 3 mm (1/8 in.).
(5) Check blade angle play, max. 2°.
(6) Check track of blades (max. 3mm [1/8 in.] measured approx. 10 cm [4 in.] from the tip on the trailing edge).
(7) Inspect outside condition of the hub and parts for cracks, corrosion, deterioration.
(8) Inspect check nut for low pitch stop for tightness.
(9) Check safety wiring.
(10) Check flange stopnuts for tightness.
(11) Inspect blade root and hub for oil and grease leaks.

B. Overspeed
If up to 110 % take-off rpm of the approved engine/propeller combination is experienced, immediately perform a 100 hrs inspection (refer to MT-Propeller E-124 operation and installation manual for hydraulically controlled variable pitch propeller). A factory overhaul is required if overspeeds between 111 % and 120 % are experienced. A ferry flight can be undertaken after performing a 100-hours inspection. If more than 121 % is experienced, the propeller may not be used again and must be returned to the factory for investigation.

6. Cleaning

A. Clean propeller if necessary with any car wash solution or equivalent.

7. Repairs

CAUTION: IT IS IMPORTANT TO AVOID MOISTURE PENETRATING INTO THE WOODEN CORE OF THE PROPELLER BLADES. IF IN DOUBT, CONSULT AN AIRCRAFT INSPECTOR FOR FINAL DECISION ON REPAIR.

A. Normal stone nicks are unimportant as long as the plastic protection of the wood core exists. Air bubbles with a maximum diameter of 15 mm (0.6 in.) are also unimportant as long as their size does not increase during use.

Scratches and nicks should be protected during routine maintenance with a coating of water resistant varnish.

B. Trailing edge splitting can arise from a stone hit. If the split is not longer than 40 mm (1.5 in.), it can be glued with epoxy cement. If some wood is missing (not deeper than 8 mm [0.25 in.]), fill damaged area with epoxy, let it harden, grind surface smooth and cover with water-resistant varnish, preferably polyurethane.

C. Small surface scratches and nicks can be repaired by filling them with epoxy resin and covering them with polyurethane varnish.

D. The manufacturer can repair broken blade tips if more than 7/8 of the blade still exists without cracks. Blade tipping can be replaced. Damaged trailing edges can be repaired.

E. Damaged or missing PU strips on the leading edge must be replaced by new ones.

## PROPELLER CONTROL - MAINTENANCE

1. General

A. The aircraft is equipped with a constant speed propeller. A MT-Propeller P-850-12 governor controls the blade pitch.

B For more detailed information on the installed governor, refer to MT-Propeller E-1048 operation and installation manual for hydraulically constant speed governor P-8( )( )-( ), latest revision.

2. Tools, Equipment and Material

| | Quantity | Equipment | Parts No. | Manufacturer |
|---|---|---|---|---|
| 4.B. | 1 | gasket | AT01-7080-012 | AQUILA Aviation |

3. Description

A. The necessary pressure to adjust the propeller is achieved by a gear pump in the governor which increases engine oil pressure. A flyweight and a speeder spring move a valve, allowing oil flow to and from the piston in the propeller. In on-speed condition there is no oil flow. A speed-adjusting lever changes the pre-load of the speeder spring which finally results in a change in engine speed. The propeller has a single-acting piston to increase pitch, whereas the natural twisting forces of the blades reduce propeller pitch. The governor produces oil pressure to increase pitch. The relief valve pressure should be set to 310 ±10 psi.

4. Governor Removal/Installation (Ref. Fig. 201)

CAUTION: TO PREVENT FOREIGN MATERIAL ENTERING THE SYSTEM, INSTALL COVER TO GOVERNOR MOUNTING PAD.

A. Remove Governor
(1) Remove upper engine cowling (refer to 71-10).
(2) Disconnect governor control cable end from governor control arm.
(3) Remove screws, washers and lockwashers securing governor to crankcase and remove governor from engine.
(4) Remove and discard gasket.

B. Install Governor
(1) Clean engine pad and mounting hardware before installing new mounting gasket. Ensure governor drive spline mates correctly with engine accessory drive spline.
(2) Position new gasket coated with engine oil or equivalent on engine mounting pad.
(3) Install governor on gasket using srews, washers and lockwashers.
Torque to 20 - 24 Nm (180 - 220 in.lbs).
(4) Install governor control cable to governor control arm.

(5) Adjust governor (refer to “Adjustment/Test” below).
(6) Install upper engine cowling (refer to 71-10).
(7) Carry out a functional test (refer to “Adjustment/Test” below).

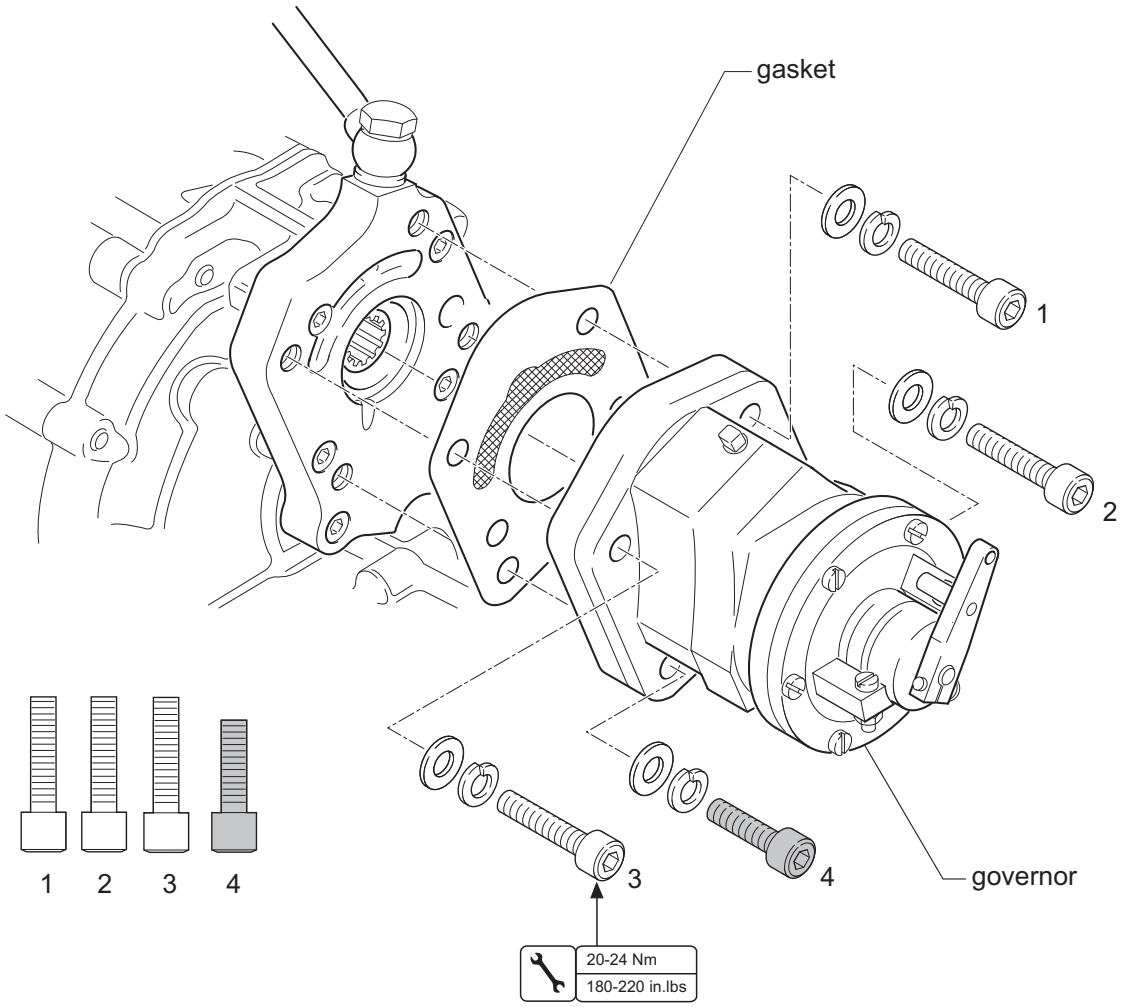


Governor Installation
Figure 201

5. Inspection/Check

A. Perform the following inspections frequently and in particular after any maintenance on the propeller / governor:
   (1) Remove upper engine cowling (refer to 71-10).
   (2) Move the propeller lever in the cabin between max. rpm and min. rpm. Verify the lever moves freely without restrictions trough full range.
   (3) Ensure the propeller lever has positive clearance to the console slot in both the full forward and full aft positions (at least 3 mm [0.125 in.]).

   WARNING: NO OIL LEAKAGE IS PERMITTED.

   (4) Visually inspect governor and installation for any signs of oil leakage.
   (5) Check all screws, bolts and nuts are tightened properly and safety wired, as required.
   (6) Install upper engine cowling (refer to 71-10).

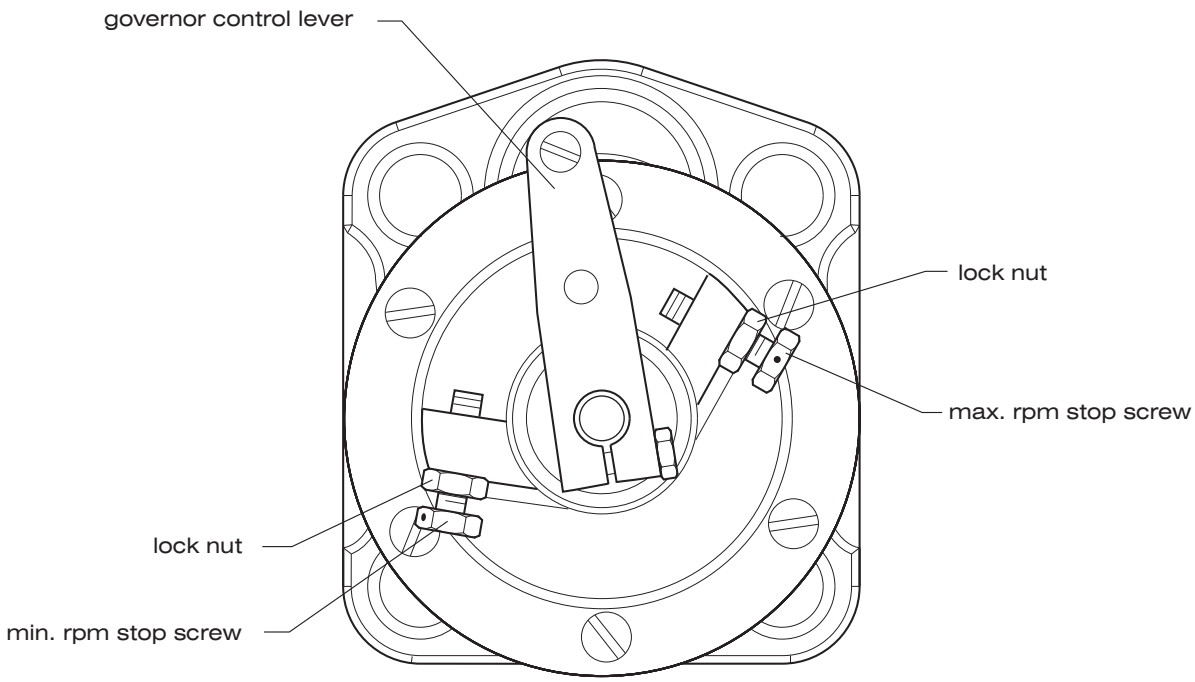


Governor Front View
Figure 202

6. Adjustment/Test

CAUTION: ENGINE TEST RUN MAY BE PERFORMED BY AUTHORIZED PERSONNEL ONLY.

CAUTION: AVOID PROLONGED OPERATION OF THE ENGINE WITH HIGH RPM ON THE GROUND BECAUSE IT CAN RESULT IN EXCESSIVE ENGINE TEMPERATURE AND BLADE DAMAGE.

NOTE: Precise results for propeller rpm setting can only be obtained in flight-tests.
As a general rule, engine redline rpm cannot be reached during a full power static run-up. The governor is not controlling the propeller at this time, the propeller is against its low pitch stop. Attempting to increase propeller static run-up rpm by adjusting the governor high rpm screw will have no effect and will probably result in a propeller overspeed during the take-off roll. The procedure outlined below sets maximum rpm in a limited range only.

NOTE: Always measure propeller speed with an optical revolution counter!

A. Adjustment
(1) Remove upper engine cowling (refer to 71-10).
(2) Remove access panels 211 FT, 211 FB and 211 EC (refer to 25-12).
(3) Remove safety wire from low pitch / high rpm stop screw on governor and unscrew for max. propeller speed. Lock stop screw in that position.

CAUTION: AFTER ADJUSTMENT THE STOP SCREW MUST OVERLAP THE STOP SCREW SUPPORT BY AT LEAST 2 MM (0.08 IN.).

CAUTION: CHECK POSITION OF CONTROL SHAFT WITH CONTROL LEVER AT THE MAX. RPM STOP. ENSURE THAT THE SPLINES ARE NOT BEYOND THE GOVERNOR CASING, OTHERWISE THE O-RING COULD BE DAMAGED. THIS WILL RESULT IN AN OIL LEAKAGE WHICH IS NOT ACCEPTABLE.

(4) Adjust governor control cable on governor control lever jam nut so that governor control arm touches the governor max. rpm control arm stop when the propeller control lever is in max. rpm position.
(5) Continue with step (14) if the propeller is already set up correctly.
(6) Remove spinner and plates from spinner bulkhead (refer to 61-10).
(7) Start and warm up engine.
(8) Slowly increase propeller speed with power lever (propeller lever in max. rpm position) until max. propeller speed is reached.

CAUTION: DO NOT EXCEED A MAX. PROPELLER SPEED OF 2385 RPM!

NOTE: Only the propeller limits the engine speed in this step. Engine speed is not controlled by the governor.

(9) Shut down engine after short cool down period.

(10) Loosen check nuts on propeller hub and mark their position. Adjust max. propeller speed by adjusting the nuts. Turning loose by ¼ turn will increase the propeller speed by approx. 100 rpm. Secure nuts again.

NOTE: The max. static propeller speed on ground should be approx. 2240 rpm.

(11) Repeat steps (7) thru (10) until max. propeller speed is set up correctly.
(12) Safety wire check nuts on propeller hub.
(13) Re-install spinner and plates to spinner bulkhead (refer to 61-10).
(14) Start and warm up engine.
(15) Place power and propeller levers in full forward position for max. propeller speed.
(16) Slowly move propeller lever back until governor starts reducing propeller speed. Leave propeller lever in that position.
(17) Shut down engine after short cool down period.
(18) Adjust low pitch / high rpm stop screw on governor to current position of governor control arm. Safety wire stop screw.
(19) Push propeller lever full forward and pull slightly back again by approx. 2 mm (0.08 in.).
(20) Adjust governor control cable on governor control arm so that governor control arm touches the governor max. rpm control arm stop with the propeller lever in it's current position.
(21) Start and warm up engine.
(22) Adjust power lever for approx. 1700 rpm (propeller lever in max. rpm position).
(23) Pull back propeller lever until the propeller speed drops by 200 rpm.
(24) Pull back power lever in idle position.
(25) Adjust propeller lever low rpm stop screw to the current propeller lever position.
(26) Repeat steps (22) thru (25) until drop of propeller speed is 200 rpm.
(27) Perform a test-flight. At 130-140 kts with propeller and power levers full forward propeller speed should be max. 2260 rpm. Slowly move propeller lever forward. If popeller speed is max. 2260 rpm with propeller lever in full forward position governor adjustment is finished. If propeller speed would exceed the given value, mark the position of the propeller lever where propeller speed is 2260 rpm and continue with step (28).
(28) After landing move propeller lever to the position that has been marked during test-flight.
(29) Repeat steps (18) to (27) until max. propeller speed in flight is adjusted.

B. Functional Test

(1) Start and warm up engine.
(2) Adjust power lever for approx. 1700 rpm with propeller lever full forward. Pull propeller lever back to the low rpm stop. Propeller speed should drop by 200 rpm. Push propeller lever full forward and observe rpm increase. Decrease and increase of propeller speed should have about the same time. Cycle three times to bleed air out of the system.
(3) Adjust power lever at approx. 2200 rpm now. Pull propeller lever back until rpm drops about 100 rpm. When the rpm is stabilized, increase manifold pressure by about 3 in.Hg and observe the governor function. Propeller speed must stabilize.
(4) Watch for a clean ground surface to avoid blade damage and advance power lever and propeller lever for take-off power and rpm. The static rpm must be limited by the propeller and should be approx. 2240 rpm.
(5) Perform a test-flight. At 130-140 kts with propeller and power levers full forward propeller speed should be max. 2260 rpm.

# CHAPTER 71

# POWER PLANT

## TABLE OF CONTENTS


| Title | Chapter Section Subject | Page |
|---|---|---|
| POWER PLANT - GENERAL | 71-00-00 | 1 |
| Introduction | 71-00-00 | 1 |
| General Description | 71-00-00 | 1 |
| ENGINE - DESCRIPTION | 71-00-01 | 1 |
| Description and Operation | 71-00-01 | 1 |
| TROUBLESHOOTING - ROTAX® ENGINE 912S | 71-00-01 | 101 |
| General | 71-00-01 | 101 |
| Troubleshooting | 71-00-01 | 101 |
| ROTAX® ENGINE 912S - MAINTENANCE PRACTICES | 71-00-01 | 201 |
| General | 71-00-01 | 201 |
| Engine Removal/Installation | 71-00-01 | 201 |
| Engine Cleaning | 71-00-01 | 201 |
| Engine Storage | 71-00-01 | 201 |
| COWLING - MAINTENANCE PRACTICES | 71-10-00 | 201 |
| General | 71-10-00 | 201 |
| Cowling Removal/Installation | 71-10-00 | 201 |
| ENGINE MOUNT - MAINTENANCE PRACTICES | 71-20-00 | 201 |
| General | 71-20-00 | 201 |
| Maintenance Instructions | | |
| Engine Mount - Removal/Installation | 71-20-00 | 201 |
| AIR INDUCTION SYSTEM - MAINTENANCE PRACTICES | 71-60-00 | 201 |
| General | 71-60-00 | 201 |
| Maintenance Instructions | | |
| Induction Air Filter Change | 71-60-00 | 201 |

# POWER PLANT - GENERAL

1. Introduction

A. This chapter provides maintenance information on the power plant and associated components. Engine related information is limited to most important specifications. For further, more detailed information, refer to applicable ROTAX® Aircraft Engines publications.
For engine operation instructions use the Operator's Manual for ROTAX® 912 Engines.

2. General Description

A. The aircraft is powered by an air/liquid-cooled, four-cylinder, horizontally opposed engine with dry sump lubrication. The engine is a ROTAX® 912S engine and is rated at 73,5 kW (98,6 HP) at 5800 RPM.

The engine is mounted at four points on a steel tube construction via dynafocal mounts.

A variable pitch, two blade wood-composite propeller is driven via a reduction gear. The propeller has a governor, which controls the propeller pitch hydraulically.

For maintenance and repairs, the cowling, which consists of a upper and lower half can be removed.

## ENGINE - DESCRIPTION

1. Description and Operation

A. The AQUILA AT01 aircraft is powered by a ROTAX® 912S engine.
It is a four cylinder, horizontally opposed, spark ignition engine with dry sump forced lubrication. The cylinder heads are liquid cooled and the cylinders are ram air cooled. The propeller is driven via a reduction gear with integrated shock absorber and overload clutch.
The engine is equipped with 2 constant depression Bing carburetors and a dual breakerless capacitor discharge ignition.
A electric starter, a belt driven 40A-12V DC external alternator, a mechanical fuel pump, and a hydraulic constant speed propeller governor are mounted to the engine.
The cylinders are numbered from front to rear, odd numbers on the right, even numbers on the left. The right front cylinder is number 1, the left front cylinder is number 2, the right rear cylinder is number 3, and the left rear is number 4.

B. The most important technical data are contained in Table 1.

Table 1: ROTAX 912S Technical Data

| | |
|---|---|
| Certification | FAR 33 (TW9 - ACG) |
| Takeoff Performance (ISA) /MCP | 69 kW at 5500 RPM |
| Number of Cylinders | 4 |
| Bore, mm (in.) | 84 (3.31) |
| Stroke, mm (in.) | 61 (2.40) |
| Displacement, $cm^3$ ($in^3$) | 1352 (82.5) |
| Compression Ratio | 10,5:1 |
| Firing Order | 1-4-2-3 |
| Spark Occurs, degrees BTC | 26 |
| Direction of Rotation (looking at p.t.o. side) | Counterclockwise |
| Max. Oil Capacity, l (qts) | 3 (3.2) |
| Engine speed measurement | Electronically |
| Acceleration Limitation: 0 up to -0,5g | 5 sec. |
| Min. Oil Pressure below 3500 RPM, bar (psi) | 0,8 (12) |
| Norm. Oil Pressure above 3500 RPM, bar (psi) | 2,0 - 5,0 (29 - 73) |
| Max. Oil Temperature, °C (°F) | 130 (266) |
| Min. Oil Temperature, °C (°F) | 50 (120) |
| Norm. Operating Oil Temperature, °C (°F) | 90 - 110 (19 - 230) |
| Max. Cylinder Head Temperature, °C (°F) | 135 (284) |
| Weight - dry, without ext. Alt., kg (lbs) | 58,3 (128) |

C. Components
(1) Starter
The starter is mounted at the rear lower right side of the engine. It is a direct drive 12 V DC motor. While starting a pinion gear within the starter engages the crankshaft ring gear and

Intentionally left blank!

turns the engine over. When the engine reaches a predetermined speed, centrifugal action decouples the starter pinion from the crankshaft ring gear.

(2) Alternator
A 40-ampere, belt driven alternator is mounted on the forward left side of the engine. It powers the entire aircraft electrical load and charge the battery during normal system operation. The alternator contains the rectifier internally, which provides 12 VDC current.

(3) Ignition System
The engine is equipped with a breakerless capacitor discharge type dual ignition system, which operates independent from the aircraft electrical system. The ignition unit is completely free of maintenance.

(4) Carburetors
The Bing carburetors are constant compression carburetors comprising a cross-draught, butterfly-valve carburetor with variable choke tube. The carburetors equipped with a double-float system, and a rotary-valve type starting carburetor. The throttle slide is suspended from the roller diaphragm and projected into the venturi. This changes the smallest cross-section of the venturi as a function of the vacuum at this point. In this way the device provides an almost constant pressure drop and an almost constant velocity in the choke tube.

(5) Reduction Gear
The power plant incorporates a propeller gearbox to reduce the propeller speed in relation to the crankshaft speed. The reduction ratio between crankshaft and propeller is 2,43:1. To reduce torsional vibrations, the gearbox contains a torsional shock absorber. The shock absorbing is based on progressive torsional cushioning due to axial spring load acting on a dog hub.
Further the design incorporates a overload clutch. The friction damped free play at the dogs is necessary to achieve a smooth idling.
Due to this backlash at the dogs a distinct torsional impact arises during engine start, shut-down and at sudden load changes, but due to the built-in overload clutch it will remain harmless.
The overload clutch will also protect the crankshaft from undue load in case of ground contact of the propeller.

(6) Hydraulic Governor
The governor keeps the preselected propeller speed at a constant value, regardless of manifold pressure and airspeed. It is mounted to the propeller gear box.

D. For further, more detailed information, refer to applicable publications published by ROTAX® Aircraft Engines GmbH or other suppliers.
For information concerning external engine systems such as the cooling system or the oil system, refer to applicable chapters of this manual.

## TROUBLESHOOTING - ENGINE ROTAX® 912 S

1. General

A. The following chart lists some of the more common troubles, which may be encountered in maintaining engines, their probable causes and remedies.

2. Troubleshooting

A. Safety Precautions:
(1) Ensure before beginning troubleshooting on engine a fire extinguisher is available.
(2) Before rotating the propeller by hand, check the ignition switch is OFF, the throttle is closed, and the mixture control is in IDLE CUT-OFF position. Do not stand within the arc of the propeller blades while turning the propeller.
(3) Before attempting to start the engine, always ascertain the propeller area is clear of people.
(4) Residual oil and fuel draining from engine hoses and lines constitutes a fire hazard.

B. Troubleshooting Chart

| Trouble | Probable Cause | Remedy |
|---|---|---|
| Engine Will Not Start | Lack of fuel | Fill fuel tank.<br>Check fuel system for leaks.<br>Open fuel selector/shut-off valve.<br>Clean dirty lines and strainers. |
| | Defective spark plugs | Clean and adjust or replace spark plugs. |
| | Defective ignition wire | Check with electric tester, and replace any defective wires. |
| | Defective battery | Replace with charged battery. |
| | Improper operation of magneto breaker | Clean points. Check internal timing of magnetos. |
| | Water in carburetor | Drain carburetor and lines. |
| | Internal engine failure | Check oil screens for metal particles. If found, complete overhaul of the engine may be indicated. |
| Failure of Engine to Idle Properly | Incorrect idle mixture | Adjust mixture. |

| | | |
|---|---|---|
| | Leak in induction system | Tighten all connections in induction system. Replace any parts that are defective. |
| | Incorrect idle adjustment | Adjust throttle stop to obtain correct idle. |
| | Uneven cylinder Compression | Check condition of piston rings and valve seats. |
| | Faulty ignition system | Check entire ignition system. |
| | Insufficient fuel pressure | Adjust fuel pressure. |
| Low Power and Uneven Running | Mixture too rich indicated by sluggish operation, red exhaust flame at night. Extreme cases indicated by black smoke from exhaust. | Readjustment of carburetors by authorized personnel is indicated. |
| | Mixture too lean; indicated by over heating or backfiring. | Check fuel lines for dirt or other restrictions. Readjustment of carburetors by authorized personnel is indicated. |
| | Incorrect Carburetor synchronization | Perform carburetor mechnical or pneumatic synchronization. |
| | Leaks in induction system | Tighten all connections. Replace defective parts. |
| | Improper fuel | Fill tank with fuel of recommended grade. |
| | Defective spark plugs | Clean and gap or replace spark plugs. |
| | Defective spark plug terminal connectors | Replace connectors on spark plug wire. |
| | Defective ignition system | Inspect plug connections between electronic module and |

| | | |
|---|---|---|
| | | ignition coils for security, wear and corrosion. Check cables for damage, for ground contact and security. |
| Failure of Engine to Develop Full Power Power | Leak in induction system | Tighten all connections and replace defective parts. |
| | Throttle lever out of adjustment | Adjust throttle lever. |
| | Improper fuel flow flow | Check strainers, lines and flow at the fuel inlet. |
| | Restriction in air scoop | Examine air scoop and remove restrictions. |
| | Improper fuel | Drain and refill tank with recommended fuel. |
| | Incorrect Carburetor synchronization | Perform carburetor mechnical or pneumatic synchronization. |
| | Propeller or governor limit the engine speed | Refer to troubleshooting section in 61-00-00. |
| Rough Engine | Cracked engine mount | Replace or repair mount. |
| | Defective mounting bushings | Install new mounting bushings. |
| | Uneven compression | Check compression. |
| Low Oil Pressure | Insufficient oil | Fill to proper level with recommended oil. |
| | Air lock or dirt in pressure regulator | Inspect and clean oil pressure regulator. |
| | Leak in suction line or pressure line | Check for signs of leakage, Replace defective parts as required. |
| | High off temperature | See "High Oil Temperature" in "Trouble" column. |
| | Defective pressure gage | Replace. |

| | | |
|---|---|---|
| | Stoppage in oil pump intake passage | Check line for obstruction. Clean suction strainer. |
| High Oil Temperature | Insufficient air cooling | Check oil cooler for condition, deformation or obstruction. |
| | Insufficient oil supply | Fill to proper level with specified oil. |
| | Low grade of oil | Replace with oil conforming to specifications. |
| | Clogged oil lines or strainers | Remove and clean oil strainers. |
| | Excessive blow-by | Usually caused by worn or stuck rings. |
| | Failing or failed bearing | Examine oil filter for metal particles. If found, overhaul of engine is indicated. |
| | Defective temperature gage | Replace gage. |
| Excessive Oil Consumption | Low grade of oil | Fill tank with oil conforming to specifications. |
| | Failing or failed bearings | Check sump for metal particles. |
| | Worn piston rings | Install new rings. |
| | Incorrect installation of piston rings | Install new rings. |

## ROTAX® 912S - MAINTENANCE PRACTICES

1. General

A. This section provides instructions on engine removal and installation.
For information beyond the scope of this section, such as repair and overhaul of the engine or components, refer to applicable ROTAX® Aircraft Engines GmbH publications.

2. Engine Removal/Installation

A. Remove Engine

CAUTION: PLACE A SUITABLE TAIL STAND UNDER TAIL OF AIRCRAFT BEFORE REMOVING ENGINE.

PLUG OR CAP ALL OPENINGS, HOSE, AND LINES IMMEDIATELY AFTER DISCONNECTION TO PREVENT ENTRY OF FOREIGN MATERIAL.

(1) Place all electrical switches and the fuel selector valve in the cockpit in the OFF position.
(2) Disconnect positive and negative battery leads from battery.
(3) Remove engine cowling (refer to 71-10-00).
(4) Drain engine oil and coolant (refer to 75-10-00 and 79-10-00).
(5) Remove spinner and propeller (refer to 61-10-00).

NOTE: The following steps can be accomplished from the right side of the aircraft.

(6) Disconnect fuel return line at engine.
(7) Disconnect fuel pressure line at firewall.
(8) Disconnect manifold pressure line at engine.
(9) Disconnect waterline to overflow bottle at expansion tank.
(10) Disconnect Bowden cables at carburetor.
(11) Remove wiring harness from right side of engine.
  (a) Disconnect ground cable from engine.
  (b) Disconnect CHT sensor lead at sensor.
  (c) Disconnect oil temperature sensor lead at connector.
  (d) Disconnect electrical wire at oil pressure transmitter.
  (e) Disconnect electrical cables from alternator.
(12) Disconnect electrical cable to starter at starter relay.
(13) Disconnect electrical wires to RPM indicator at connector.
(14) Disconnect low fuel pressure switch lead at connector.
(15) Disconnect ground cables to ignition unit at connectors.
(16) Disconnect Bowden cable from flapper valves of the air distribution box.
(17) Disconnect oil return line from underside of the engine.
(18) Remove oil cooler / radiator from engine
  (a) Disconnect oil suction line at oil cooler.
  (b) Disconnect water line to the radiator at the expansion tank.
  (c) Disconnect oil suction line at oil pump.

NOTE: The following steps can be accomplished from the left side of the aircraft.

(d) Disconnect water line to radiator at water pump and remove oil cooler / radiator from aircraft.

(19) Remove exhaust assembly from aircraft (refer to 78-10-00).
(20) Disconnect Bowden cable at governor and at support.
(21) Disconnect Bowden cables at carburetor.
(22) Lift engine just enough to relief weight from engine mounts.
(23) Remove nuts, washers, and bolts securing engine to AQUILA engine mount.
(24) Remove engine from aircraft.

B. Install engine

NOTE: Remove all protective plugs or caps and labels as each component is installed.

(1) Hoist engine into alignment with AQUILA engine mount attach points.
(2) Assemble engine shock mounts.
(2) Install engine mount bolts, washers, and nuts (refer to 71-20-00). Torque to 25 Nm (221.2 in.lbs).

NOTE: The following steps can be accomplished from the left side of the aircraft.

(4) Connect Bowden cables at carburetor.
(5) Connect Bowden cable at governor and at support.
(6) Install exhaust assembly to engine (refer to 78-10-00).
(7) Install oil cooler / radiator to engine.
(a) Place oil cooler / radiator in position and connect water line to radiator at water pump.
(b) Connect oil suction line at oil pump.

NOTE: The following steps can be accomplished from the right side of the aircraft.

(c) Connect oil suction line at oil cooler.
(d) Connect water line to the radiator at the expansion tank.

(8) Connect oil return line to engine.
(9) Connect Bowden cable to flapper valves of the air distribution box.
(10) Connect ground cables to ignition unit at connectors.
(11) Connect low fuel pressure switch lead at connector.
(12) Connect RPM indicator leads at connector.
(13) Connect electrical cable to starter at starter relay.
(14) Install wiring harness to right side of engine.
(a) Connect electrical cables to alternator.
(b) Connect electrical wire to oil pressure transmitter.
(c) Connect oil temperature sensor lead at connector.
(d) Connect CHT sensor lead at sensor.
(e) Connect ground cable to engine.

(15) Connect Bowden cables at carburetor.
(16) Connect waterline to overflow bottle at expansion tank.
(17) Connect manifold pressure line at engine.
(18) Connect fuel pressure line at firewall.
(19) Connect fuel return line at engine.
(20) Install spinner and propeller (refer to 61-10-00).

(21) Replenish engine oil and coolant (refer to 75-10-00 and 79-10-00).
(22) Connect positive and negative battery leads to battery.
(23) Place fuel selector valve to desired tank.
(24) Perform operational check (refer to 05-20-00).
(25) Perform visual check for signs of leakage.
(26) Install engine cowling (refer to 71-10-00).

2. Engine Cleaning

A. For engine cleaning procedures, refer to 12-23-00.

3. Engine Storage

A. If the engine is being removed for storage purposes, it should be preserved. The ROTAX® 912 series engines Operator's Manual, Section 11, contains information on preservation techniques.

## COWLING - MAINTENANCE PRACTICES

1. General

A. The AQUILA A210 engine cowling, fabricated from laminated fiberglass, consists of one upper and lower half.
The oil access door is located on the right side of the upper cowling. An air intake and the induction air filter housing are placed on the lower cowling left side.
Both cowling halves are fixed to fuselage, and among one another with CAMLOC quick-release fastener. That allows their fast removal during necessary maintenance at the engine.
The engine cowling is equipped with a specific fire proofing finish on the inside.

2. Engine Cowling Removal/Installation

A. Remove Engine Cowling

WARNING: DO NOT REMOVE COWLING IF ENGINE RUNS.

IF ENGINE WAS RUNNING RECENTLY, HOT ENGINE COMPONENTS MAY CAUSE SKIN BURNS!

(1) Close Canopy.

CAUTION: DO NOT ROTATE THE PROPELLER CLOCKWISE.

(2) Rotate propeller to horizontal position.
(3) Release CAMLOC quick-release fasteners securing upper cowl to lower cowl.
(4) Release CAMLOC quick-release fasteners securing upper cowl to fuselage.
(5) Remove upper cowl from aircraft.
(6) Remove flexible air hose from induction air filter housing.
(7) Remove flexible air hose from cylinder air cooling intake.
(8) Release CAMLOC fasteners securing radiator and oil cooler to lower cowl.
(9) Disconnect electrical cable to landing light at connector.
(10) Release CAMLOC quick-release fasteners securing close-out plate to bottom of lower cowl and remove close-out plate from aircraft.

CAUTION: TWO PEOPLE ARE REQUIRED WHEN REMOVING OR INSTALLING LOWER ENGINE COWLING TO PREVENT DAMAGING THE COWLING DUE TO BENDING, SCRATCHING, OR FALLING DOWN.

(10) Release CAMLOC quick-release fasteners securing lower cowl to fuselage.
(11) Remove lower cowl from aircraft.

B. Install Cowling
(1) Position lower cowl in place and fasten to fuselage with CAMLOC quick-release fasteners.
(2) Position close-out plate to bottom of lower cowl and secure with CAMLOC quick-release fasteners.

(3) Install flexible air hose to cylinder air cooling intake.
(4) Connect electrical cable to landing light at connector.
(5) Fasten radiator and oil cooler to lower cowl with CAMLOC quick-release fasteners.
(6) Install flexible air hose to induction air filter housing and secure using clamp.
(7) Place upper cowl in position and secure to lower cowl and fuselage with CAMLOC quick-release fasteners.

## ENGINE MOUNT - MAINTENANCE PRACTICES

1. General

A. The engine is elastically attached to the aircraft by means of an engine mount, which is equipped with vibration dampers. The engine mount consists of welded steel tubes and is fastened to the fuselage at four points on the firewall by steel bolts. The vibration dampers isolates engine noise and vibration from the airframe.

B. This section is applicable to the engine mount made by AQUILA GmbH.

2. Maintenance Instructions

A. If engine is removed, the components of vibration dampers should be inspected for condition. Metal components should be examined for cracks and excessive wear due to aging and deterioration. Rubber components should be inspected for separation, swelling, cracking or a pronounced set of the pad. Vibration dampers showing such or other signs of aging must be replaced.

B. Vibration dampers should never be cleaned with any type of solvent. If they need cleaning, use a clean, dry cloth.

3. Engine Mount Removal/Installation

A. Remove Engine Mount
(1) Remove engine (refer to 71-00-01).
(2) Remove battery from aircraft (refer to 24-30-00).
(3) Remove master relay, starter relay and electrical connectors secured to the engine mount from engine mount.
(4) Disconnect all ground cables from engine mount.
(5) Remove oil tank from aircraft (refer to 79-10-00).
(6) Remove overflow bottle from aircraft (refer to 75-10-00).
(7) Disconnect pushrods of the nose gear steering assembly from nose gear strut.
(8) Remove bolt securing governor Bowden cable support clamp to engine mount and remove support clamp.
(9) Remove bolts securing engine mount to aircraft structure and remove engine mount.

B. Install Engine Mount
(1) Align engine mount with mounting points on firewall.
(2) Install engine mount to firewall using bolts, torque to 30 Nm (265.5 In.lb).
(3) Install governor Bowden cable support clamp to engine mount using bolt and nut.
(4) Connect pushrods of the nose gear steering assembly to nose gear strut.
(5) Install overflow bottle to engine mount (refer to 75-10-00).
(6) Install oil tank to engine mount (refer to 79-10-00).
(7) Reconnect all ground cables to engine mount.

## AIR INDUCTION SYSTEM - MAINTENANCE PRACTICES

1. General

A. Induction air enters the carburetors through the air intake, the induction air filter, the air distribution box as well as flexible ducts. The air intake and the induction air filter housing are placed on the lower cowling left side. The air distribution box is of welded aluminum design and is located on top of the engine. To the air distribution box is a second duct connected, which is open close to the engine exhaust muffler.

B. The air distribution box comprises two coupled flap valves. Those valves are manually controlled from the cabin by pulling the "Carburetor Heat" control knob. The valves stop the airflow from the air intake, and allow heated alternate air from the exhaust muffler area to flow to the carburetors.

2. Maintenance Instructions

A. Induction Air Filter
For induction air filter servicing, refer to 12-13-00.

B. Flap Valves
Always ensure one flap is closed the other is fully open.
(a) Adjust the correct position of the valve flaps to each other by changing the length of the linkage bar between the two flap valve control arms.
(b) Adjust bowden cable so that with the "Carburetor Heat" knob pushed in, the carburetor heat valve fully closes.

# CHAPTER 74

# IGNITION SYSTEM

## TABLE OF CONTENTS


| Title | Chapter Section Subject | Page |
|---|---|---|
| IGNITION SYSTEM - GENERAL | 74-00-00 | 1 |
| Introduction | 74-00-00 | 1 |
| General Description | 74-00-00 | 1 |
| IGNITION SYSTEM - MAINTENANCE | 74-00-00 | 201 |
| General | 74-00-00 | 201 |
| SMD-Electronic Module Removal/Installation | 74-00-00 | 201 |
| Double Ignition Coil Assembly Removal/Installation | 74-00-00 | 201 |
| Spark Plug Removal/Installation | 74-00-00 | 202 |
| Inspection/Check | 74-00-00 | 202 |

# IGNITION SYSTEM - GENERAL

1. Introduction

   A. This chapter describes those units and components which generate, distribute and control an electrical current to ignite the fuel air mixture in the engine cylinders.

2. General Description

   A. The engine is equipped with a breakerless dual ignition system (DCDI - Dual Capacitor Discharge Ignition). The ignition unit is completely maintenance-free and needs no external power supply.

   Refer to figure 1 for an schematic circuit diagram of the ignition system. Each of the two independent charging coils (1) located on the generator stator supplies one of the two ignition circuits. The energy is stored in capacitors of the electronic modules (2). At the moment of ignition 2 of the 4 external trigger coils (3) actuate the discharge of the capacitors via the primary circuit of the dual ignition transformers (4). The 5th trigger coil (5) is provided for the rev counter signal.

   A combined, rotary-type switch, mounted on the instrument panel right side in the row of switches below the flight instruments, controls ignition system and starter operation. It has the positions OFF, R, L, BOTH and START. With the switch OFF, the charging coils are grounded and will not supply capacitors with current. During normal engine operation, the switch is in the BOTH position. It is switched to L or R only to check the ignition circuits or if one ignition circuit is not working properly. To start the engine, the switch should be rotated to the right into the spring-loaded START position, activating the starter (if ALT/BAT is ON). When the switch is released, it will automatically return to the BOTH position.

## IGNITION SYSTEM

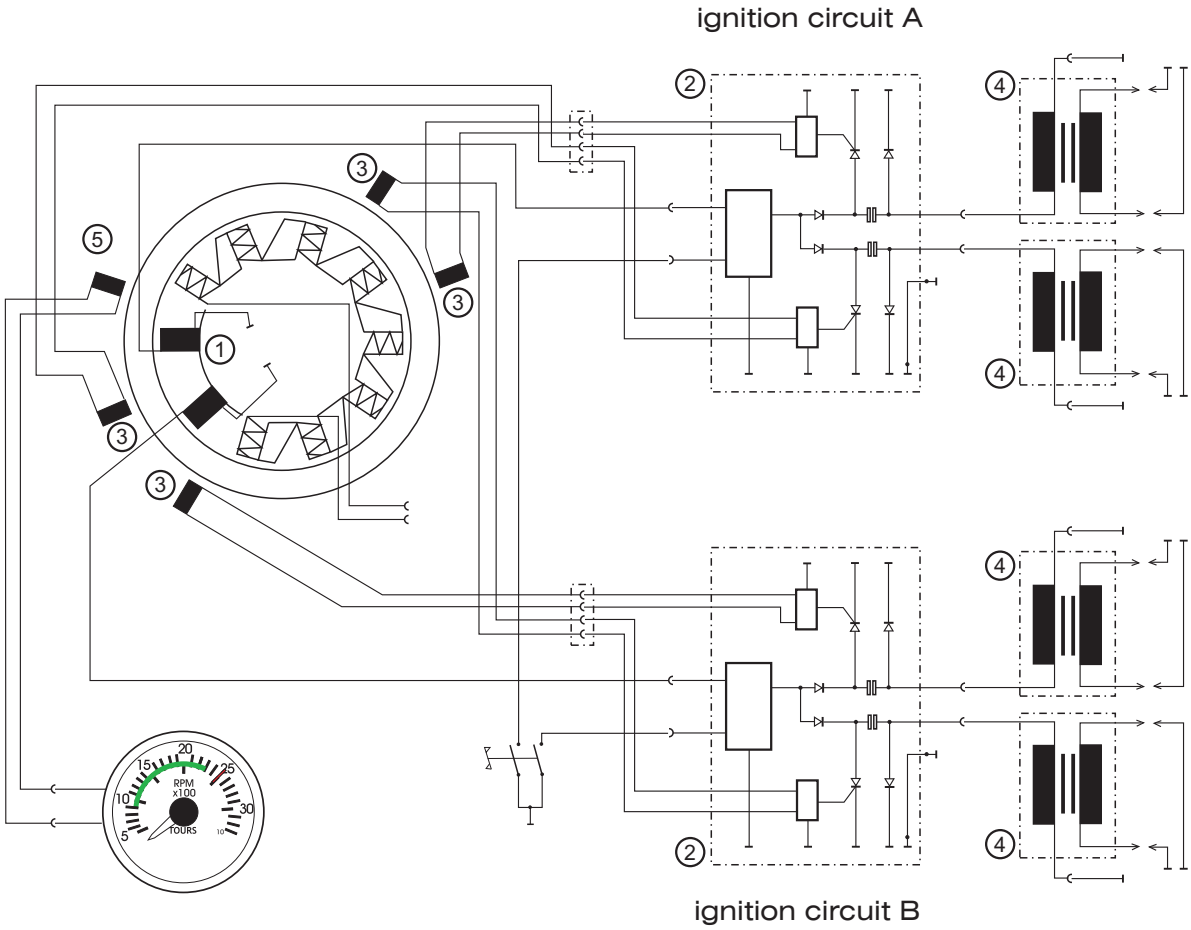


Ignition System Electrical Schematic
Figure 1

## IGNITION SYSTEM - MAINTENANCE

1. General

A. Maintenance of the ignition system is limited to the removal and installation of components. Information on verification and renewal of spark plugs is also provided.

B. For information beyond the scope of this section pertaining to the ignition system, refer to the maintenance manual for ROTAX® Engine Type 912 Series.

C. For inspection time requirements of the ignition system components, refer to 05-20-00.

2. SMD-Electronic Module Removal/Installation

A. Remove SMD-Electronic Module
(1) Remove upper engine cowling (refer to 71-10-00).
(2) Remove battery from aircraft (refer to 24-30-00).
(3) Disconnect electrical connections to electronic module.
(4) Remove machine screws, lock washer and washers securing electronic module, cable clamp, and ground cable terminal to engine.
(5) Remove electronic module from engine.

B. Install SMD-Electronic Module
(1) Put electronic module, cable clamp and ground cable terminal in position and secure to the engine using lock washer, washers and screws.
(2) Connect electrical connections to electronic module.
(3) Install battery (refer to 24-30-00).
(4) Install upper engine cowling (refer to 71-10-00).

3. Double Ignition Coil Assembly Removal/Installation

A. Remove Double Ignition Coil Assembly
(1) Remove upper engine cowling (refer to 71-10-00).
(2) Remove battery from aircraft (refer to 24-30-00).
(3) Remove clamps and cable ties securing ignition cables to engine.
(4) Remove spark plug connectors from spark plugs.
(5) Remove machine screws, bolts, nuts, lock washers and washers securing coil assembly to engine.
(6) Remove coil assembly.

B. Install Double Ignition Coil Assembly
(1) Install coil assembly to engine using machine screws, bolts, nuts, lock washers and washers. Ensure correct position of the hardware.
(2) Route ignition cables to the appropriate spark plug position.

NOTE: There are yellow marking sleeves on the cables.

(3) Install spark plug connectors to spark plugs.
(4) Install clamps and cable ties securing ignition cables to engine.
(5) Install battery (refer to 24-30-00).
(6) Install engine cowling (refer to 71-10-00).

4. Spark Plug Removal/Installation

A. Remove Spark Plug
(1) Remove engine cowling (refer to 71-10-00).
(2) Disconnect battery (refer to 24-30-00).
(3) Remove resistor spark plug connector from spark plug.

CAUTION: COVER SPARK PLUG HOLE TO PREVENT ENTRY OF FOREIGN MATERIALS.

(4) Unscrew spark plug and remove from engine.

B. Install Spark Plug

NOTE: New spark plugs and spark plug connectors have been introduced by Rotax. Refer to Rotax SI-912-027 for further information.

(1) Clean spark plug as required.
(2) Apply a small amount of heat conduction compound to spark plug thread.
(3) Install spark plug to engine. Torque old plug type to 20 Nm (177 in.lbs) / new plug type to 16 Nm (142 in.lbs) on the cold engine.
(4) Install spark plug connector to spark plug.
(5) Reconnect battery (refer to 24-30-00).
(6) Install engine cowling (refer to 71-10-00).

5. Inspection/Check

A. Spark Plugs

NOTE: Always renew both spark plugs of a cylinder and do not interchange spark plugs between cylinders.

NOTE: Mixing of spark plug types and spark plug connector types is NOT allowed.
All spark plugs and spark plug connectors must be of the same part number for the entire engine.

(1) Mark position of the spark plugs (e.g. cyl. 1 top) and remove spark plugs as described above.
(2) Inspect the spark plugs for damage (melt beads, burn off). Renew spark plug if required.
(3) Inspect spark plug thread for damage (especially at burn off). Renew spark plug if required.
(4) Inspect plug face appearance (refer to table 1).
(5) Inspect spark plug electrode gap. Renew spark plug if required.

NOTE: New spark plug type: Due to the curved gap between the center electrode and the ground electrodes, it is suggested to use a wire type feeler gauge for accurate gap measurement. Refer to Rotax SI-912-027.

NOTE: Spark plugs are already gapped upon delivery. No adjustment of the gap is necessary nor allowed.

| Spark plug | Electrode gap: New | Wear limit |
|---|---|---|
| Old type (P/N 297940) | 0,6 mm - 0,7 mm<br>0.024 in - 0.028 in. | 0,9 mm<br>0.035 in. |
| New type (P/N 297656) | 0,8 mm - 0,9 mm<br>0.031 in. - 0.035 in. | 1,1 mm<br>0.043 in. |

(6) Install spark plugs to engine as described above. Ensure the correct type of spark plug is used.

Table 1: Spark Plug Face Appearance and Causes

| Face appearance | Indicates the following: |
|---|---|
| Light colored to brown: | Plug and calibration are correct. |
| Velvet black: | - Mixture too rich;<br>- Insufficient air intake (clogged air filter);<br>- Operating temperature too low; |
| Oily, glossy coating: | - Misfiring;<br>- Too much oil in combustion chamber;<br>- Worn cylinder and piston rings; |
| White with melt droplets: | - Mixture too lean;<br>- Leaking valves; |

B. Ignition System Wiring
(1) Check all cable connectors for tight fit and good contact.
(2) Inspect all ground connections for corrosion and security. Repair as required. Check plug connections between pick-up cable, electronic module, charging and shorting cables for corrosion and security. Repair as required.
(3) Check plug connections between electronic module and ignition coils for security, wear and corrosion.
(4) Check grounding cables for tight fit and corrosion. Repair as required.
(5) Verify shielding of cable assemblies for damage, ground contact and security.
(6) Inspect all eight ignition cables to spark plug connector for damage and tight fit. Check resistor plug connector for tight fit on spark plug. Repair or replace as necessary.

# CHAPTER 75

# COOLING SYSTEM

## TABLE OF CONTENTS


| Title | Chapter Section Subject | Page | Effectivity |
|---|---|---|---|
| COOLING SYSTEM - GENERAL | 75-00-00 | 1 | |
| Introduction | 75-00-00 | 1 | |
| General Description | 75-00-00 | 1 | |
| COOLING SYSTEM - MAINTENANCE | 75-00-00 | 201 | |
| General | 75-00-00 | 201 | |
| Radiator Removal/Installation | 75-00-00 | 201 | |
| Overflow Bottle Removal/Installation | 75-00-00 | 202 | |
| Expansion Tank Removal/Installation | 75-00-00 | 202 | |
| Inspection/Check | 75-00-00 | 202 | |
| WINTERIZATION KIT - MAINTENANCE | 75-00-01 | 201 | Winter. Kit |
| General | 75-00-01 | 201 | Winter. Kit |
| Air Inlet Cover Removal/Installation | 75-00-01 | 202 | Winter. Kit |
| Inspection/Check | 75-00-01 | 202 | Winter. Kit |

## COOLING SYSTEM - GENERAL

1. Introduction

   A. This chapter covers those units and components which are used for liquid cooling of the cylinder heads and are not part of the engine.
   For additional information on the internal engine cooling system components, refer to the respective engine manufacturer's publications.

   B. For cooling system servicing, such as replenishing or flushing, refer to 12-14-00.

2. General Description

   A. The cooling system of the engine is designed for liquid cooling of the cylinder heads and ram air cooling of the cylinders. The cooling system of the cylinder heads is a closed circuit with an expansion tank.

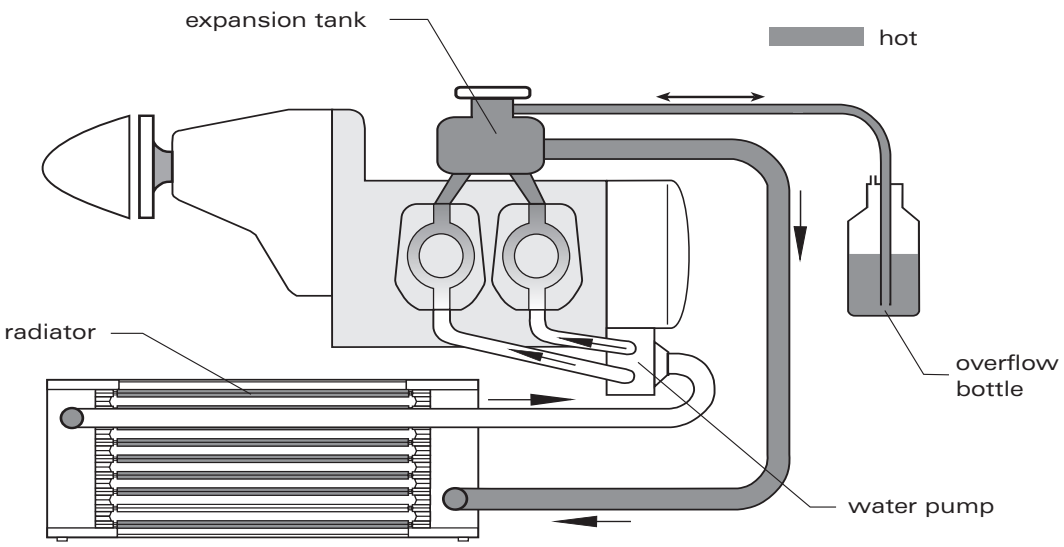


Engine Cooling System (Schematic)
Figure 1

B. The coolant flow is forced by a camshaft driven water pump from the radiator to the cylinder heads. The coolant passes from the top of the cylinder heads on to the expansion tank. Since the radiator is installed below engine level, the expansion tank located on top of the engine allows for coolant expansion.

The expansion tank is closed by a pressure cap (with excess pressure valve and return valve). As coolant temperature rises, the excess pressure valve opens and the coolant will flow through the hose at atmospheric pressure to the transparent overflow bottle. When coolant temperature drops, the coolant will be sucked back into the cooling circuit. Coolant temperature is measured by a temperature sensor installed in cylinder head 3.

C. Optional winterization kits are provided for cold weather operations. Refer to 75-00-01.

## COOLING SYSTEM - MAINTENANCE

1. General

WARNING: NEVER OPEN RADIATOR, EXPANSION TANK OR OVERFLOW BOTTLE CAP WHEN THE COOLING SYSTEM IS STILL HOT! FOR REASONS OF SAFETY, COVER CAP WITH A CLOTH AND OPEN SLOWLY. SUDDEN OPENING OF THE CAP WOULD PROVOKE EXIT OF BOILING COOLANT AND RESULT IN SEVERE SCALDS.

CAUTION: IF ENGINE WAS RUNNING RECENTLY, HOT ENGINE COMPONENTS MAY CAUSE SKIN BURNS!

A. Maintenance of the engine cooling system is limited to removal and installation of components. Inspection procedures for the cooling system are also provided.

B. There are two types of cooling systems in use:
- Type 1: Standard cooling system of the AQUILA AT01 with a combined oil / water radiator and waterless coolant.
- Type 2: A retrofit cooling system with separate oil and water radiators and conventional coolant based on water and ethylene glycol. Refer to SB-AT01-029 for further information on upgrading to this type of cooling system.

C. For information beyond the scope of this section pertaining to the engine cooling system, refer to the respective engine manufacturer's publications.

D. For inspection time requirements of the cooling system components, refer to 05-20-00.

E. Use only coolant in accordance to 12-14-00.

2. Radiator Removal/Installation

A. Remove Radiator
(1) Remove engine cowling (refer to 71-10-00).
(2) When engine is cold, open pressure cap of the expansion tank and lowest coolant hose on the radiator and drain the coolant.
(3) Disconnect remaining hose at radiator.
(4) Disconnect inlet and outlet hoses at oil cooler (cooling system type 1 only).
Remove bolts securing radiator to mounting plate (cooling system type 2 only).
(5) Remove radiator from aircraft.

B. Install Radiator
(1) Connect inlet and outlet hoses at oil cooler (cooling system type 1 only).
Secure radiator to mounting plate using bolts, washers and spacers (cooling system type 2 only).
(2) Connect inlet and outlet hoses at radiator.
(3) Replenish engine coolant as required (refer to 12-14-00).

(4) Replenish engine oil as required (cooling system type 1 only). Refer to Rotax SI-912-018 for purging of the lubrication system.
(5) Install engine cowling (refer to 71-10-00).
(6) Perform an engine run and check oil cooler / radiator and connections for leaks.

3. Overflow Bottle Removal/Installation

A. Remove Overflow Bottle
(1) Remove engine cowling (refer to 71-10-00).
(2) Disconnect hose at overflow bottle.
(3) Open clamps securing overflow bottle to bracket and remove overflow bottle from aircraft.

B. Install Overflow Bottle
(1) Place overflow bottle on bracket. Ensure the correct position of the protection rubbers.
(2) Secure overflow bottle to bracket with clamps.
(3) Connect hose at overflow bottle.
(4) Install engine cowling (refer to 71-10-00).

4. Expansion Tank Removal/Installation

A. Remove Expansion Tank
(1) Remove engine cowling (refer to 71-10-00).
(2) Drain coolant as required either at water pump or radiator.
(3) Remove all hoses connected to expansion tank.
(4) Remove expansion tank from engine.

B. Install Expansion Tank
(1) Position expansion tank on engine.
(2) Connect all hoses to expansion tank.
(3) Replenish coolant as required (refer to 12-14-00).
(4) Install engine cowling (refer to 71-10-00).

5. Inspection/Check

A. Engine Cooling System
(1) Inspect all coolant hoses for damage through heat, cracking, wear and evidence of leaking.
(2) Check all connections on cylinder head top- and bottom sides and on the water pump.
(3) Check expansion tank for damages. Check protection rubber at bottom of the tank for tight fit.
(4) Check gasket of radiator cover as well as the pressure control valve and return valve. The pressure control valve opens at 1,2 bar (17.4 psi).
(5) Check coolant with densimeter or glycol tester (cooling system type 2 only). If necessary, replenish with coolant of same composition. Badly discolored or thick coolant must be renewed.

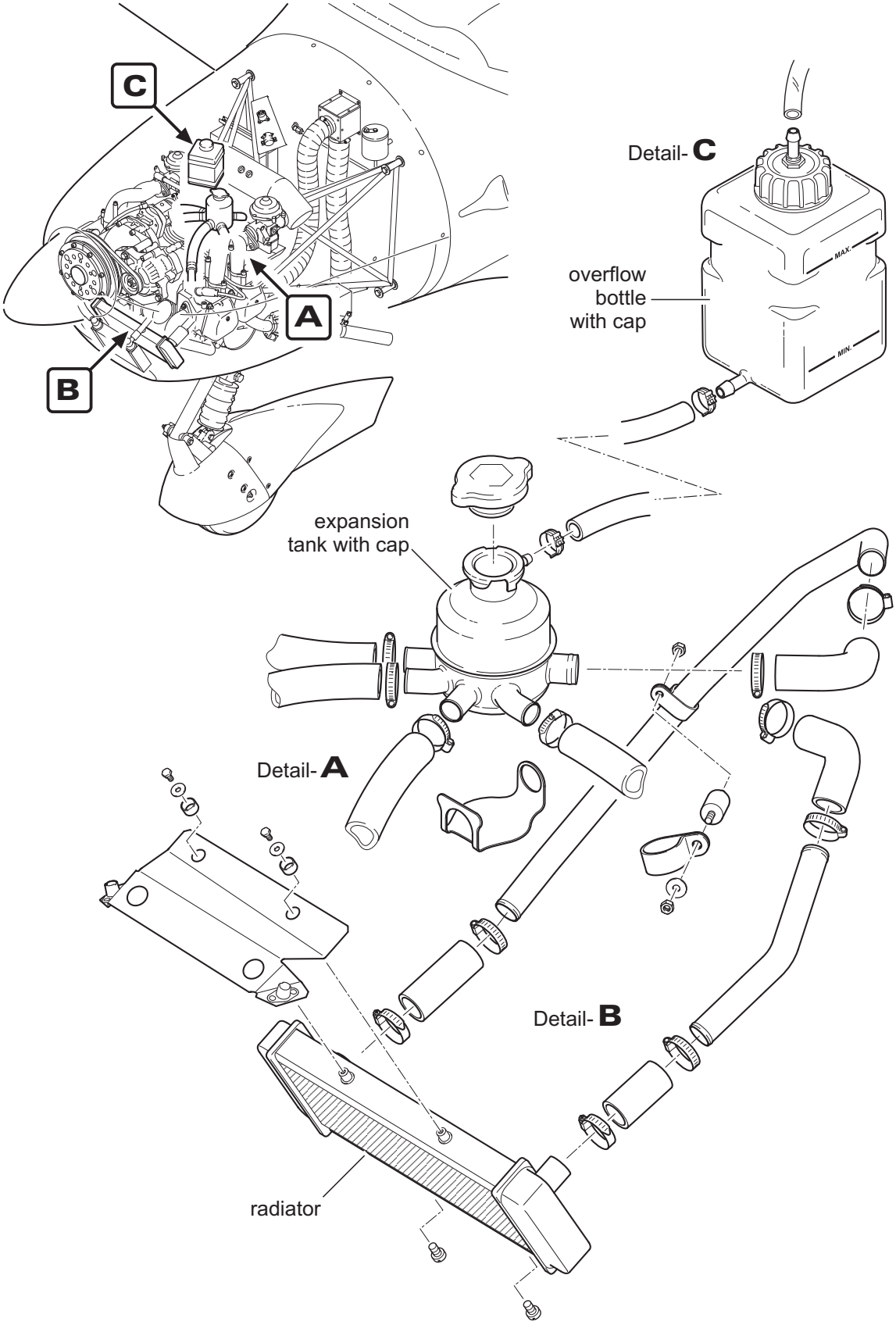


**EFFECTIVITY**

Aircraft equipped with retrofit cooling system
(type 2 / SB-AT01-029)

## WINTERIZATION KIT - MAINTENANCE

1. General

A. Optional winter kits are supplied for use in cold weather operations.

The kits include a special air inlet cover with fasteners, a placard (refer to 11-20-00) and the appropriate AFM supplement. The cover should be fitted in front of the oil and coolant radiators as shown in figure 201. This restricts the airflow entering the engine compartment for cooling and provides faster and adequate heating of the engine oil and coolant in cold weather conditions.

CAUTION: THE MAXIMUM PERMISSIBLE OUTSIDE AIR TEMPERATURE TO PERFORM TAKE-OFF WITH INSTALLED AIR INLET COVER IS GIVEN IN THE AFM SUPPLEMENT AND ON THE PLACARD FOR THE RESPECTIVE COVER AND MUST NOT BE EXCEEDED.

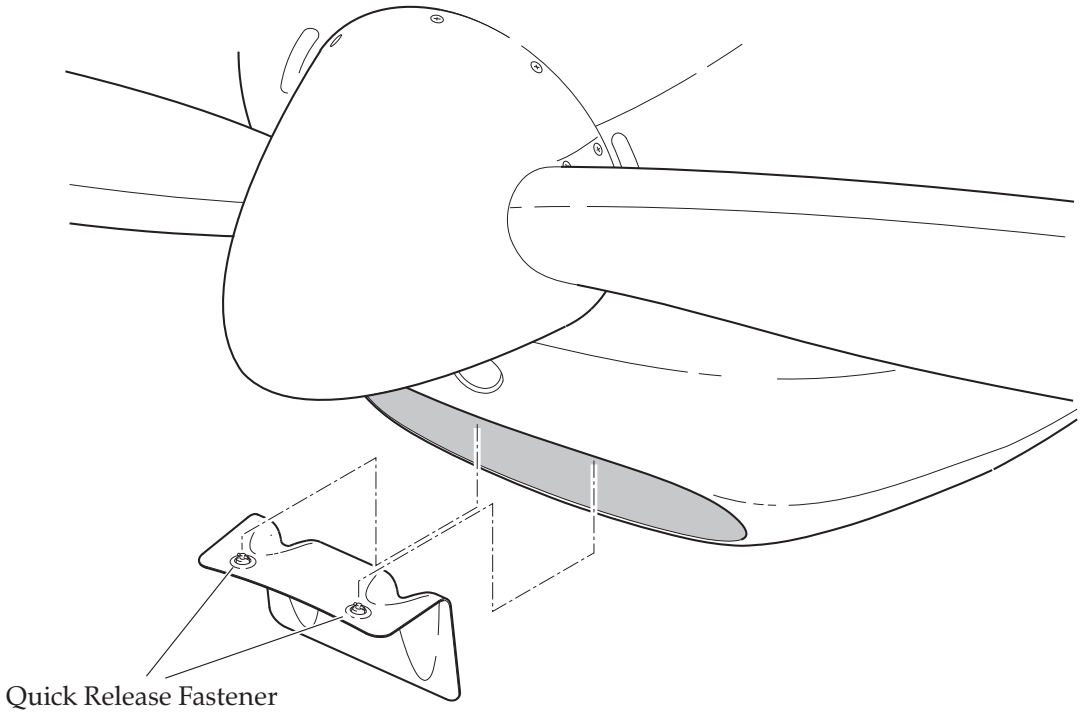


Air Inlet Cover Installation
Figure 201

2. Air Inlet Cover Removal/Installation

   A. Install air inlet cover as shown in figure 201. If there is no placard directly on the air inlet cover, the placard should be glued on the engine cowling front side just below the landing light.

3. Inspection/Check

   A. Perform the following checks if the air inlet cover is installed.
      (1) Verify the cover is fastened correctly (both quick release fasteners are closed).
      (2) Check the placard delivered with the winterization kit is firmly in place, not damaged and readable.

# CHAPTER 76

# ENGINE CONTROLS

## TABLE OF CONTENTS


| Title | Chapter Section Subject | Page | Effectifity |
|---|---|---|---|
| ENGINE CONTROLS - GENERAL | 76-00-00 | 1 | |
| Introduction | 76-00-00 | 1 | |
| General Description | 76-00-00 | 1 | |
| ENGINE CONTROLS - MAINTENANCE | 76-00-00 | 201 | |
| General | 76-00-00 | 201 | |
| Control Quadrant Disassembly/Assembly | 76-00-00 | 201 | |
| Throttle Control Cable Removal/Installation | 76-00-00 | 201 | |
| Governor Control Cable Removal/Installation | 76-00-00 | 204 | |
| Choke Control Adjustment/Test | 76-00-00 | 204 | |
| Throttle Control Adjustment/Test | 76-00-00 | 205 | |

# ENGINE CONTROLS - GENERAL

1. Introduction

A. This chapter describes and provides maintenance instructions for components and systems used to control the engine.

2. General Description

A. Engine controls include throttle, choke, propeller and carburetor heat. The primary engine controls, the throttle and propeller controls, employ conventional push-pull type levers and are connected to a control quadrant mounted on the center console. The push-pull type choke and carburetor heat control knobs are to be found in the center console, below the instrument panel.

Throttle Control
The throttle control lever is connected via Bowden cables with the throttle actuation arm on each carburetor. The Bowden cable jackets are attached at both ends to a support bracket which is adjustable on the carburetor side.

Propeller Control
Movement of the propeller speed control lever is transferred to the propeller governor control arm via a Bowden cable. The Bowden cable is adjustable on the propeller governor.

Choke
The choke control knob is connected via Bowden cables to the choke actuation lever on each carburetor.

Carburetor Heat
By pulling the carburetor heat control knob, two coupled flap valves in the air distribution box are operated. The valves stop airflow from the air intake and allow heated alternate air from the exhaust muffler area to flow to the carburetors. Movement of the carburetor heat knob is transferred to the flap valves through a Bowden cable.

## ENGINE CONTROLS - MAINTENANCE

1. General

   A. For propeller speed control adjustment/test procedures, refer to 61-20-00.

   B. For carburetor heat control adjustment/test procedures, refer to 71-60-00.

2. Control Quadrant Disassembly/Assembly

   A. For control quadrant disassembly/assembly, refer to figure 201.

3. Throttle Control Cable Removal/Installation

   WARNING: WHEN THE THROTTLE CONTROL CABLES ARE NOT CONNECTED, THE CARBURETORS ARE IN FULL OPEN POSITION. NEVER START ENGINE WHEN THE CARBURETOR THROTTLE CONTROL CABLES ARE NOT CONNECTED.

   A. Remove Throttle Control Cables
      (1) Remove engine cowling (refer to 71-10-00).
      (2) Remove access panels 211 FT, 211 FB, 211 EC (refer to 25-12-00) in the cabin.
      (3) Disconnect throttle control cables from carburetors.
      (4) Disconnect throttle control cables at throttle control lever.
      (5) Carefully pull throttle control cables through firewall and control cable support bracket, and remove from aircraft.

   B. Install Throttle Control Cables

      NOTE: When installing throttle control cables, ensure the cables are routed exactly as previously installed.

      Before installing, ensure cable fitting on firewall is clear and free of sealant.

      (1) Route throttle cables from the cabin, through control cable support bracket and then through the firewall to the engine compartment.
      (2) Install washers and nuts securing control cables to cable support bracket at the console.
      (3) Secure control cables to support brackets at carburetors and connect to carburetor throttle control arm using hardware in the engine compartment.
      (4) With throttle control lever in full forward position, connect control cables to the throttle control lever in the cabin as shown in figure 201.
      (5) Perform throttle control cable adjustment/test (refer to “Throttle Control Adjustment/Test” below).
      (6) Fill firewall seal fitting with silicone sealant.
      (7) Install all items removed for access.

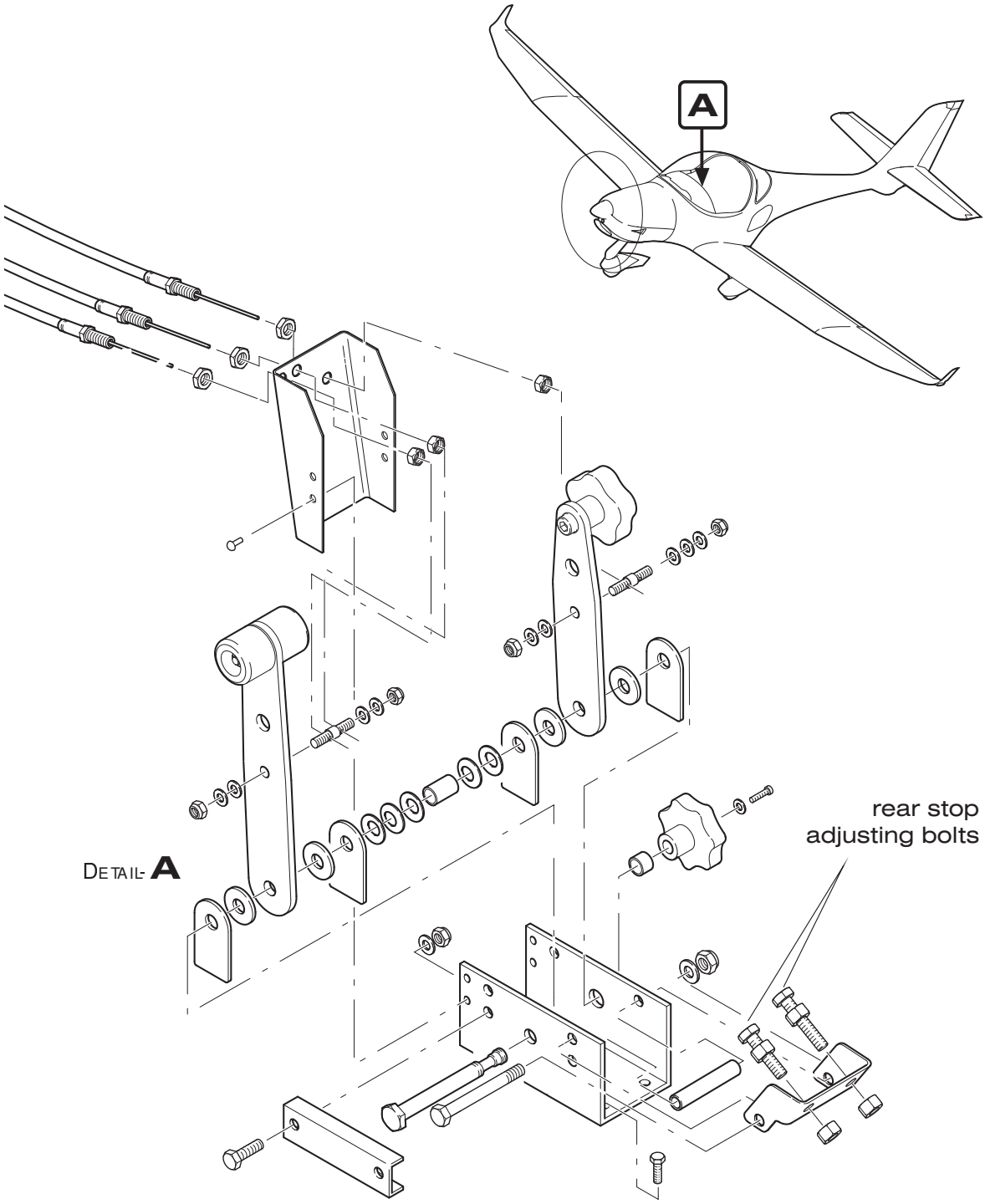


Control Quadrant Assembly
Figure 201

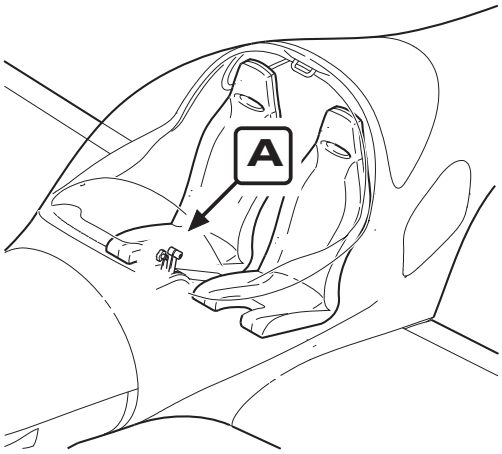


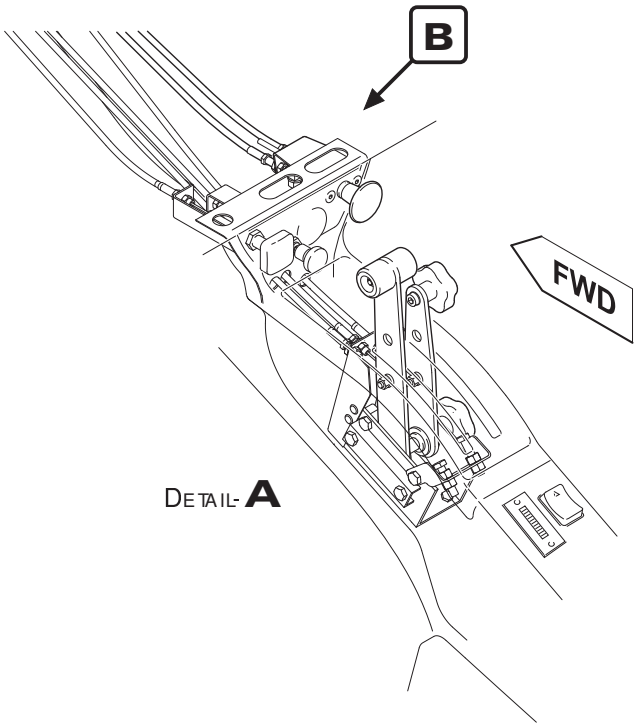


DETAIL- **A**

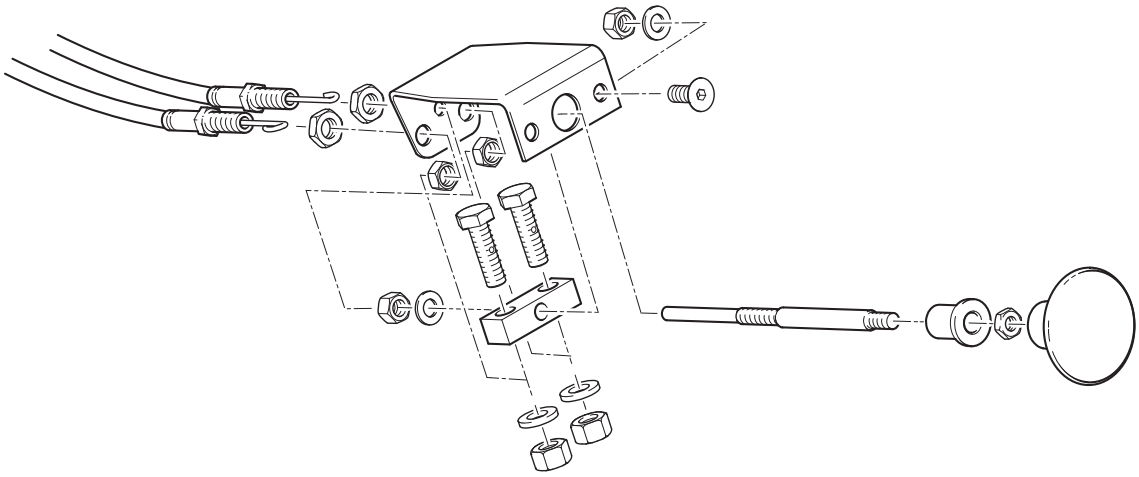

DETAIL- **B**

Choke Control Assembly
Figure 202

4. Governor Control Cable Removal/Installation

A. Remove Governor Control Cable
(1) Remove engine cowling (refer to 71-10-00).
(2) Remove access panels 211 FT, 211 FB, 211 EC (refer to 25-12-00) in the cabin.
(3) Disconnect governor control cable from governor control arm.
(4) Remove any clamps or ties securing governor cable to engine or engine mount.
(5) Disconnect governor control cable at propeller control lever.
(6) Carefully pull governor control cable through firewall and control cable support bracket, and remove from aircraft.

B. Install Governor Control Cables

NOTE: When installing throttle control cables, ensure the cables are routed exactly as previously installed.

Before installing, ensure cable fitting on firewall is clear and free of sealant.

(1) Route governor cable from the cabin, through control cable support bracket and then through the firewall to the engine compartment.
(2) Install washers and nuts securing control cable to cable support bracket at the console.
(3) Install governor control cable to governor control arm using hardware at the governor in the engine compartment.
(4) Connect control cable to the propeller control lever in the cabin as shown in figure 201.
(5) Re-install clamps or ties securing governor cable to engine or engine mount.
(6) Perform governor control adjustment/test (refer to 61-20-00).
(7) Fill firewall seal fitting with silicone sealant.
(8) Install all items removed for access.

5. Choke Control Adjustment/Test

A. Adjust Choke Control
(1) Adjust control cables so, if the choke control knob is in the full forward position, the starting carburetor control arms on both carburetors reach their low stop.

6. Throttle Control Adjustment/Test

A. Idle Speed Adjustment

NOTE: Always perform idle speed adjustment at operating temperature of the engine.

(1) Close idle mixture control screw by turning clockwise.
(2) Open idle mixture control screw again 1.5 turns counterclockwise.

NOTE: Turning idle mixture control screw in clockwise direction results in a leaner mixture and turning counterclockwise in a richer mixture.
If no satisfactory engine idling cannot be achieved, an additional pneumatic synchronization will be necessary.

B. Adjust Throttle Control
(1) Move throttle lever in the cockpit to full throttle position.
(2) Disconnect control cables from the throttle control arms of both carburetors.
(3) Move throttle lever in the cockpit 1-2 mm (0.04-0.08 in.) back.
(4) Tighten the Bowden cable clamps on the throttle control arms of both carburetors.
(5) Move throttle control lever between idle and full throttle positions. Ensure the throttle control lever is only limited by the throttle control arm stops on the carburetors and has positive clearance of 1 mm (0.04 in.) to the console slot in both the full forward and full aft positions. There must be no notable bulging of the Bowden cables on the carburetors with control lever in the full throttle position.

WARNING: IN FULL THROTTLE POSITION THE THROTTLE WIRE MUST NOT BULGE NOTABLE OUT OF LINE BETWEEN THE CARBURETOR LEVER AND THE BOWDEN CABLE ADJUSTMENT, BECAUSE THIS MAY RESULT IN FATIGUE FAILURE OF THE THROTTLE WIRE!

(6) Adjust rear stop adjusting bolt in the cockpit so the throttle control lever and the control arms of the carburetors contact their rear stops simultaneously.
(7) Perform carburetor synchronization (refer to ROTAX Maintenance Manual for Rotax Engine Type 912 Series, chapter 12-20-00, section 10).

C. Throttle Inspection/Check
(1) Check proper Bowden cable routing to prevent influence to carburetors actuation caused by any movement of engine or other controls, thus possibly falsifying precise idle speed setting and synchronization.
(2) Inspect the throttle control cable attachment to carburetors throttle control arm and to the control quadrant. Check hardware for security and condition.
(3) Check the throttle control slides smoothly and without any resistance to movement throughout its full range of travel. Verify the throttle control lever is only limited by the throttle control arm stops on carburetors and has positive clearance of 1 mm (0.04 in.) to the console slot in both the full forward and full aft positions. There must be no notable bulging of the Bowden cables on the carburetor with control lever in the full throttle position.
(4) Check reset springs and inspect engagement holes for wear.
(5) If required lubricate carburetors actuation linkage with engine oil.

# CHAPTER 77

# ENGINE INDICATING

## TABLE OF CONTENTS


| Title<br>Effectivity | Chapter<br>Section<br>Subject | Page |
|---|---|---|
| ENGINE INDICATING - GENERAL | 77-00-00 | 1 |
| Introduction | 77-00-00 | 1 |
| General Description | 77-00-00 | 1 |
| POWER - MAINTENANCE PRACTICES | 77-10-00 | 201 |
| General | 77-10-00 | 201 |
| Tachometer Removal/Installation | 77-10-00 | 201 |
| RPM Sensor Removal/Installation | 77-10-00 | 201 |
| Manifold Pressure Gage Removal/Installation | 77-10-00 | 201 |
| TEMPERATURE - MAINTENANCE PRACTICES | 77-20-00 | 201 |
| General | 77-20-00 | 201 |
| CHT Indicator Removal/Installation | 77-20-00 | 201 |
| CHT Sensor Removal/Installation | 77-20-00 | 201 |

# ENGINE INDICATING - GENERAL

1. Introduction

   A. This chapter describes those systems and components, which indicate engine operation.

   B. Oil pressure and oil temperature measuring systems are described in Chapter 79, section „OIL" (refer to 79-30-00).

2. General Description

   A. The following parameters of the engine output and condition are measured and indicated:
      (1) Engine Speed
      (2) Manifold Pressure
      (3) Oil Pressure
      (4) Oil Temperature
      (5) Cylinder Head Temperature

   B. Except the manifold pressure, all parameters are measured with sensors, which transform engine parameters in equivalent electrical signals. These signals are transmitted to the indicator and translated into readings.
      The manifold pressure is measured mechanically by a pressure gage, which is connected with the engine through a rubber hose.

   C. The engine gages are placed in a cluster on the instrument panel, to the right of the avionic equipment.

## POWER - MAINTENANCE PRACTICES

1. General

A. The AQUILA AT01 engine speed is indicated by a tachometer, which is mounted on the left instrument panel adjacent to flight instruments. The tachometer receives an electrical speed signal from a sensor mounted on the aft end of the engine, on ignition housing. The maintenance is limited to removal and installation of the tachometer and the sensor assy.

B. The manifold pressure is measured mechanically by a pressure gage, which is connected through a rubber hose to the compensating tube, located on top of engine. The maintenance is limited to removal and installation of the pressure gage.
If the rubber hose is damaged or in bad condition it must be replaced.

1. Tachometer Removal/Installation

A. Remove Tachometer
(1) Ensure BAT switch is in OFF position.
(2) Remove glareshield (refer to 31-10-00).
(3) Locate tachometer and disconnect electrical cables from backside of tachometer.
(4) While supporting tachometer, remove screws securing unit to instrument panel.
(5) Remove tachometer from aircraft.

B. Install Tachometer and Drive Cable
(1) Position tachometer in instrument panel and attach with four screws.
(2) Reconnect electrical cables to backside of tachometer.
(3) Install glareshield (refer to 31-10-00).

2. RPM Sensor Removal/Installation

A. Remove RPM Sensor
(1) Ensure BAT switch is in OFF position.
(2) Remove engine cowling (refer to 71-10-00).
(3) Disconnect RPM sensor leads at connector.
(4) Locate RPM sensor and remove screw and washer securing RPM sensor to ignition housing. Remove sensor from aircraft.

B. Install Sensor
(1) Install RPM sensor to ignition housing using washer and screw.
(2) Route sensor leads and reconnect at connector.
(3) Install engine cowling (refer to 71-10-00).

3. Manifold Pressure Gage Removal/Installation

A. Remove Manifold Pressure Gage
   (1) Remove glareshield (refer to 31-10-00).
   (2) Locate gage and remove rubber hose from gage.
   (4) While supporting manifold pressure gage, remove screws securing unit to instrument panel.
   (5) Remove manifold pressure gage from aircraft.

B. Install Manifold Pressure Gage
   (1) Position Gage in instrument panel and attach with four screws.
   (2) Attach rubber hose.
   (3) Install glareshield (refer to 31-10-00).

## TEMPERATURE - MAINTENANCE PRACTICES

1. General

A. The cylinder head temperature is measured by a temperature sensitive sensor that is mounted in the No. 3 cylinder head.
The indicator is located within the cluster of engine gauges on the right instrument panel. It translates the electrical signal from the sensor in a reading.

B. The maintenance of the CHT measuring system is limited to the removal and installation of the sensor and indicator.

2. CHT Indicator Removal/Installation

A. Remove CHT Indicator
(1) Ensure electrical power to aircraft is OFF.
(2) Remove glareshield (refer to 31-10-00).
(2) Disconnect electrical connectors from backside of indicator.
(3) While supporting CHT indicator, remove screws securing indicator to instrument panel, and remove indicator from aircraft.

B. Install CHT Indicator
(1) Position CHT indicator in instrument panel and attach with screws.
(2) Connect electrical connectors to indicator.

3. CHT Sensor Removal/Installation

A. Remove CHT Sensor
(1) Ensure electrical power to aircraft is OFF.
(2) Remove engine cowling (refer to 71-10-009.
(3) Disconnect sensor electrical lead at sensor.
(4) Unscrew and remove sensor from engine.

B. Install CHT Sensor
(1) Install sensor to engine. Torque to 10 Nm (90 in.lb).
(2) Connect electrical connector to sensor.
(3) Install engine cowling (refer to 71-10-00).

# CHAPTER 78

# EXHAUST

## TABLE OF CONTENTS


| Title | Chapter Section Subject | Page |
|---|---|---|
| EXHAUST - GENERAL | 78-00-00 | 1 |
| Introduction | 78-00-00 | 1 |
| General Description | 78-00-00 | 1 |
| EXHAUST SYSTEM - MAINTENANCE PRACTICES | 78-10-00 | 201 |
| General | 78-10-00 | 201 |
| Exhaust System Removal/Installation | 78-10-00 | 201 |
| Main Muffler Inspection/Check | 78-10-00 | 201 |

## EXHAUST SYSTEM - GENERAL

1. Introduction

   A. This chapter describes such systems and components, which direct the engine exhaust gases overboard.

2. General Description

   A. The exhaust system is comprised of four exhaust pipes (from each cylinder), a main muffler, a second muffler, and a tailpipe.
   A shroud around the main muffler serves as a heat exchanger. The air that is heated by the heat exchanger is then ducted to the aircraft cabin for heating of the cabin and windshield defrosting.

## EXHAUST SYSTEM - MAINTENANCE PRACTICES

1. General

A. Each engine cylinder has an exhaust pipe leading down to the main muffler that is located beneath the engine. The exhaust pipes and the second muffler are connected to the main muffler over ball joints. The ball joints are employed to allow movement due to heat expansion and normal operating loads at connections. The ball joints are secured with two springs each. The single tail pipe routes the exhaust gases out through the lower cowling area.

B. Maintenance practices for the exhaust system include the exhaust system removal and installation and the leak test.

2. Exhaust System Removal/Installation

A. Remove Exhaust System
(1) Remove engine cowling (refer to 71-10-00).
(2) Disconnect flexible heat ducts from heat shroud.
(3) Remove nut and washer securing tailpipe support bracket to engine mount.
(4) While supporting exhaust system, remove nuts securing risers to engine and remove exhaust system from engine.

B. Install Exhaust System

(1) Position exhaust system with new gaskets to engine and secure to engine using nuts.
(2) Secure tailpipe support bracket to engine mount with washer and nut.
(3) Connect flexible heat ducts to heat shroud.
(4) Install engine cowling (refer to 71-10-00).

3. Main Muffler Inspection/Check

WARNING: FAILURE TO INSPECT MAIN MUFFLER FOR LEAKS COULD RESULT IN CARBON MONOXIDE ENTERING THE CABIN AREA, LEADING TO SERIOUS INJURY OR DEATH.

A. The main muffler inspection/check time intervals contained in chapter 5 “Time Limits / Maintenance Checks”.

B. Main Muffler Inspection/Check Procedures
(1) Remove risers from muffler and unwrap heat shroud from around muffler.
(2) Using visual inspection, examine the exterior of muffler, looking for cracks, dents, soot, and evidence of exhaust gasses escaping through holes or tears. Pay particular attention to welds.
(3) Examine the interior of the main muffler with a flashlight and a mirror, looking for tears, holes and general condition.
(4) Use a water test to determine main muffler integrity:
(a) Install solid test plugs on three muffler openings.

(b) Install ported test plug on remaining muffler opening.
(c) Attach pressure source and apply 2.5 psi to interior of muffler.
(d) Submerge pressurized muffler in water and inspect for leaks.
(e) If any leaks are detected, the muffler must be removed from service and repaired or replaced.
(f) Remove muffler from water, remove test plugs and dry muffler with compressed air.

# CHAPTER 79

# OIL

## TABLE OF CONTENTS


| Title | Chapter Section Subject | Page | Effectivity |
|---|---|---|---|
| OIL - GENERAL | 79-00-00 | 1 | |
| Introduction | 79-00-00 | 1 | |
| General Description | 79-00-00 | 1 | |
| OIL TANK - MAINTENANCE | 79-10-00 | 201 | |
| General | 79-10-00 | 201 | |
| Oil Tank Removal/Installation | 79-10-00 | 201 | |
| Oil Tank Cleaning | 79-10-00 | 201 | |
| OIL COOLER - MAINTENANCE | 79-20-00 | 201 | |
| General | 79-20-00 | 201 | |
| Oil Cooler Removal/Installation | 79-20-00 | 201 | |
| OIL PRESSURE INDICATION - MAINTENANCE | 79-31-00 | 201 | |
| General | 79-31-00 | 201 | |
| Oil Pressure Indicator Removal/Installation | 79-31-00 | 201 | |
| Oil Pressure Transducer Removal/Installation | 79-31-00 | 201 | |
| OIL TEMPERATURE INDICATION - MAINTENANCE | 79-33-00 | 201 | |
| General | 79-33-00 | 201 | |
| Oil Temperature Indicator Removal/Installation | 79-33-00 | 201 | |
| Oil Temperature Sensor Removal/Installation | 79-33-00 | 201 | |

## OIL - GENERAL

1. Introduction

A. This chapter covers those units and components which are not part of the engine but store and/or supply lubricating oil to/from the engine or indicate oil condition.
For additional information on the internal engine oil system components, refer to the respective engine manufacturer's publications.

2. General Description

A. The external oil system comprises an oil tank, oil cooler and an oil filter. An oil pressure and oil temperature measuring system monitors oil condition.
The oil tank is attached to the engine mount on the right hand side of the engine. The oil cooler is located in the forward part of the lower engine cowling behind the main air intake. It is connected to the engine and the oil tank via flexible hoses. The oil pump with an integrated oil pressure regulator is mounted at the front of the engine below the propeller gearbox. It is driven by the camshaft. The oil filter is installed on the left side of the oil pump casing.

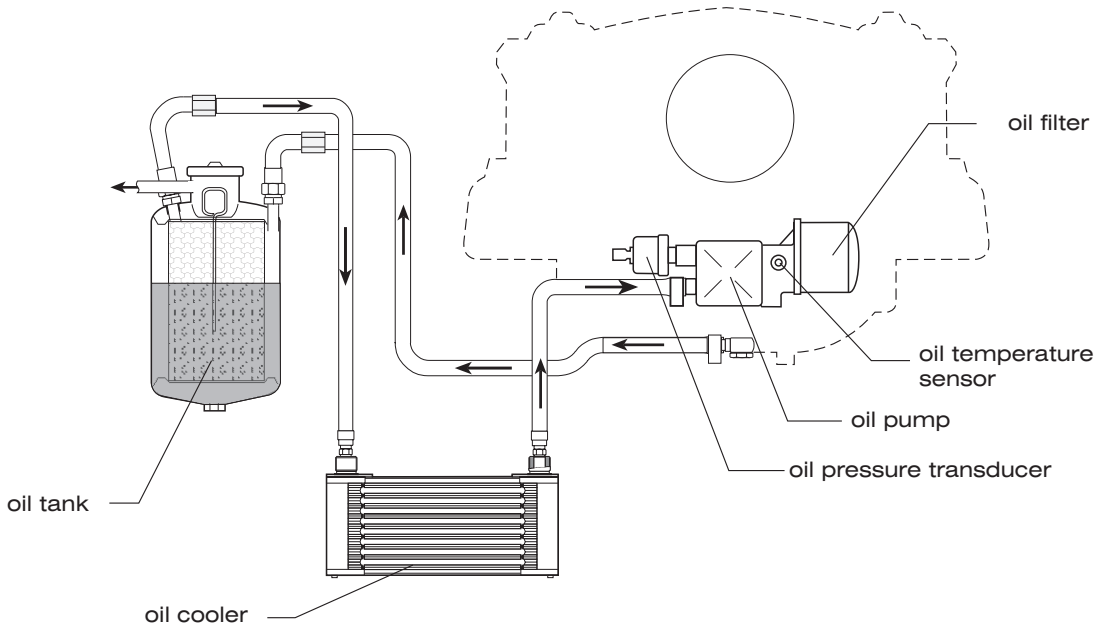


Lubrication System (Schematic)
Figure 1

B. Oil Circuit

The oil pump sucks the engine oil from the oil tank via the oil cooler and forces it through the oil filter to the points of lubrication in the engine. Surplus oil emerging from the points of lubrication accumulates on the bottom of the crankcase and is forced back to the oil tank by the blow-by gases. The oil circuit is vented via a bore on the oil tank.

C. Oil Indication

Oil temperature and oil pressure are measured by sensors electrically connected with analog instruments. Refer to sections 79-31-00 and 79-33-00 for further information on the engine oil indicating system.

## OIL TANK - MAINTENANCE

1. General

A. The oil tank is attached to the engine mount. It can be removed and disassembled (figure 201) for maintenance.

B. The oil tank must be removed, disassembled and cleaned when oil contamination is detected.

2. Oil Tank Removal/Installation

CAUTION: IF ENGINE HAS BEEN RUNNING RECENTLY, HOT ENGINE COMPONENTS MAY CAUSE SKIN BURNS!

A. Remove Oil Tank
(1) Remove upper engine cowling (refer to 71-10-00).
(2) Disconnect inlet and outlet hoses at oil tank.
(3) Loosen clamps securing oil tank to engine mount. Remove oil tank from aircraft.

B. Install Oil Tank
(1) Position oil tank on engine mount and secure with clamps.
(2) Connect inlet and outlet hoses at oil tank.
(3) Replenish engine oil as required. Refer to Rotax SI-912-018 for purging of the lubrication system.
(4) Install engine cowling (refer to 71-10-00).
(5) Perform an engine run and check oil tank and connections for leaks.

3. Oil Tank Cleaning

CAUTION: IF ENGINE HAS BEEN RUNNING RECENTLY, HOT ENGINE COMPONENTS MAY CAUSE SKIN BURNS!

A. Oil Tank Cleaning Procedure
(1) Remove upper engine cowling (refer to 71-10-00).
(2) Disconnect inlet and outlet hoses at oil tank.
(3) Remove clamp and oil tank cover with O-ring.
(4) Remove baffle insert and partition.
(5) Unscrew and remove drain screw.
(6) Clean all parts and inspect for damage.
(7) Re-assemble oil tank.
(8) Fit drain screw with a new gasket, torque to 25 Nm (220 in.lbs) and safety wire.
(9) Connect inlet and outlet hoses at oil tank.
(10) Replenish engine oil as required. Refer to Rotax SI-912-018 for purging of the lubrication system.
(11) Install engine cowling (refer to 71-10-00).
(12) Perform an engine run and check oil tank and connections for leaks.

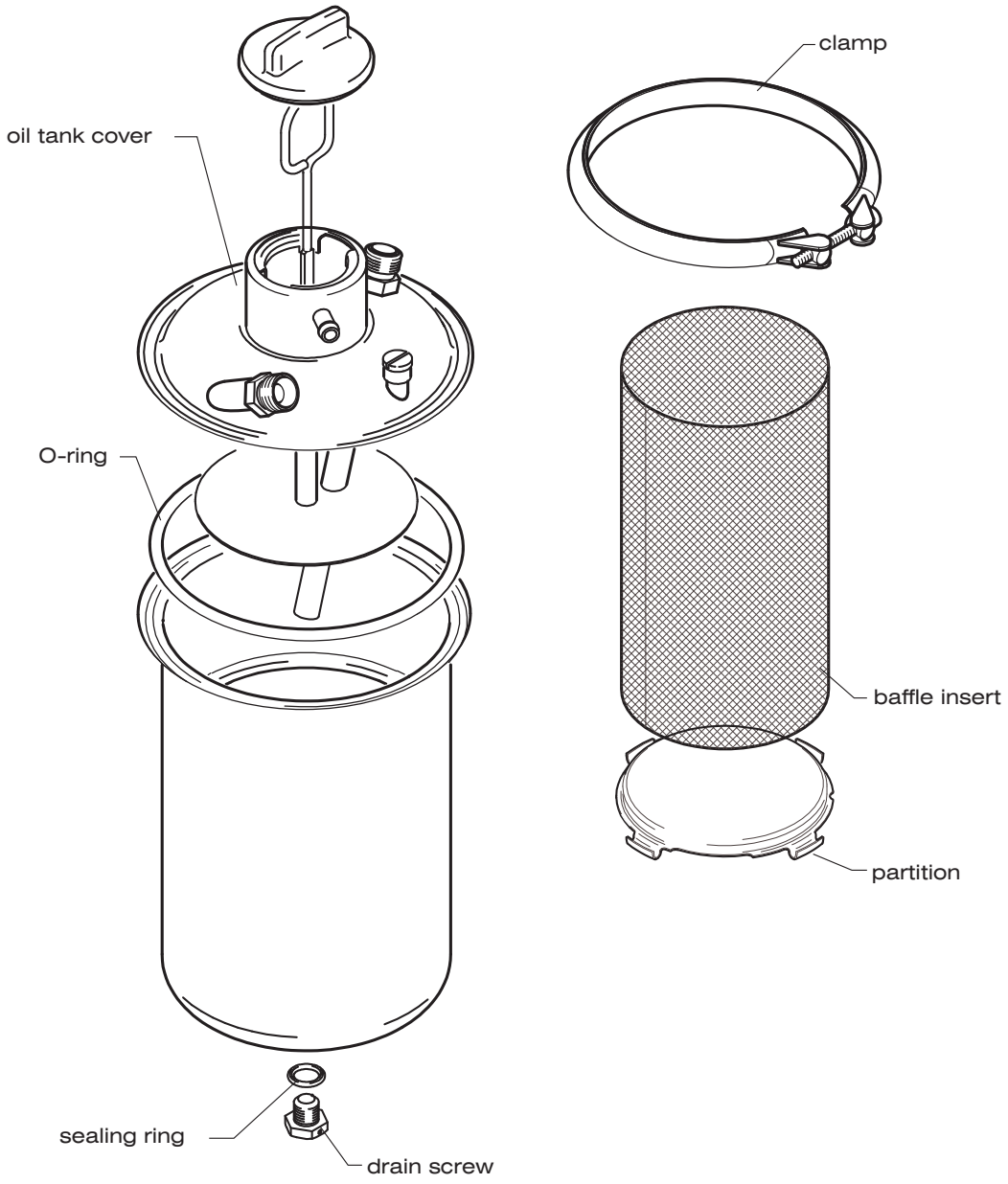


Oil Tank Disassembly
Figure 201

## OIL COOLER - MAINTENANCE

1. General

CAUTION: IF ENGINE WAS RUNNING RECENTLY, HOT ENGINE COMPONENTS MAY CAUSE SKIN BURNS!

A. The oil cooler is mounted in front of the radiator on the inner forward part of the lower engine cowling behind the main air intake. There are two types of cooling systems in use:
- Type 1: Standard cooling system of the AQUILA AT01 with a combined oil / water radiator and waterless coolant.
- Type 2: A retrofit cooling system with separate oil and water radiators and conventional coolant based on water and ethylene glycol. Refer to SB-AT01-029 for further information on upgrading to this type of cooling system.

B. The oil cooler should be replaced if metal particles were found while servicing oil screens and the engine therefore had to be disassembled.

2. Oil Cooler Removal/Installation

A. The standard (type 1) cooling system has a combined oil / water radiator. Refer to 75-00-00 for removal/installation of the combined oil / water radiator.

B. Remove Oil Cooler (cooling system type 2 only)
(1) Remove engine cowling (refer to 71-10-00).
(2) Disconnect inlet and outlet hoses at oil cooler.
(3) Remove nuts securing oil cooler to mounting plate and remove oil cooler.

C. Install Oil Cooler (cooling system type 2 only)
(1) Install oil cooler on mounting plate using washers and nuts.
(2) Connect inlet and outlet hoses at oil cooler.
(3) Replenish engine oil as required. Refer to Rotax SI-912-018 for purging of the lubrication system.
(4) Install engine cowling (refer to 71-10-00).
(5) Perform an engine run and check oil cooler and connections for leaks.

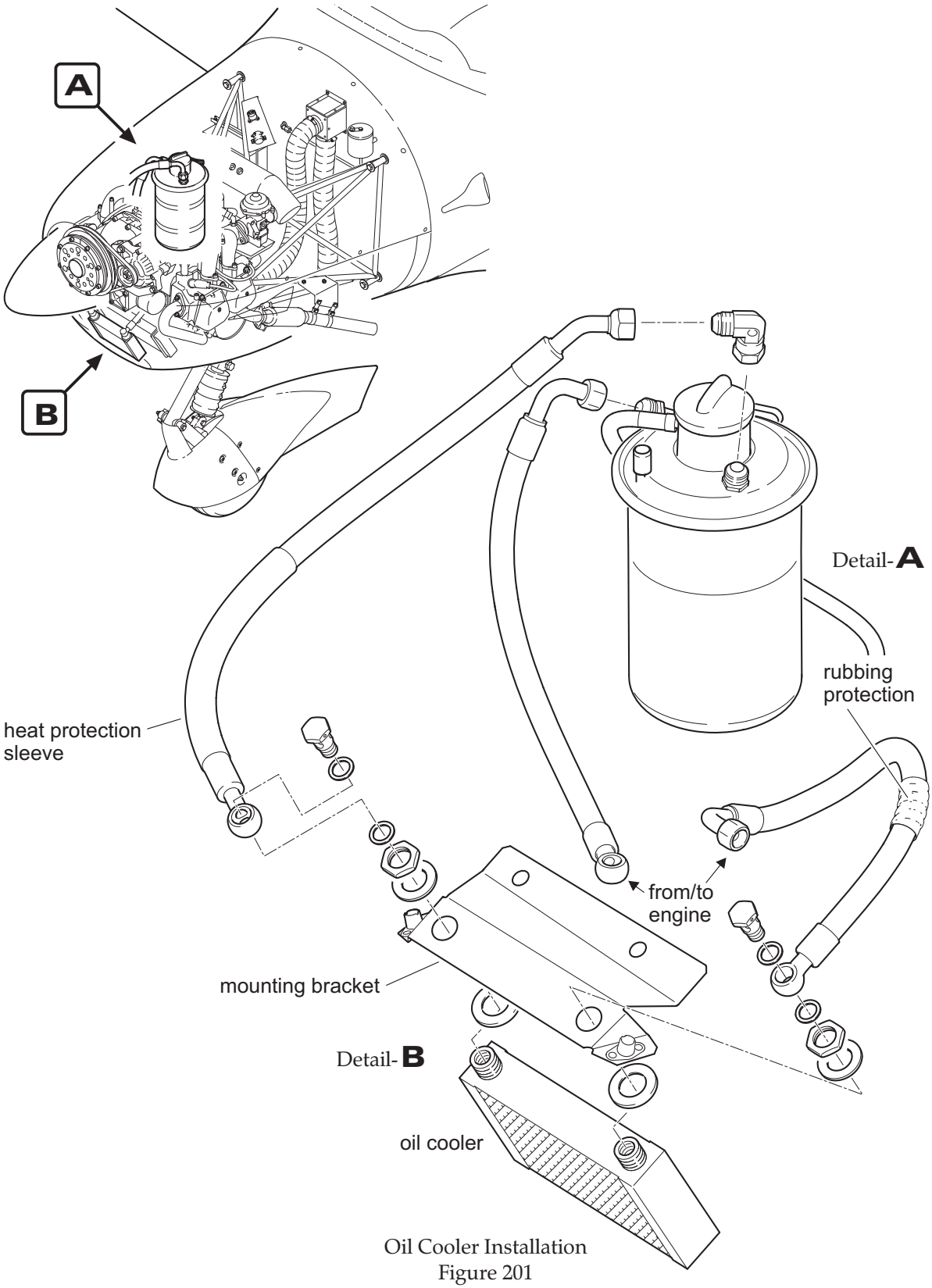


Oil Cooler Installation
Figure 201

## OIL PRESSURE INDICATION - MAINTENANCE

1. General

A. The oil pressure indicating system consists of an oil pressure transducer, an oil pressure indicator and wiring connecting the two components.
The oil pressure transducer is mounted on the right side of the oil pump casing. The oil pressure transducer is a membrane pressure transducer with a built-in current source. The current varies depending upon oil pressure. The transducer is supplied with system voltage.
The analog oil pressure indicator is located on the right side of the instrument panel in the cluster of engine gauges.

B. Maintenance is limited to the removal and installation of the system components.

2. Oil Pressure Indicator Removal/Installation

A. Remove Oil Pressure Indicator
(1) Ensure electrical power to aircraft is OFF.
(2) Disconnect battery (refer to 24-30-00).
(3) Remove glare shield (refer to 31-10-00).
(4) Remove cable connector from back of indicator.
(5) While supporting the indicator, remove screws attaching indicator to instrument panel.
(6) Remove indicator from aircraft.

B. Install Oil Pressure Indicator
(1) Position indicator to instrument panel hole and secure with screws.
(2) Install cable connector at back of indicator.
(3) Install glare shield (refer to 31-10-00).
(4) Reconnect battery (refer to 24-30-00).

3. Oil Pressure Transducer Removal/Installation

A. Remove Oil Pressure Transducer
(1) Ensure electrical power to aircraft is OFF.
(2) Remove engine cowling (refer to 71-10-00).
(3) Disconnect battery (refer to 24-30-00).
(4) Disconnect electrical connector from transducer.
(5) Unscrew and remove transducer and gasket from engine.

CAUTION: CAP OR PLUG TRANSDUCER PORT TO PREVENT ENTRY OF FOREIGN MATERIAL.

B. Install Oil Pressure Transducer
   (1) Install new gasket and transducer to engine. Torque to 15 Nm (135 in.lbs).
   (2) Connect electrical connector to transducer.
   (3) Reconnect battery (refer to 24-30-00).
   (4) Install engine cowling (refer to 71-10-00).

## OIL TEMPERATURE INDICATION - MAINTENANCE

1. General

A. The oil temperature indicating system consists of a temperature sensor, an oil temperature indicator and wiring connecting the two components.
Oil temperature is measured in the oil filter / oil pump area. The resistance-type sensor functions with system voltage. The analog oil temperature indicator is mounted on the right side of the instrument panel in the cluster of engine gauges.

B. Maintenance is limited to the removal and installation of the system components.

2. Oil Temperature Indicator Removal/Installation

A. Remove Oil Temperature Indicator
(1) Ensure electrical power to aircraft is OFF.
(2) Disconnect battery (refer to 24-30-00).
(3) Remove glare shield (refer to 31-10-00).
(4) Remove cable connector from back of indicator.
(5) While supporting the indicator, remove screws attaching indicator to instrument panel.
(6) Remove indicator from aircraft.

B. Install Oil Temperature Indicator
(1) Position indicator in the instrument panel hole and secure with screws.
(2) Install cable connector at back of indicator.
(3) Install glare shield (refer to 31-10-00).
(4) Reconnect battery (refer to 24-30-00).

3. Oil Temperature Sensor Removal/Installation

A. Remove Oil Temperature Sensor
(1) Ensure electrical power to aircraft is OFF.
(2) Remove engine cowling (refer to 71-10-00).
(3) Disconnect battery (refer to 24-30-00).
(4) Disconnect electrical lead to sensor.
(5) Unscrew and remove sensor from engine.

CAUTION: CAP OR PLUG SENSOR PORT TO PREVENT ENTRY OF FOREIGN MATERIAL.

B. Install Oil Temperature Sensor
(1) Install sensor to engine. Torque to 10 Nm (90 in.lbs).
(2) Connect electrical connector to sensor.
(3) Reconnect battery (refer to 24-30-00).
(4) Install engine cowling (refer to 71-10-00).

# CHAPTER 80

# STARTING

## TABLE OF CONTENTS


| Title | Chapter Section Subject | Page |
|---|---|---|
| STARTING - GENERAL | 80-00-00 | 1 |
| Introduction | 80-00-00 | 1 |
| General Description | 80-00-00 | 1 |
| STARTER - MAINTENANCE PRACTICES | 80-10-00 | 201 |
| General | 80-10-00 | 201 |
| Starter Removal/Installation | 80-10-00 | 201 |

## STARTING - GENERAL

1. Introduction

   A. In this chapter, the starter as a component of the starting system is described.

1. General Description

   A. The starting system is comprised of the starter, a relay and ignition / starter switch.
   While starting the engine, it cooperates with the ignition system. The starter is mounted at the rear lower right side of the engine.
   During the engine starting process the starter pinion gear drives the crankshaft through a freewheel ring gear and turns the engine over.

## STARTER - MAINTENANCE PRACTICES

1. General

A. The aircraft is equipped with a direct drive 12 VDC starter. The starter is mounted at the rear lower right side of the engine.
While starting, a starter relay is activated by the ignition key. Its contacts close and electrical current energizes the starter motor. The starter pinion gear drives the crankshaft through a freewheel gear and turns the engine over.
When engine is running, a sprag clutch decouples the freewheel gear from the crankshaft.

B. For complete description, operation, troubleshooting, maintenance, overhaul and repair information pertaining the starter, refer to appropriate manufacturers publication.

2. Starter Removal /Installation

A. Remove the Starter

(1) Remove engine (Refer to 71-00-01).
(2) Disconnect large (P-lead) electrical cable at starter.
(3) Remove clamp, securing starter to engine.
(4) Remove nuts, lock washers, and washers securing starter to engine.
(5) Remove starter with spacers and washers from engine.

B. Install Starter
(1) Position starter to engine. Ensure washers and spacers are in place.
(2) Install washers, lock washers, and nuts securing starter to engine.
(3) Install clamp, securing starter to engine.
(4) Reconnect large (P-lead) electrical cable at starter.
(5) Install engine cowling (Refer to 71-00-01).

# CHAPTER 91

# CHARTS AND WIRING DIAGRAMS

## TABLE OF CONTENTS


| Title | Chapter Section Subject | Page | Effectivity |
|---|---|---|---|
| CHARTS AND DIAGRAMS - GENERAL | 91-00-00 | | 1 |
| Introduction | 91-00-00 | | 1 |
| General Description | 91-00-00 | | 1 |
| Instrument Panel Wiring Diagram | 91-00-01 | | 1 |
| COM/NAV and Intercom Wiring Diagram (Instrument Panel) | 91-00-01 | | 3 |
| COM/NAV and Intercom Wiring Diagram (Fuselage) | 91-00-01 | | 5 |
| Engine Wiring Diagram | 91-00-01 | | 7 |
| Fuselage Wiring Diagram | 91-00-01 | | 9 |
| Wings Wiring Diagram | 91-00-01 | | 11 |
| Avionics Wiring Diagram, Modification 1 (Instrument Panel) (KX125, GNS 430, GTX 327, GMA 340) | 91-00-01 | | 13 |
| Avionics Wiring Diagram, Modification 1 (Fuselage) | 91-00-01 | | 15 |
| Avionics Wiring Diagram, Modification 2 (KX125, GNS 430, GTX 330, GMA 340) | 91-00-01 | | 17 |
| Avionics Wiring Diagram, Modification 3 (KX 125, GNS530; GTX 330, GMA 340) | 91-00-01 | | 19 |
| Avionics Wiring Diagram, Modification 4 (KX 125, GTX 330) | 91-00-01 | | 21 |
| Avionics Wiring Diagram, Modification 5 (SL 30, GTX 330, FLYMAP L) | 91-00-01 | | 23 |

## CHARTS AND WIRING DIAGRAMS - GENERAL

1. General

A. This chapter includes several wiring diagrams for reverence purposes.

1. General Description

A. The wiring diagrams listed below define the wiring of the electrical equipment which is installed in the standard aircraft.

(1) Instrument Panel (Ref. Fig. 1)
(2) COM/NAV and Intercom (Instrument Panel) (Ref. Fig. 2)
(3) COM/NAV and Intercom (Fuselage) (Ref. Fig. 3)
(4) Engine (Ref. Fig. 4)
(5) Fuselage (Ref. Fig. 4)
(6) Wings (Ref. Fig. 6)

B. The wiring diagrams listed below define the wiring of optional equipment which may be installed in the aircraft.

(1) Avionics Wiring Diagram, Modification 1 (Instrument Panel) (KX125, GNS 430, GTX 327, GMA 340) (Ref. Fig. 7)
(2) Avionics Wiring Diagram, Modification 1 (Fuselage) (Ref. Fig. 8)
(3) Avionics Wiring Diagram, Modification 2 (KX125, GNS 430, GTX 330, GMA 340) (Ref. Fig. 9)
(4) Avionics Wiring Diagram, Modification 3 (KX 125, GNS530; GTX 330, GMA 340) (Ref. Fig. 10)
(5) Avionics Wiring Diagram, Modification 4 (KX 125, GTX 330) (Ref. Fig. 11)
(6) Avionics Wiring Diagram, Modification 5 (SL 30, GTX 330, FLYMAP L) (Ref. Fig. 12)

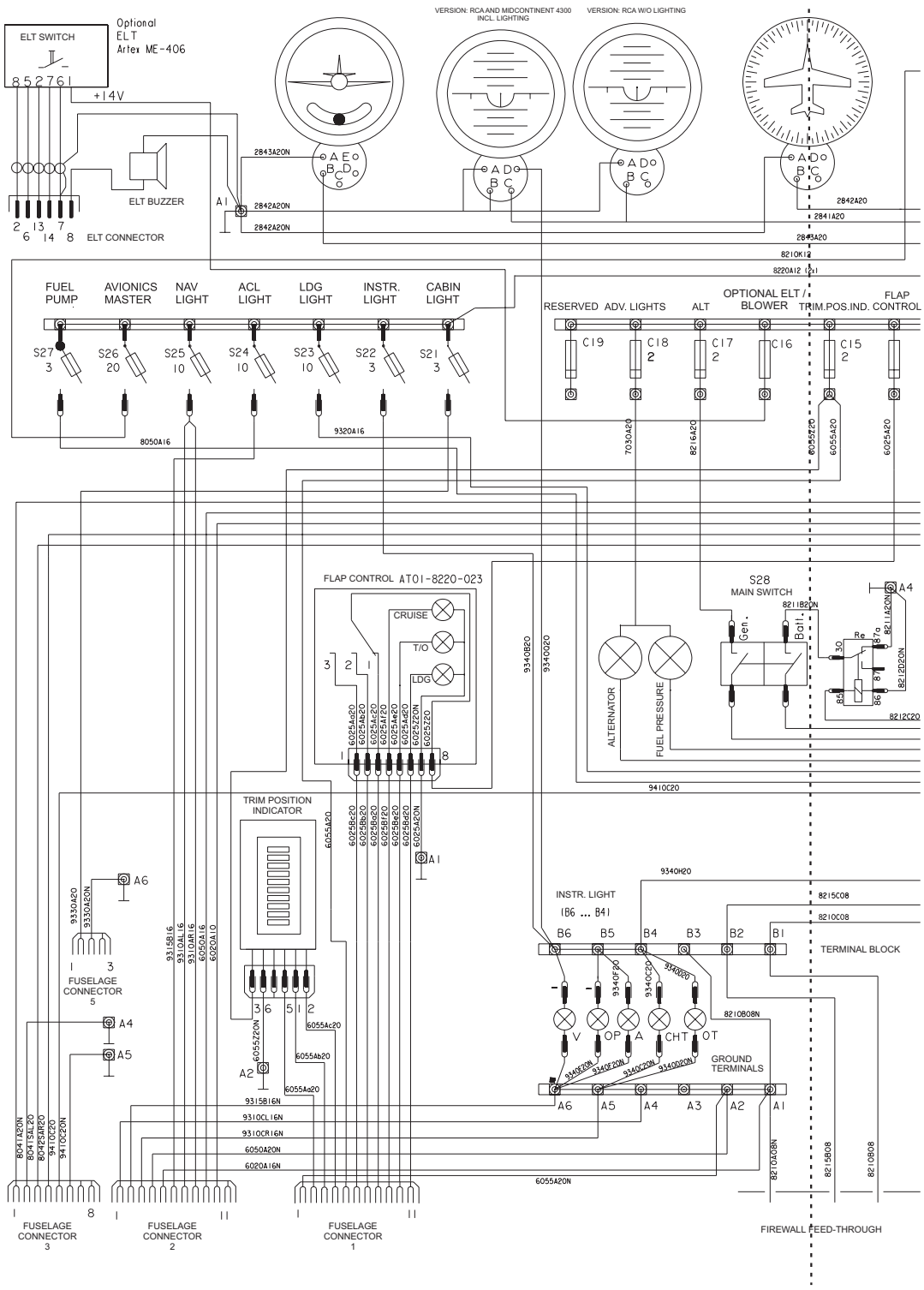


Instrument Panel Wiring Diagram
Figure 01(1)

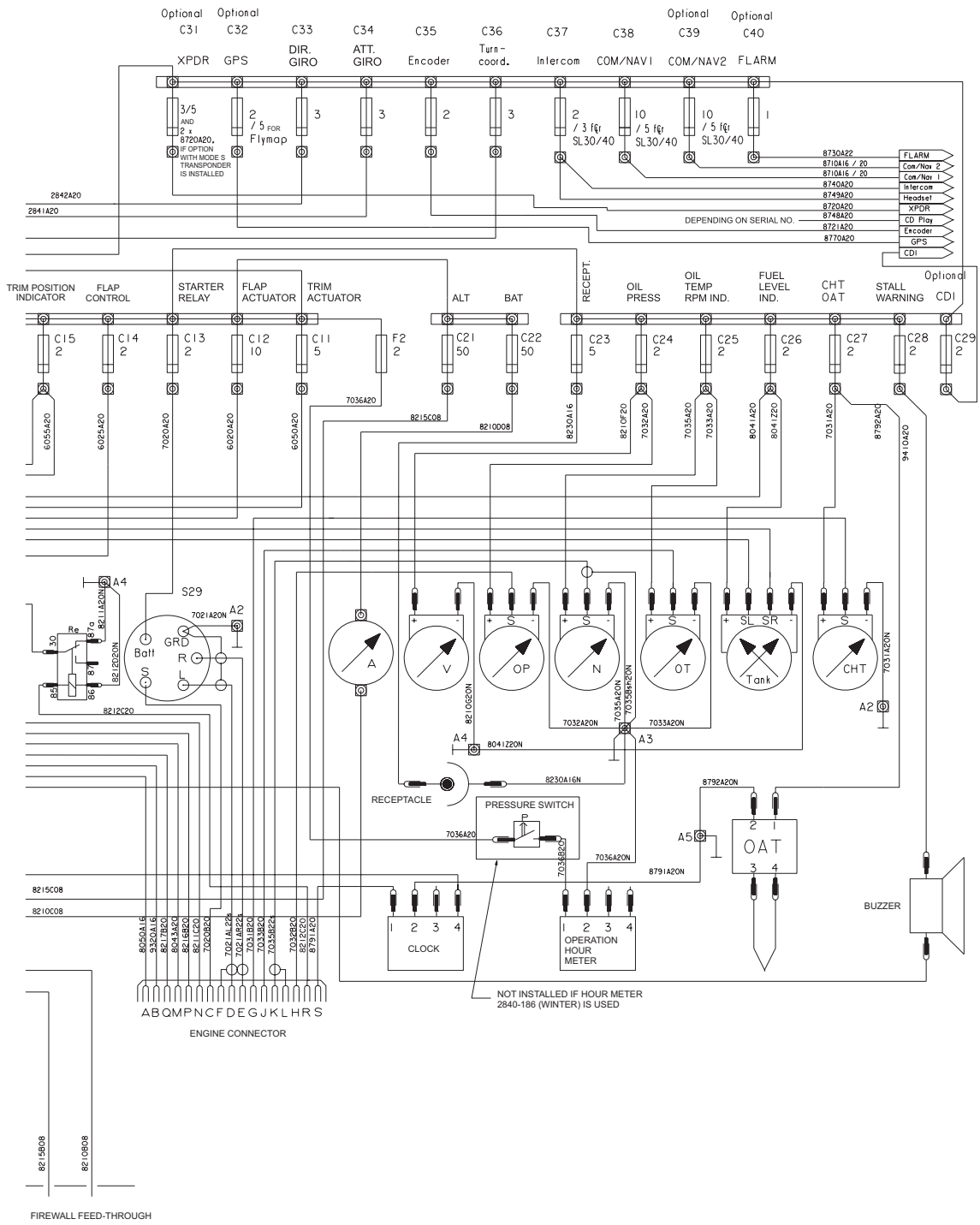


Instrument Panel Wiring Diagram
Figure 01(2)

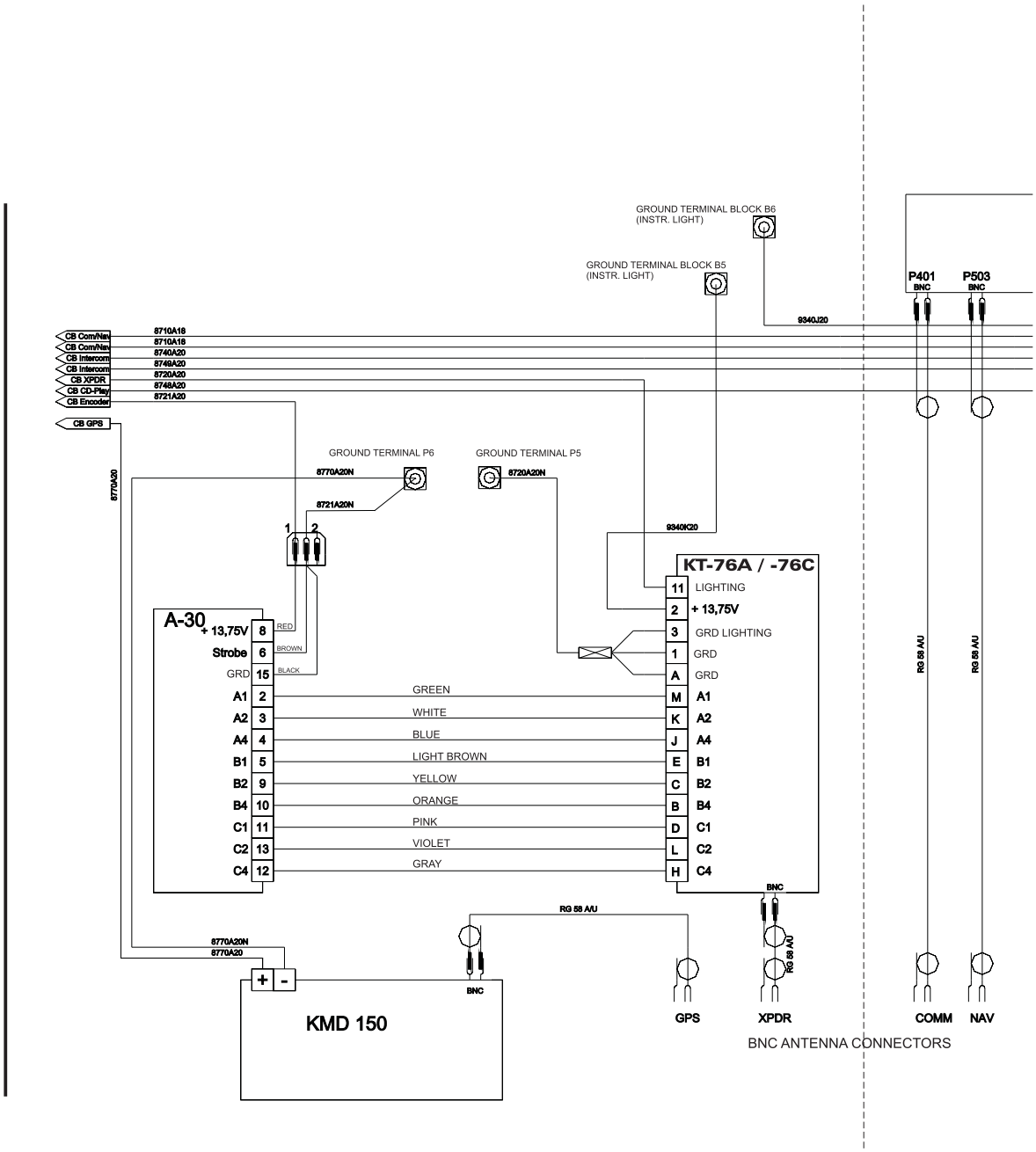


COM/NAV and Intercom Wiring Diagram (Instrument Panel)
Figure 02(1)

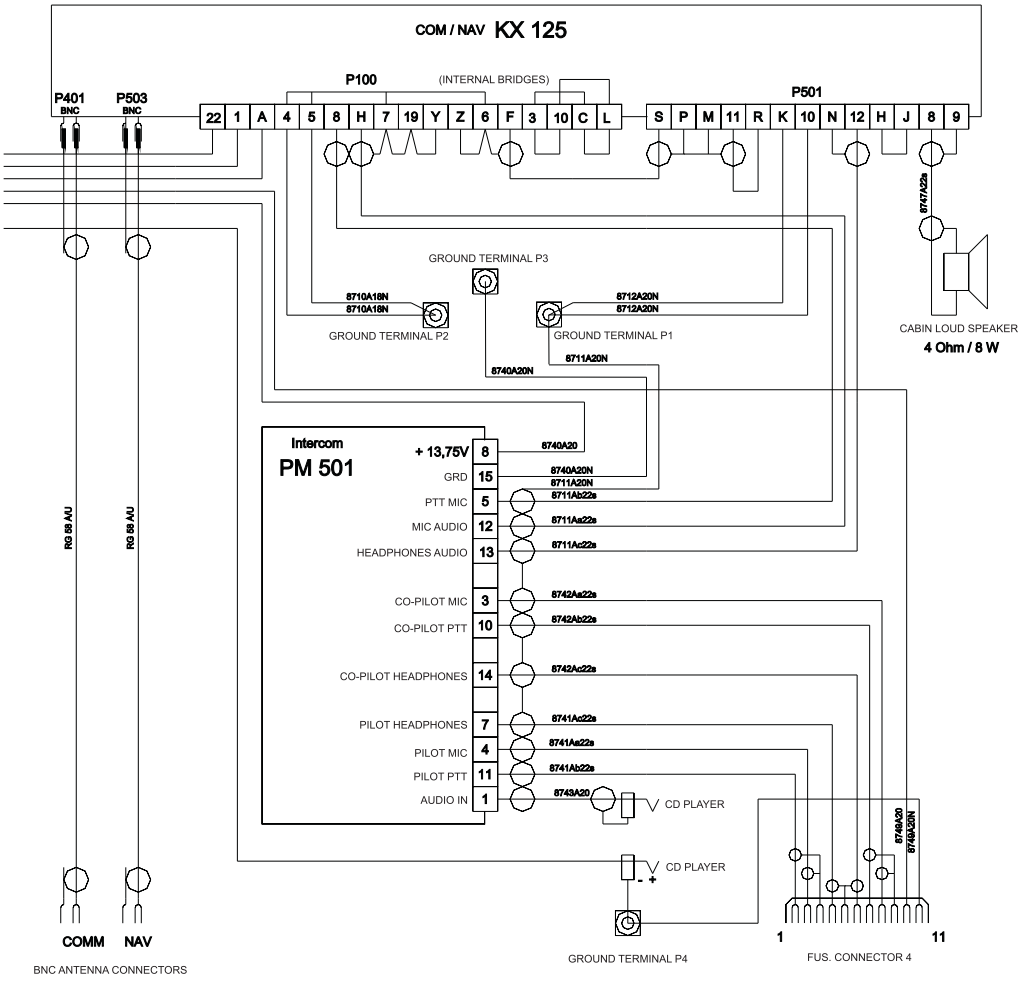


COM/NAV and Intercom Wiring Diagram (Instrument Panel)
Figure 02(2)

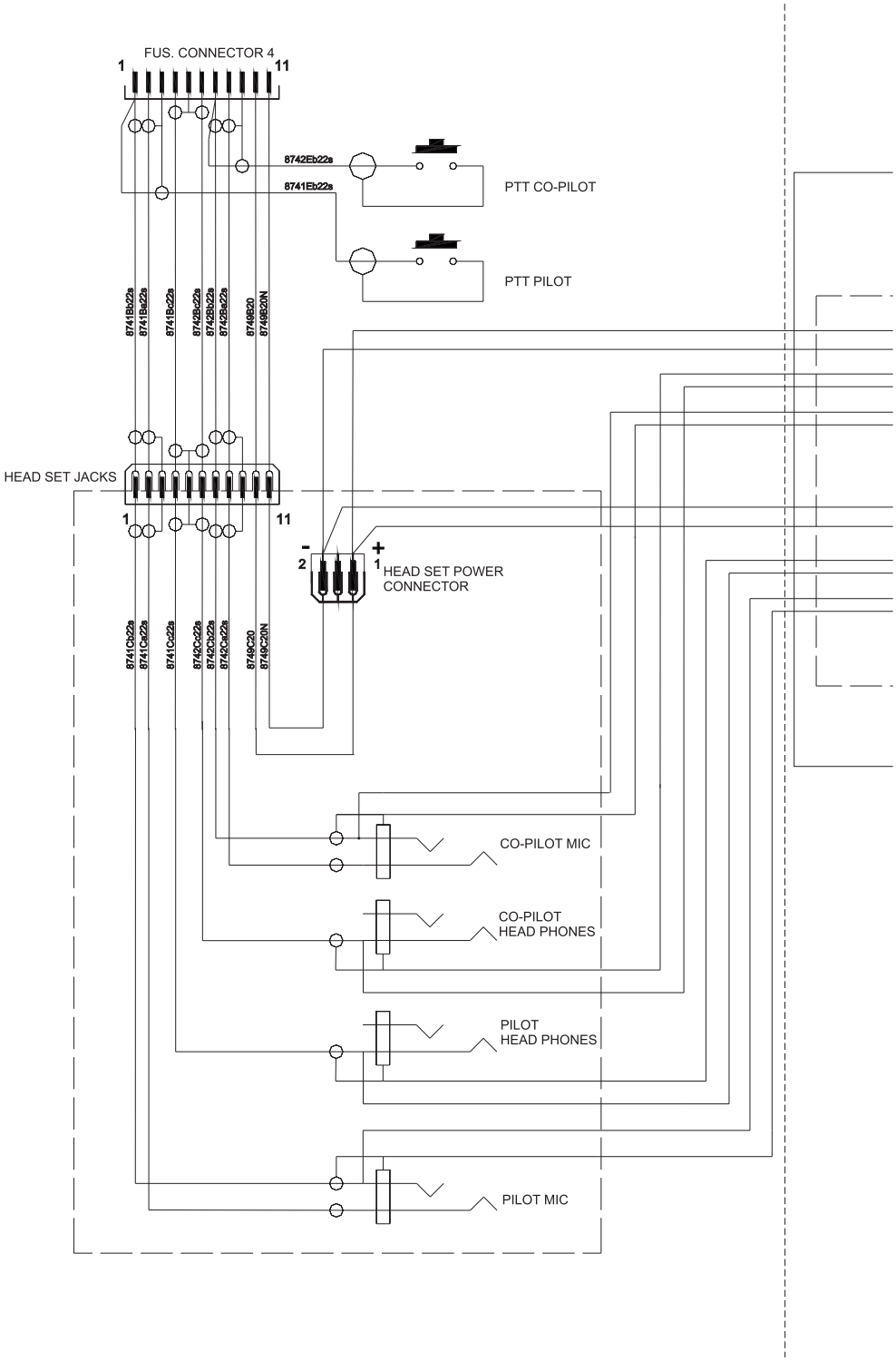


COM/NAV and Intercom Wiring Diagram (Fuselage)
Figure 03(1)

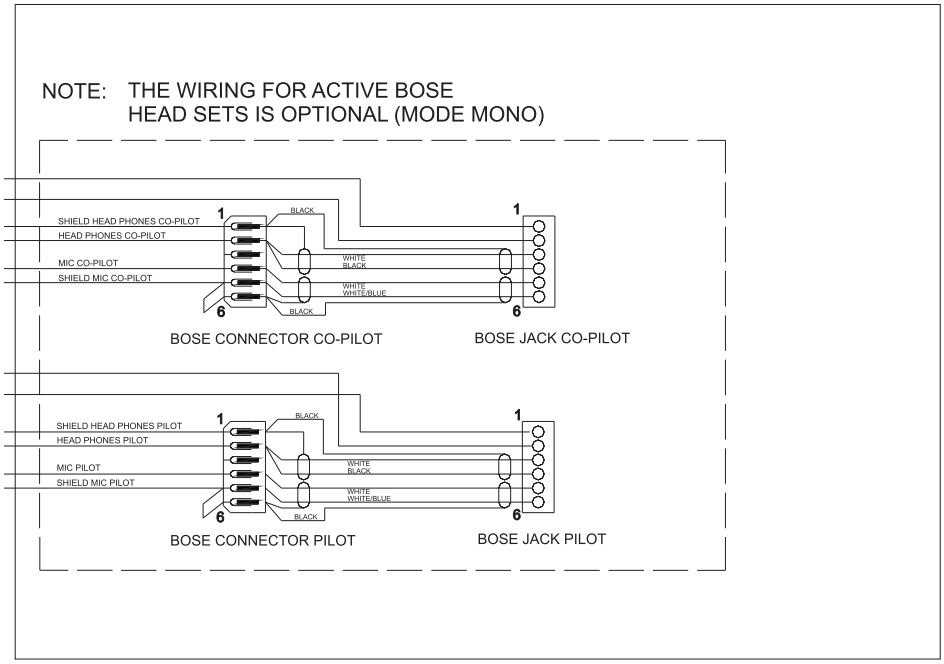


COM/NAV and Intercom Wiring Diagram (Fuselage)
Figure 03(2)

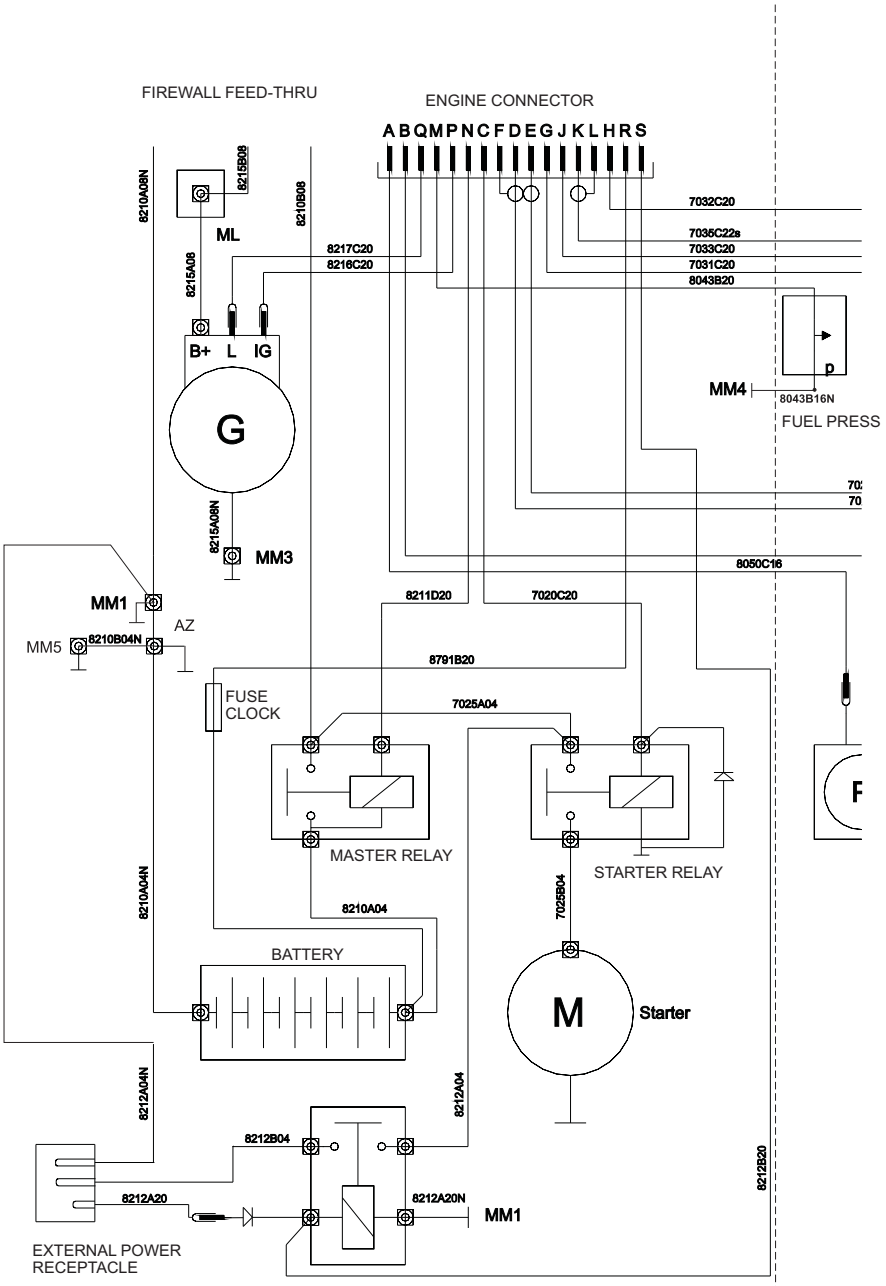


Engine Wiring Diagram
Figure 04(1)

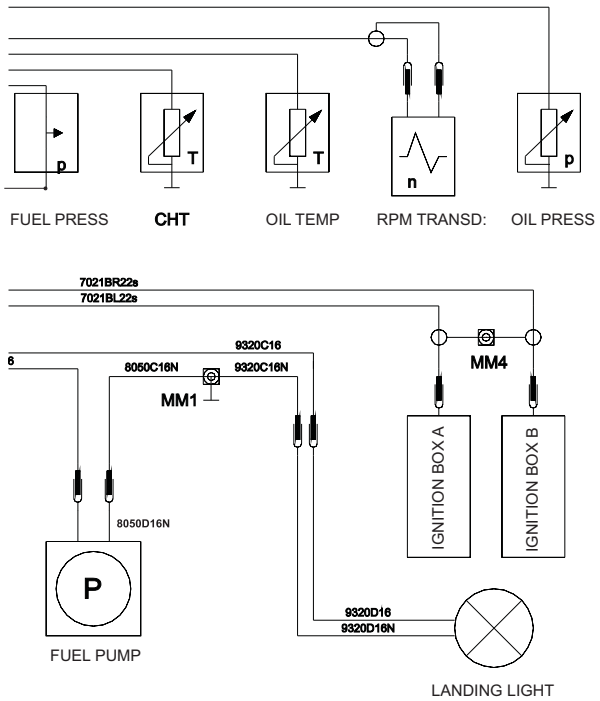


Engine Wiring Diagram
Figure 04(2)

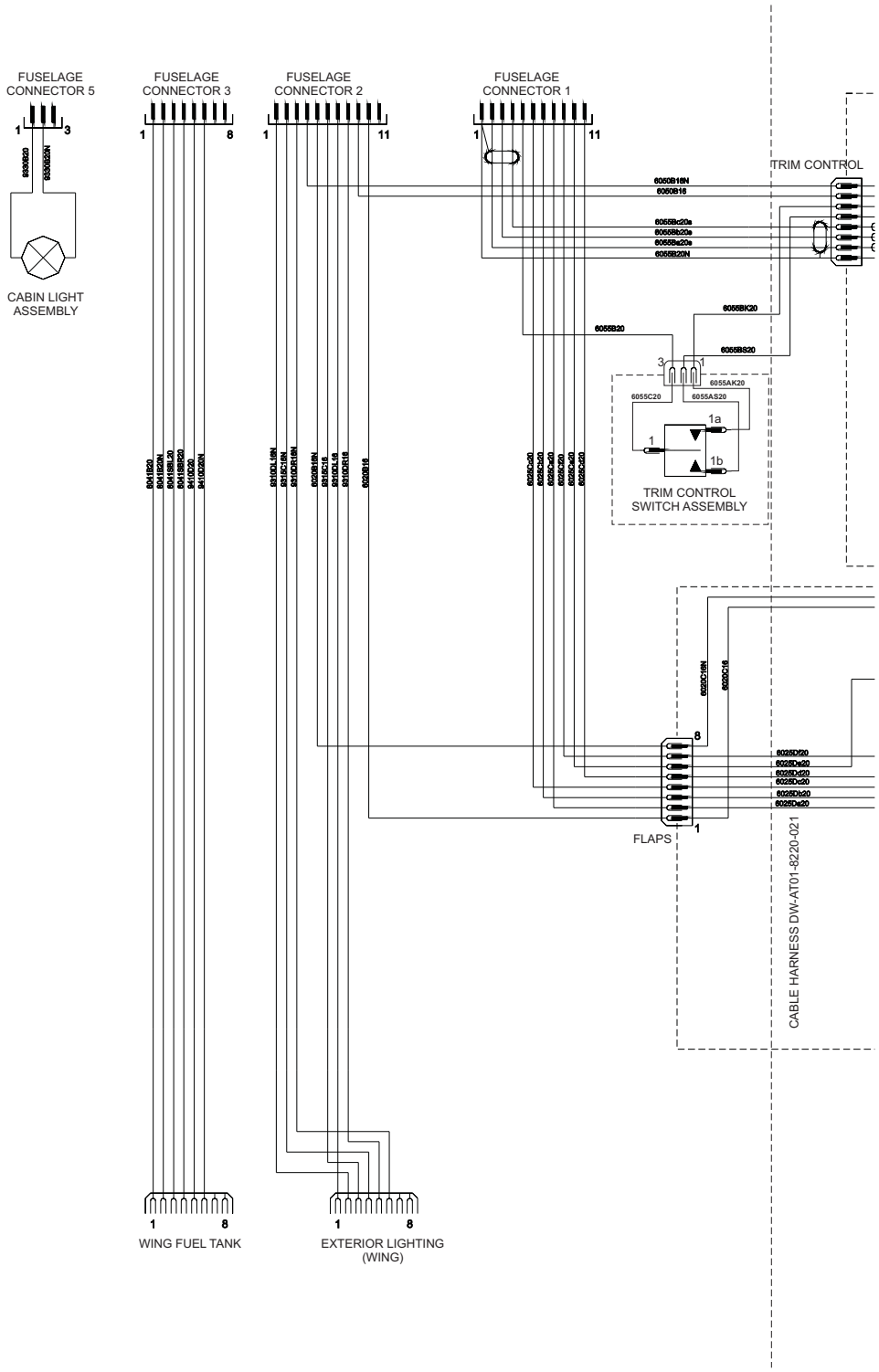


Fuselage Wiring Diagram
Figure 05(1)

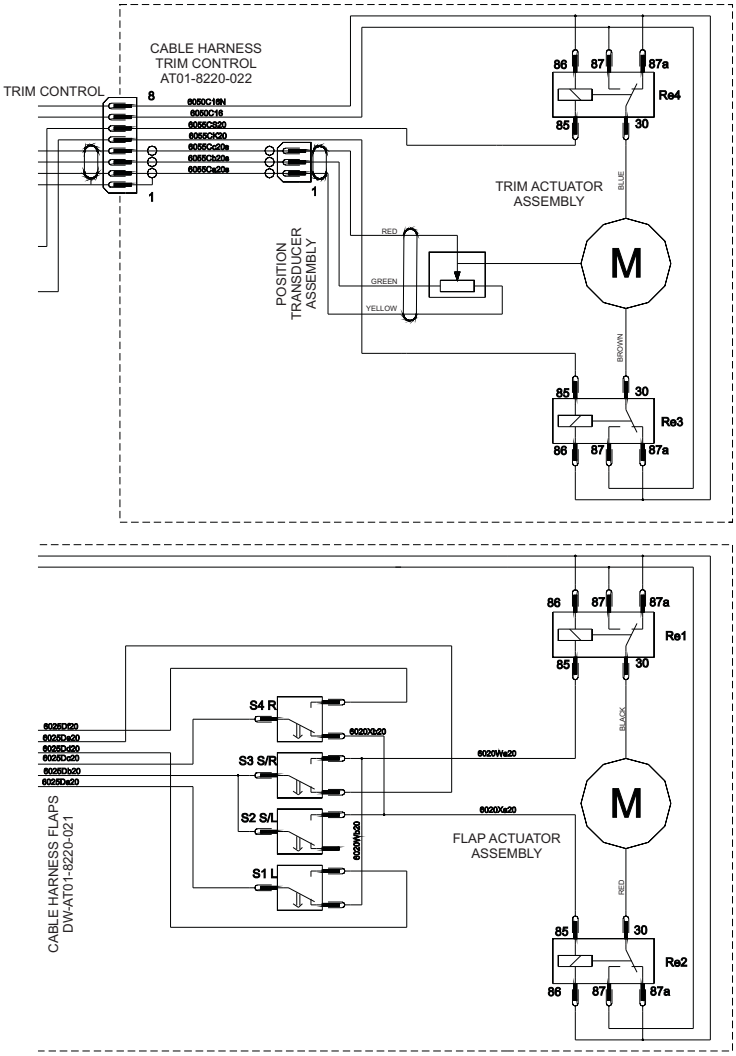


Fuselage Wiring Diagram
Figure 05(2)

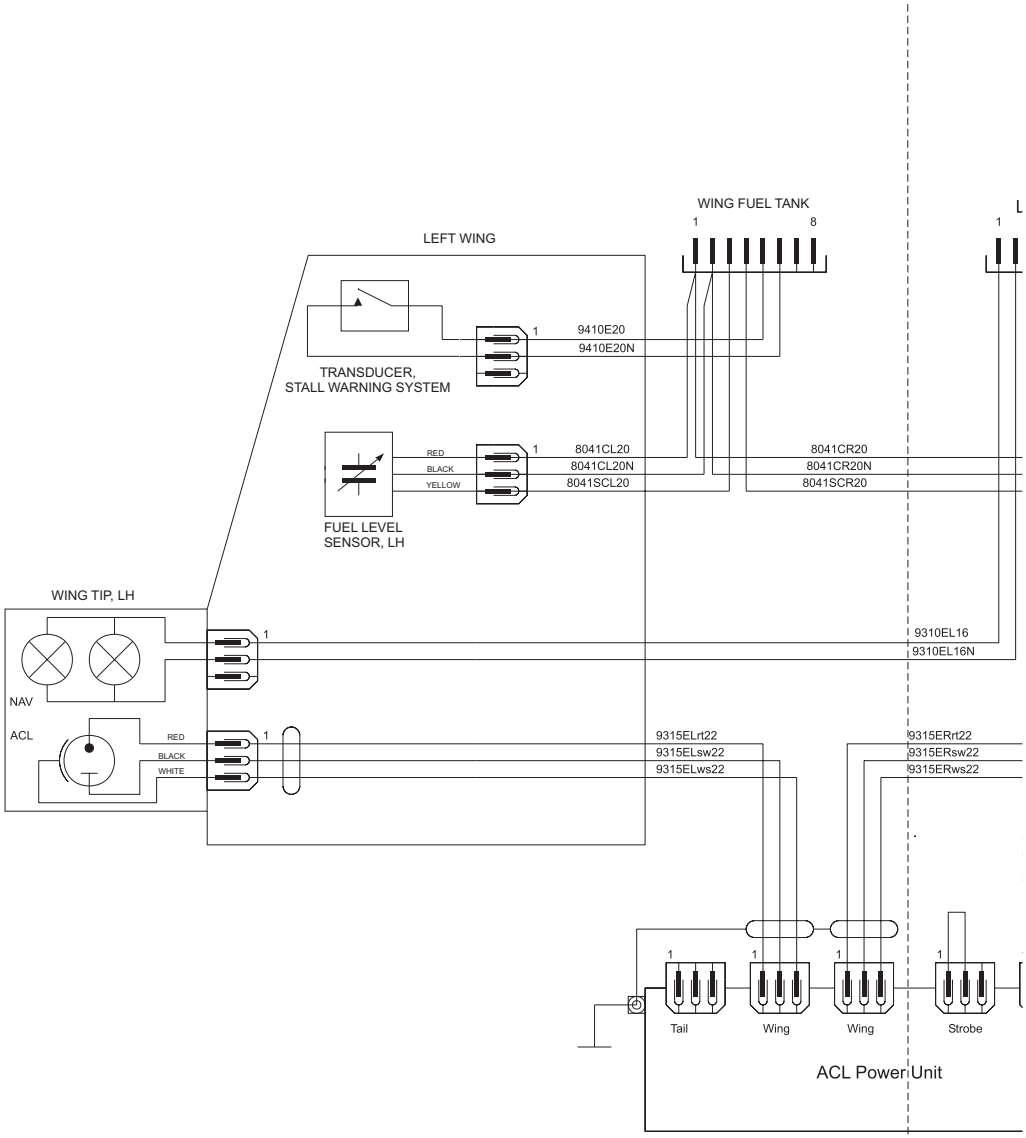


Wings Wiring Diagram
Figure 06(1)

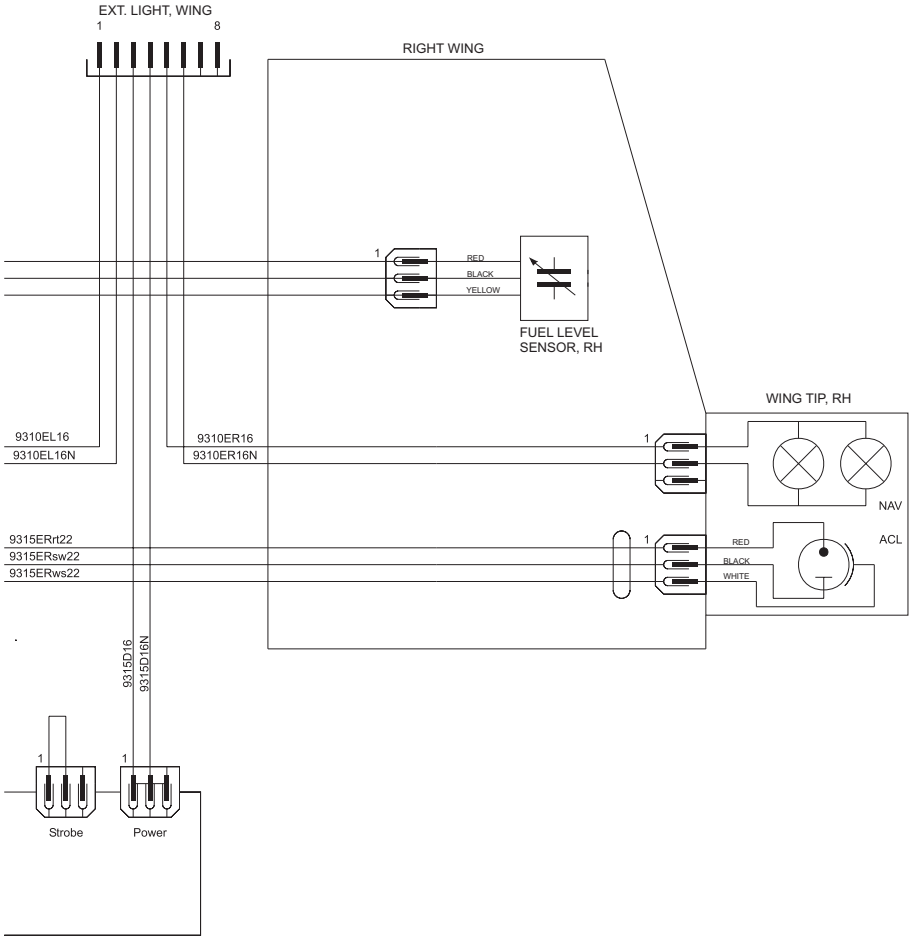


Wings Wiring Diagram
Figure 06(2)

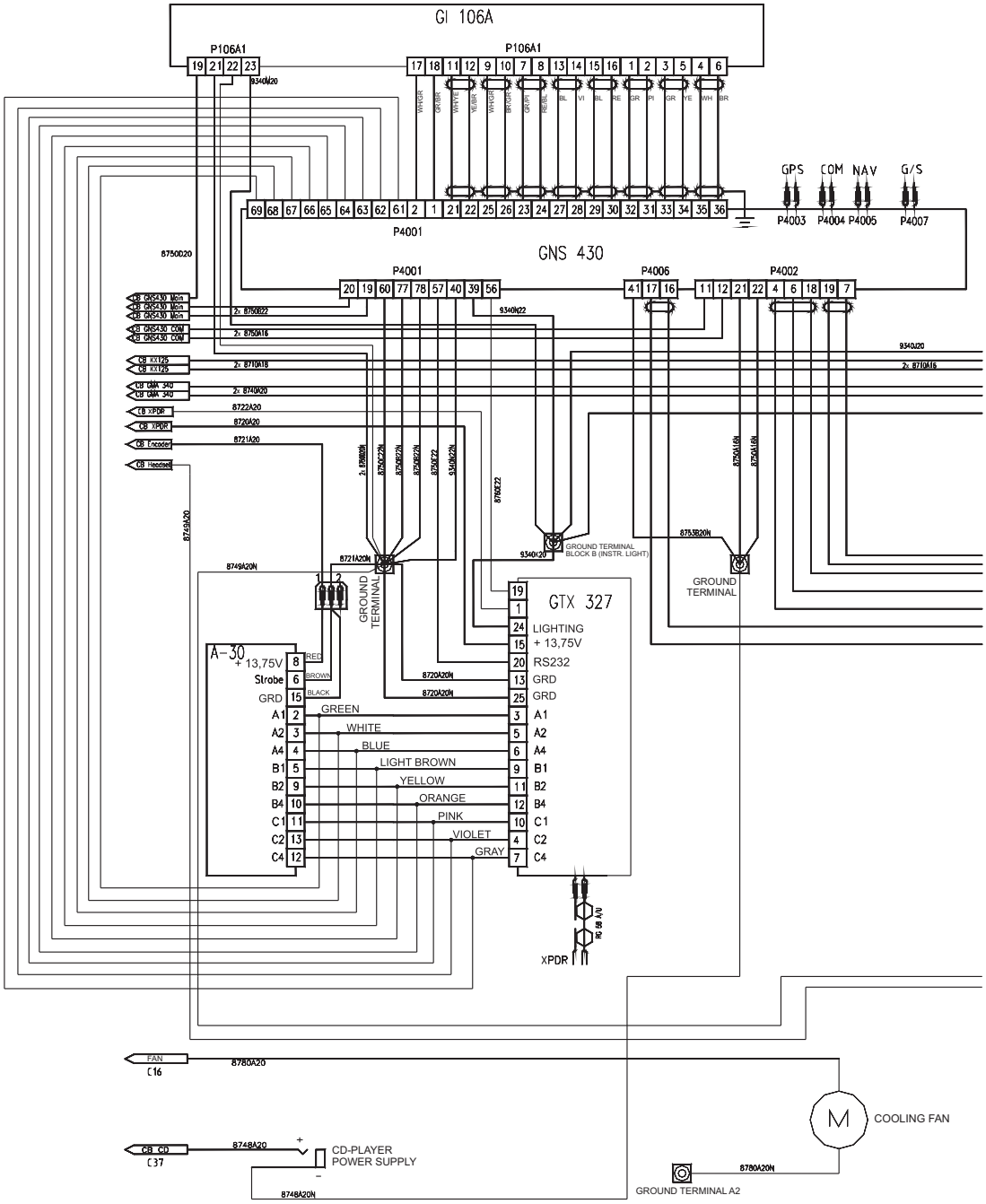


Avionics Wiring Diagram, Modification 1 (Instrument Panel)
Figure 07(1)

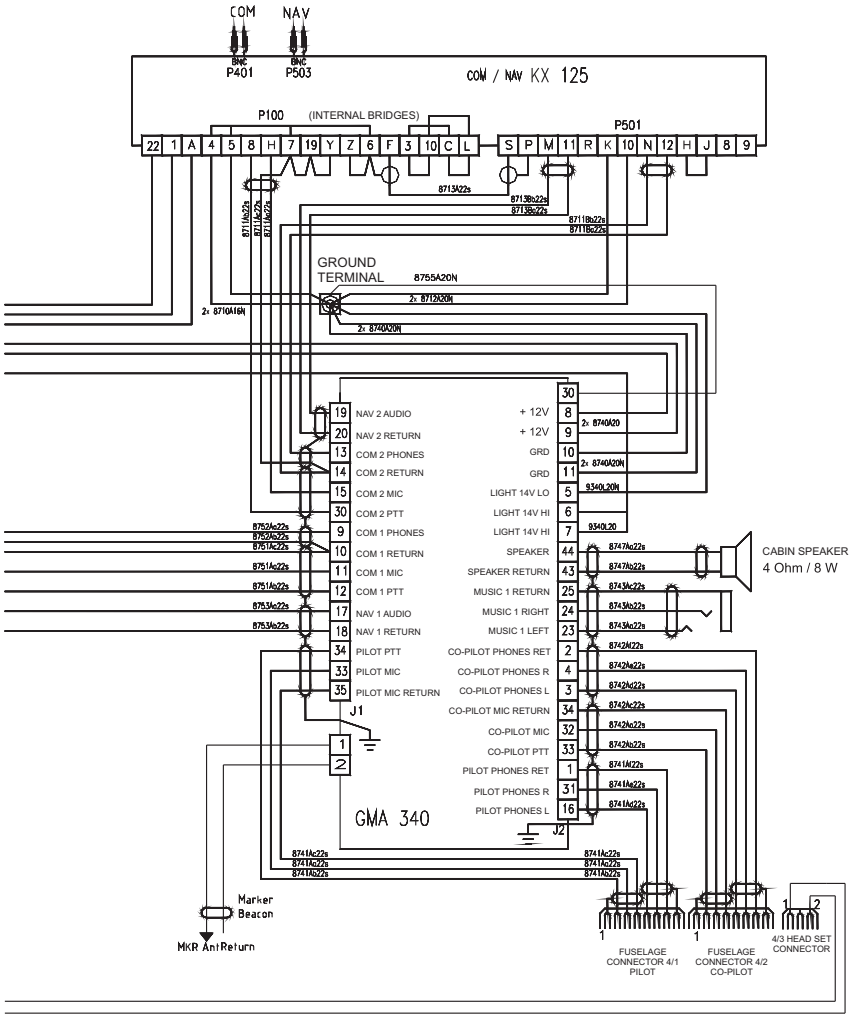


Avionics Wiring Diagram, Modification 1 (Instrument Panel)
Figure 07(2)

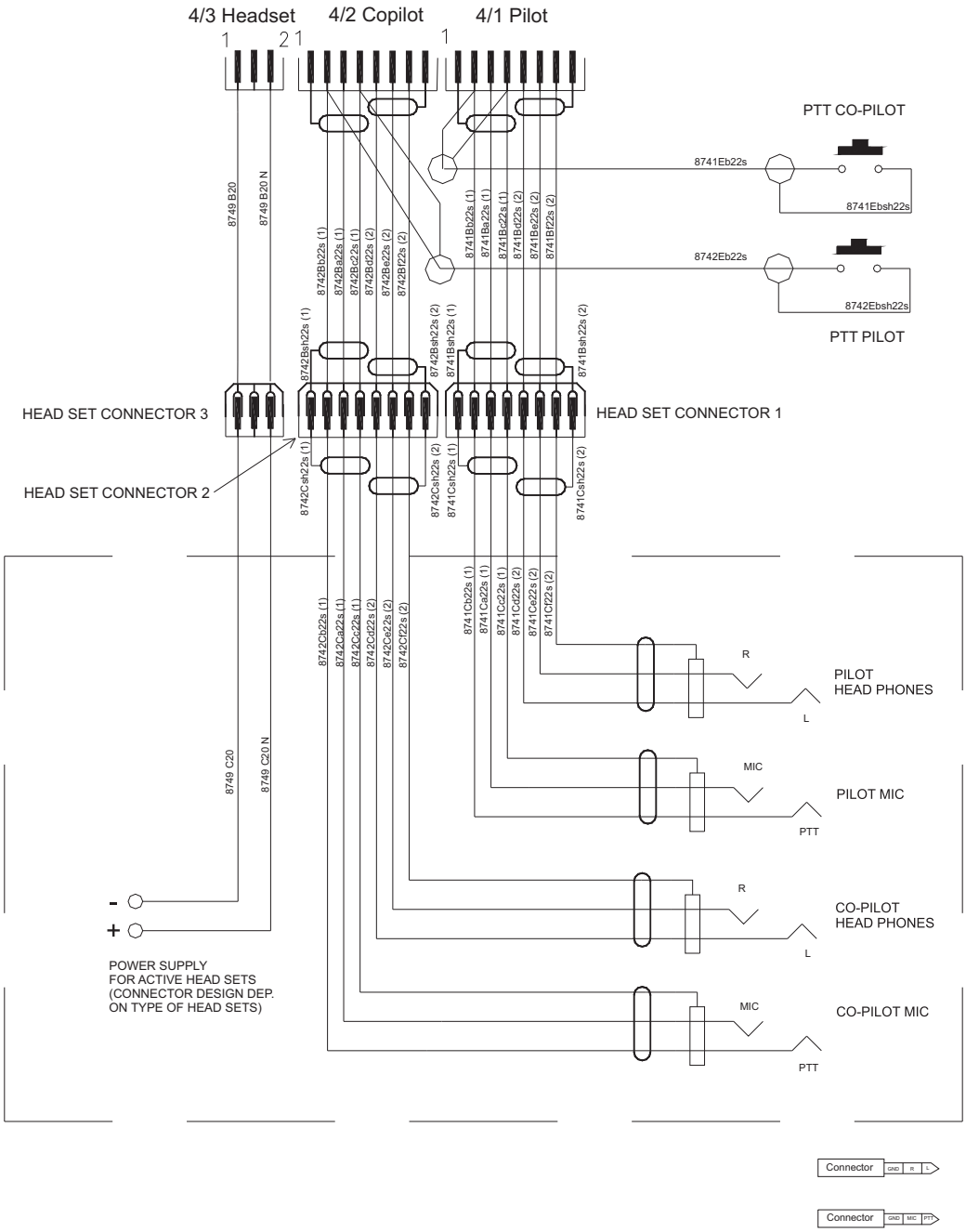


Avionics Wiring Diagram, Modification 1 (Fuselage)
Figure 08

Intentionally left blank

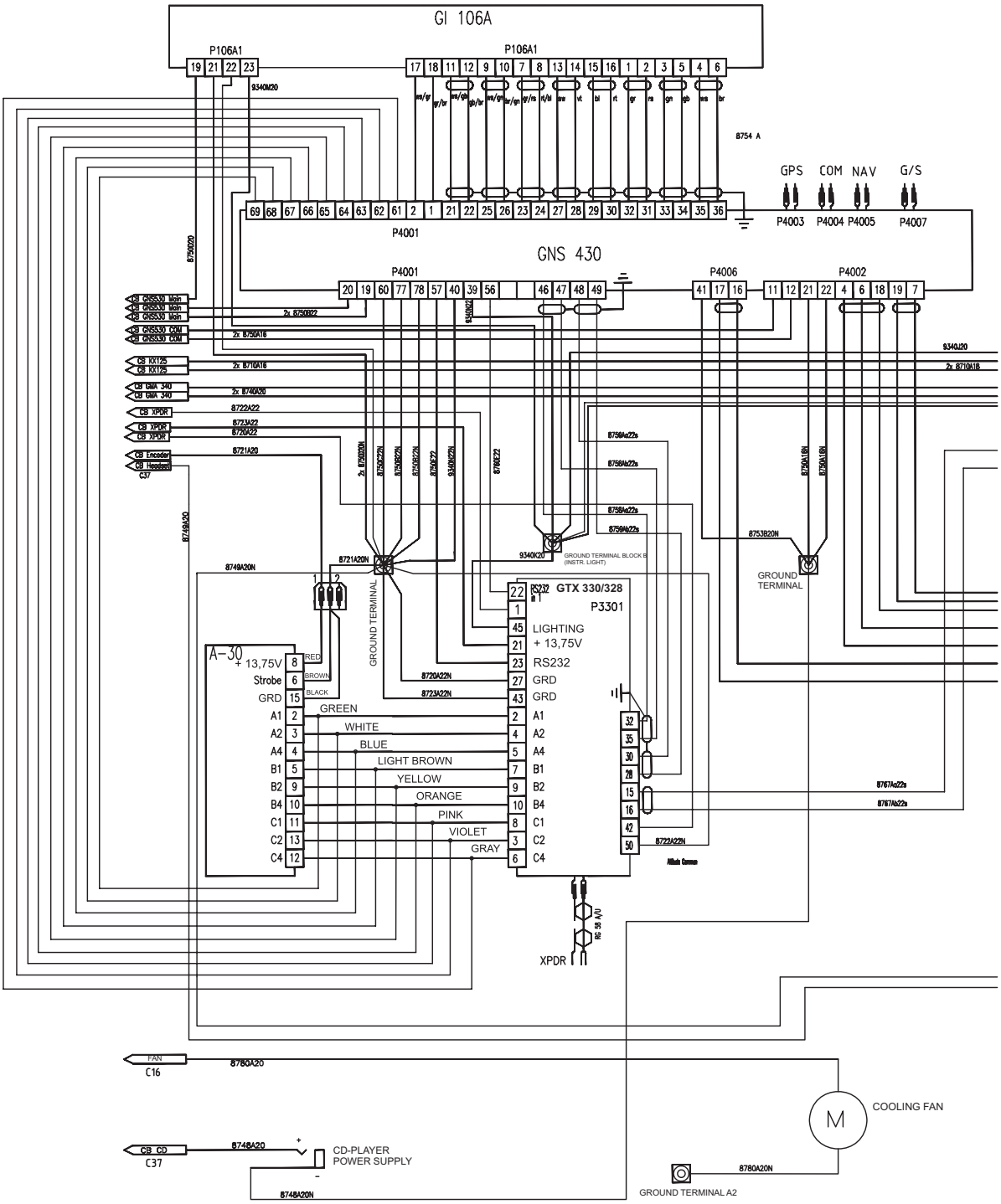


Avionics Wiring Diagram, Modification 2
Figure 09(1)

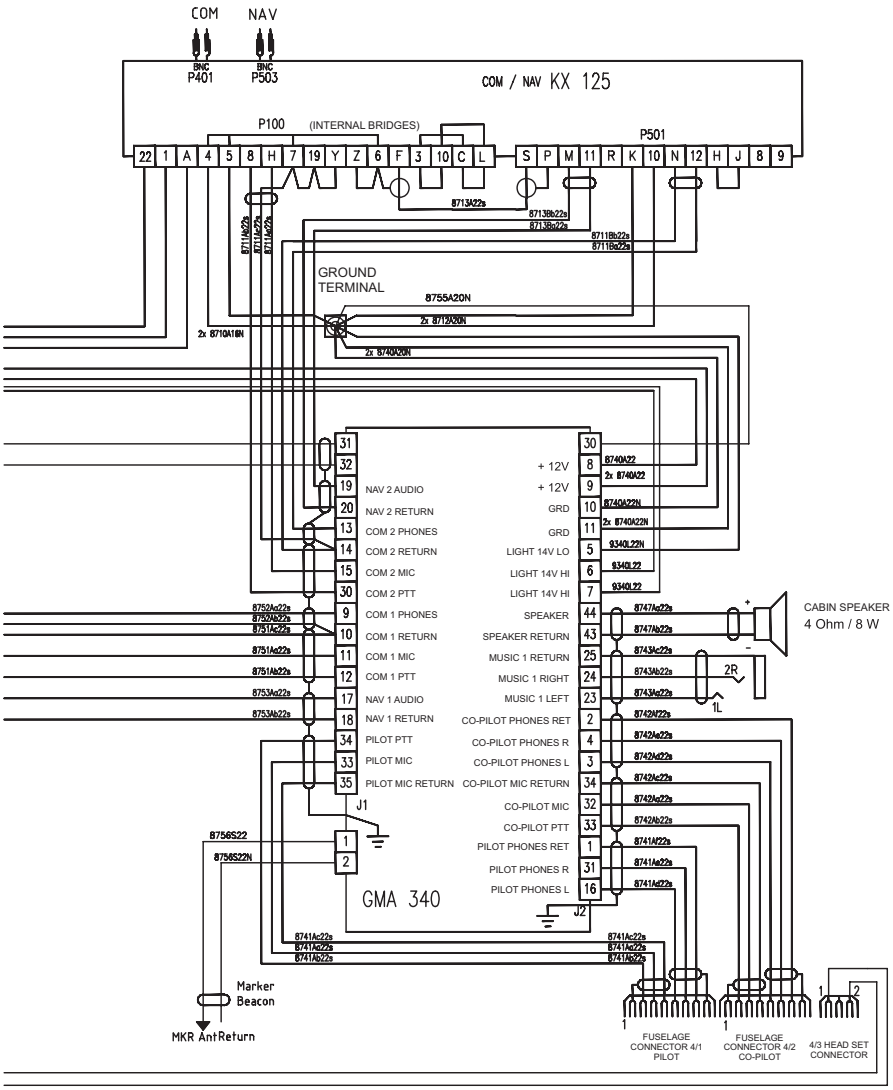


Avionics Wiring Diagram, Modification 2
Figure 09(2)

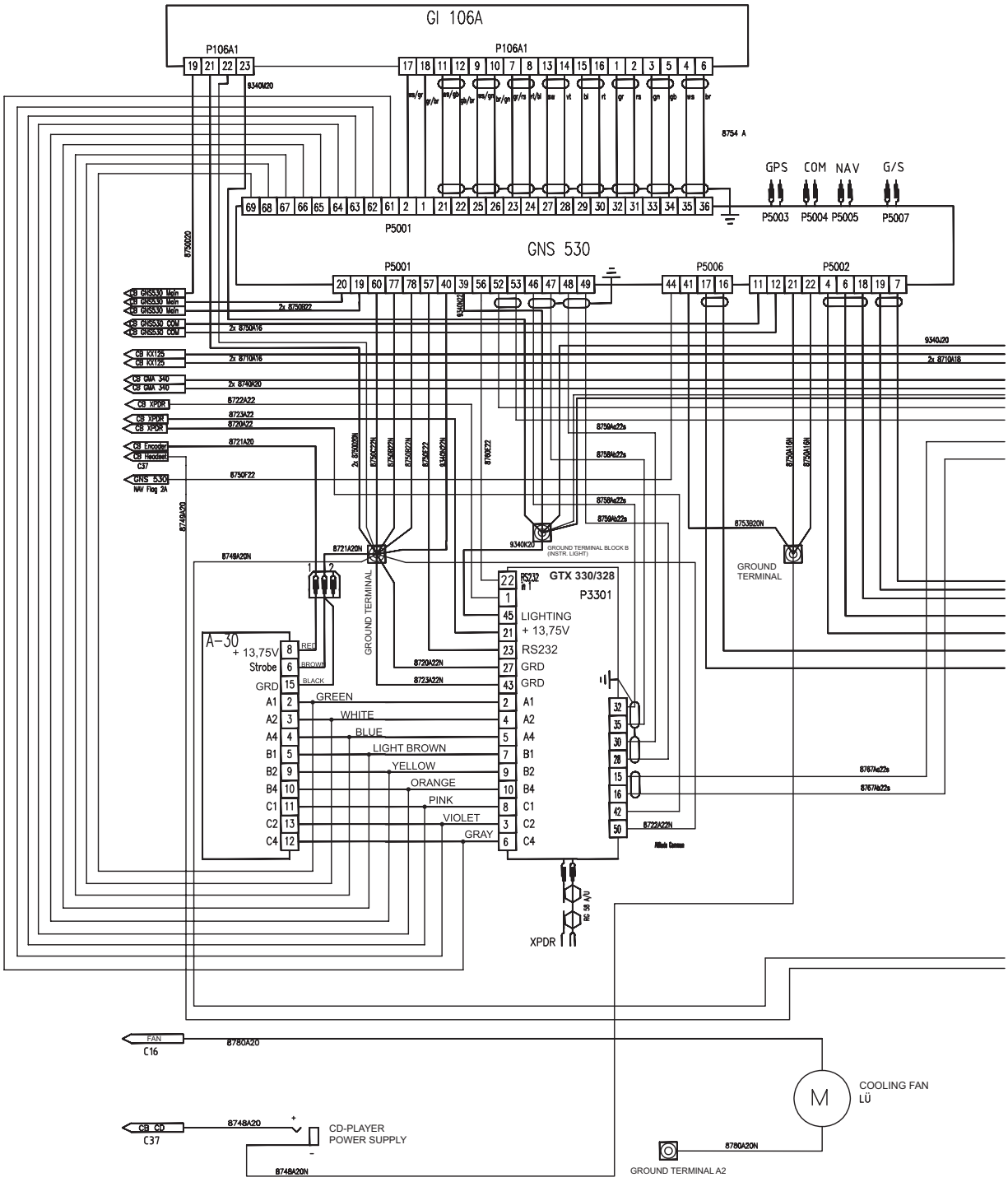


Avionics Wiring Diagram, Modification 3
Figure 10(1)

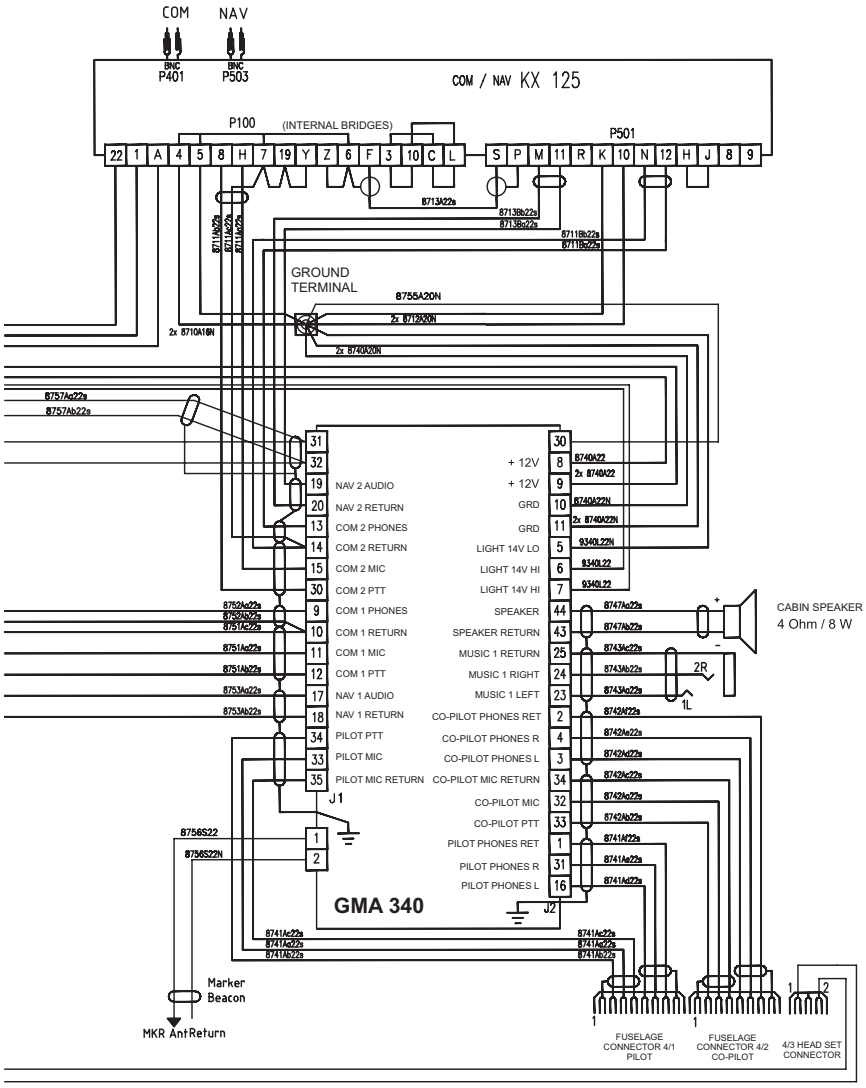


Avionics Wiring Diagram, Modification 3
Figure 10(2)

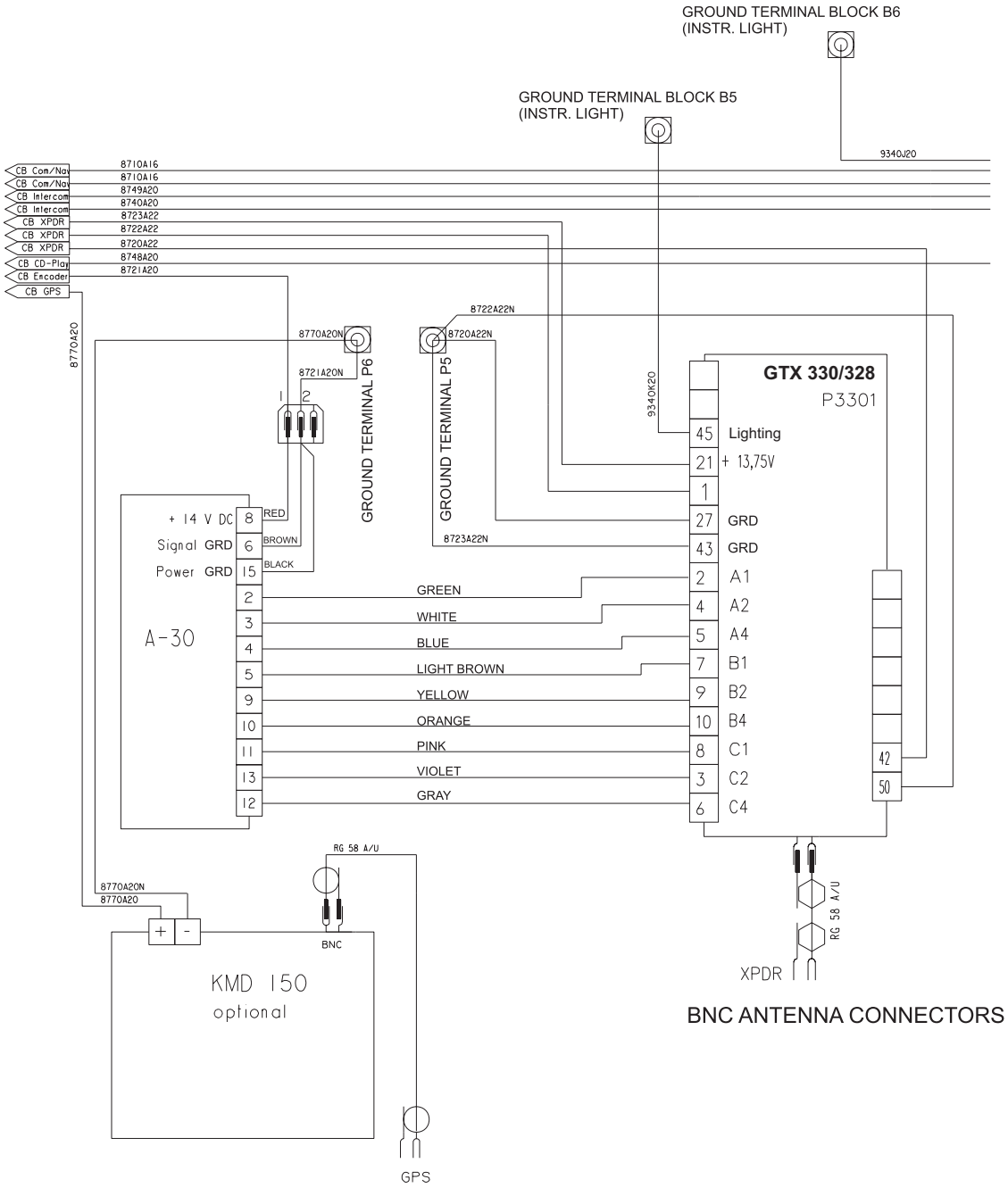


Avionics Wiring Diagram, Modification 4
Figure 11(1)

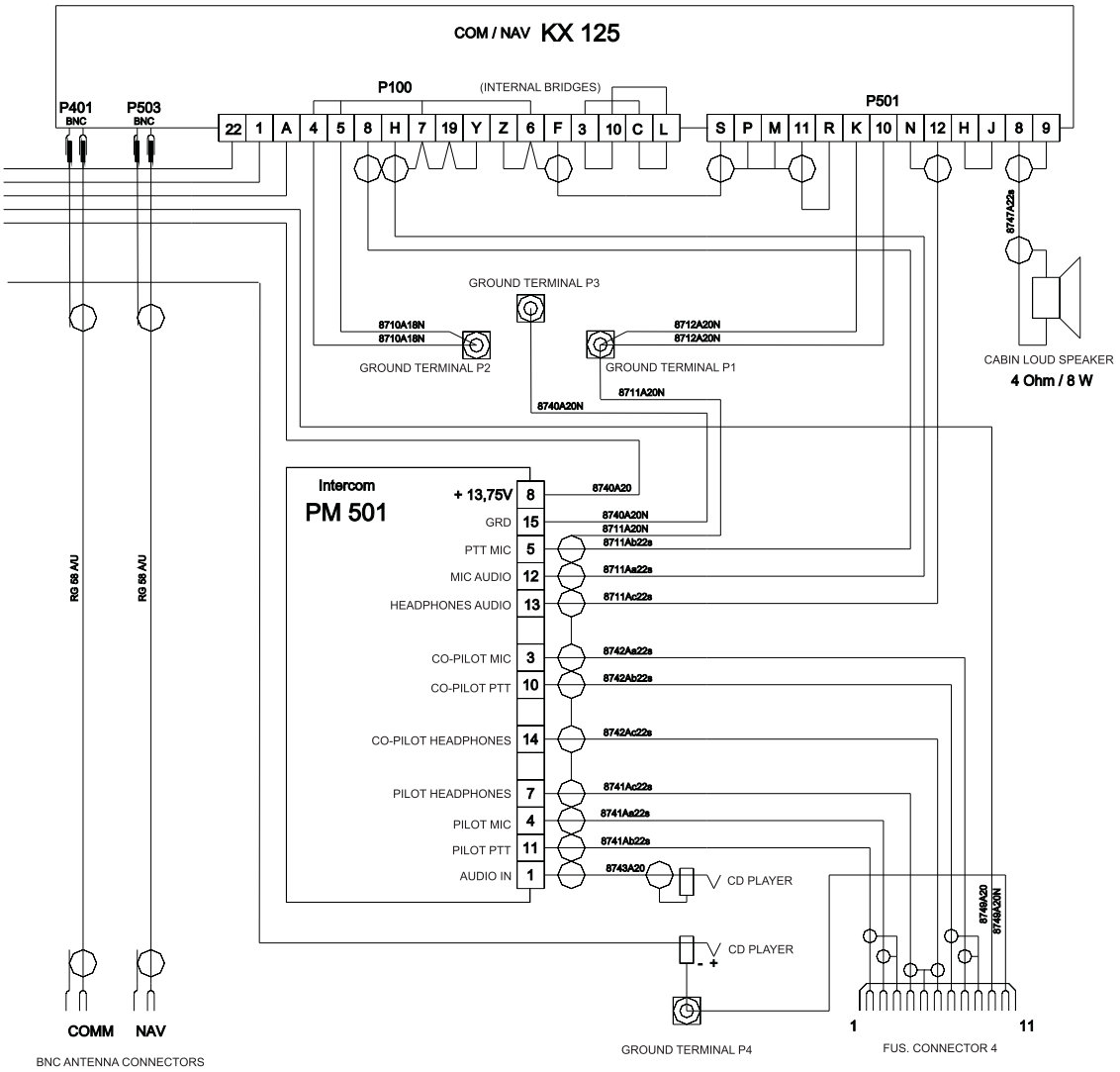


Avionics Wiring Diagram, Modification 4
Figure 11(2)

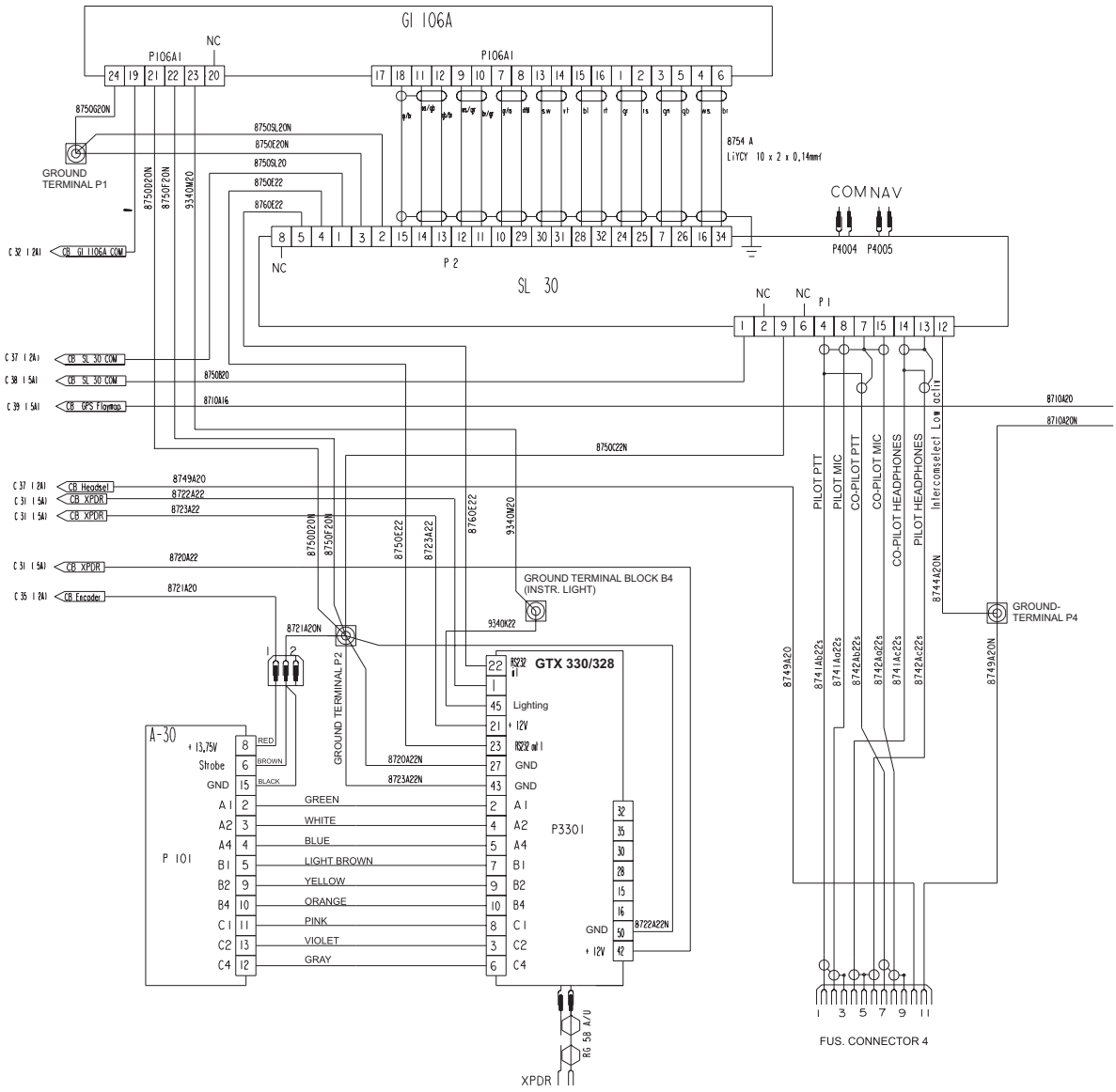


Avionics Wiring Diagram, Modification 5
Figure 12(1)

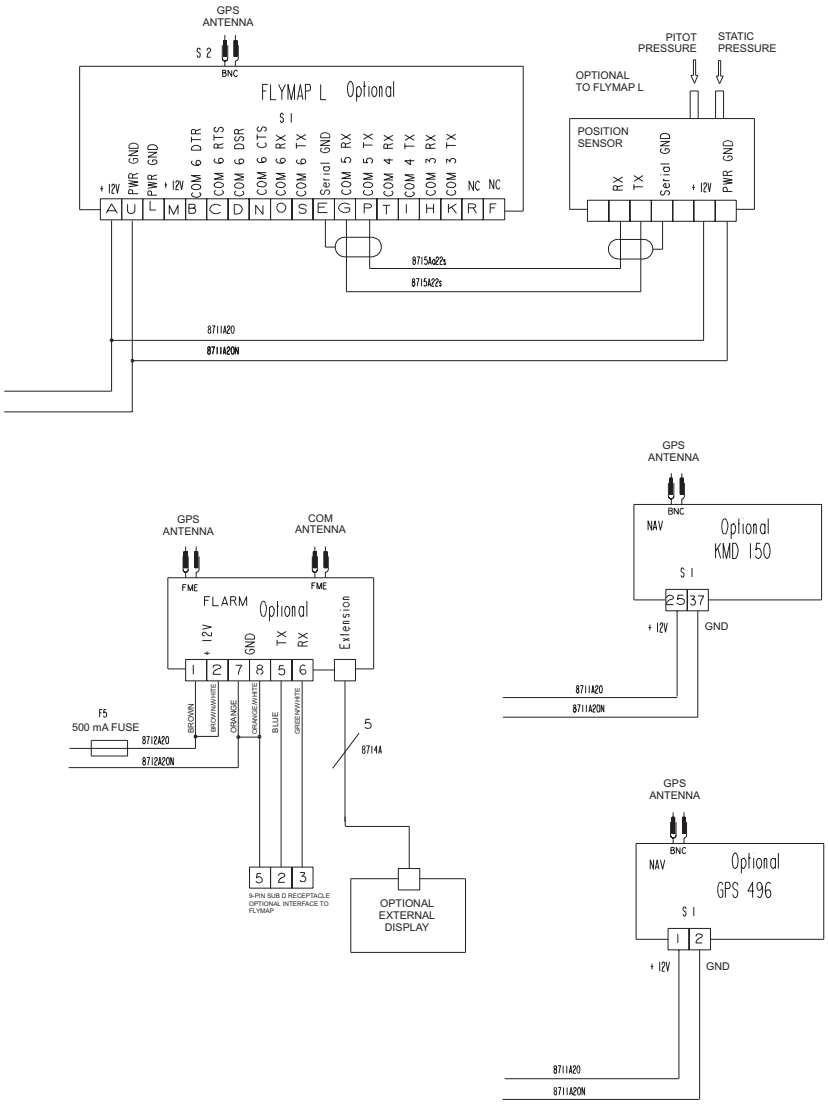


Avionics Wiring Diagram, Modification 5
Figure 12(2)